US 20060230688A1

(19) **United States**

(12) **Patent Application Publication** (10) **Pub. No.: US 2006/0230688 A1**

Carr (43) **Pub. Date: Oct. 19, 2006**

(54) **GUTTER OUTLET**

(76) Inventor: **Michael Norman Carr**, Queensland (AU)

Correspondence Address:
MOORE & VAN ALLEN PLLC
P.O. BOX 13706
Research Triangle Park, NC 27709 (US)

(21) Appl. No.: **10/556,190**

(22) PCT Filed: **Nov. 25, 2004**

(86) PCT No.: **PCT/AU04/01655**

(30) **Foreign Application Priority Data**

Nov. 25, 2003 (AU) 2003906496

Publication Classification

(51) **Int. Cl.**
E04D 13/08 (2006.01)

(52) **U.S. Cl.** **52/16**

(57) **ABSTRACT**

A gutter outlet (**10**) having a connecting portion (**12**) for attachment to a base wall of a gutter, and a downpipe connector portion (**13**) having at least one pair of spaced apart planar, substantially parallel sidewalls (**15**) and a pair of shaped sidewalls (**16**) adapted to allow attachment of various cross-sectional shape downpipes.

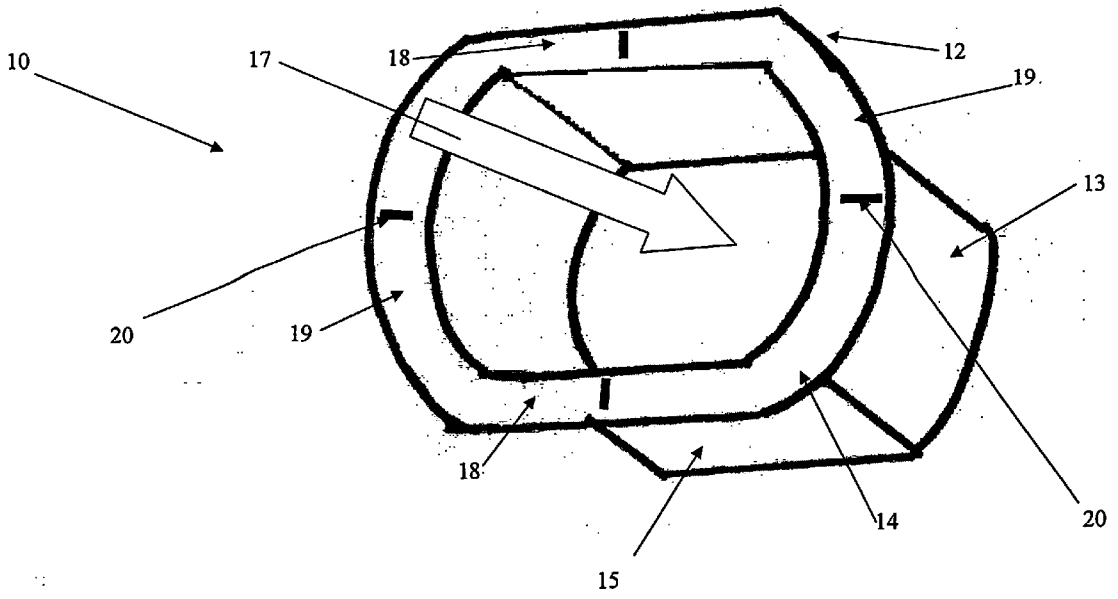

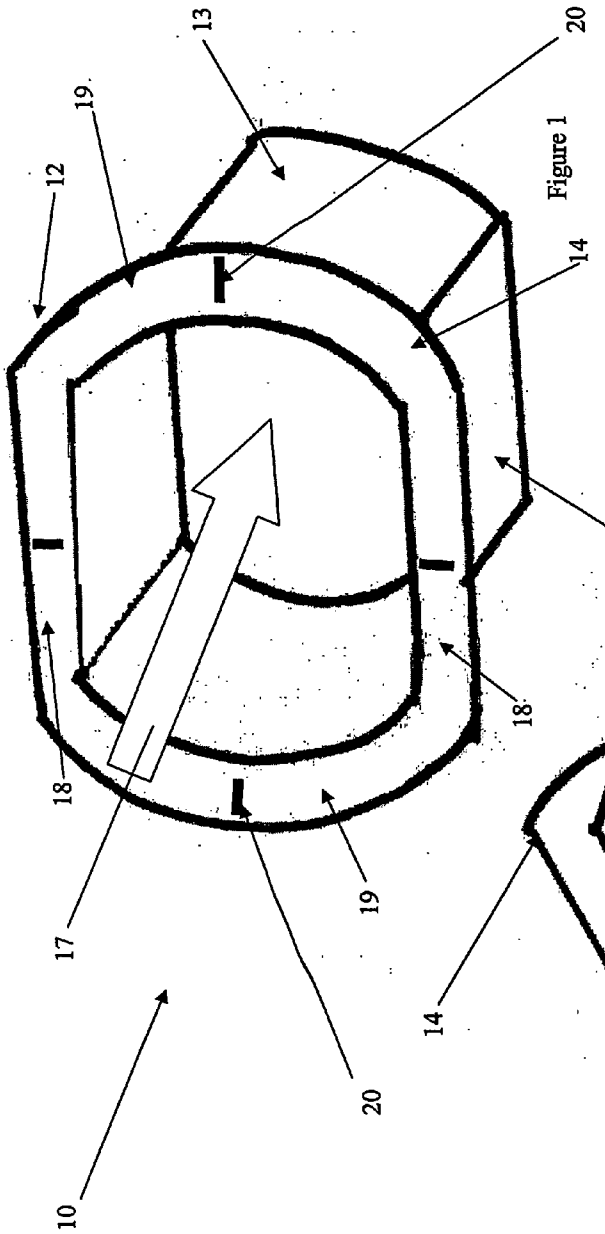

Figure 1

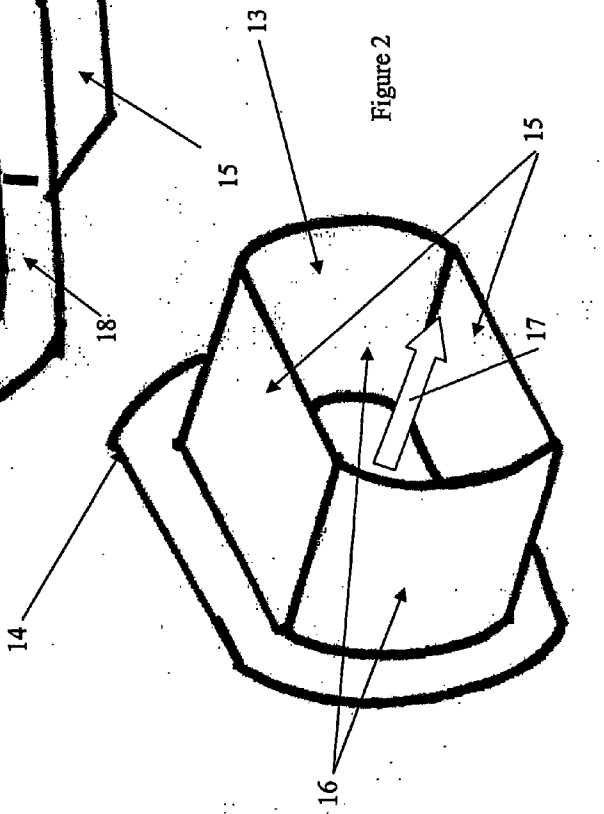

Figure 2

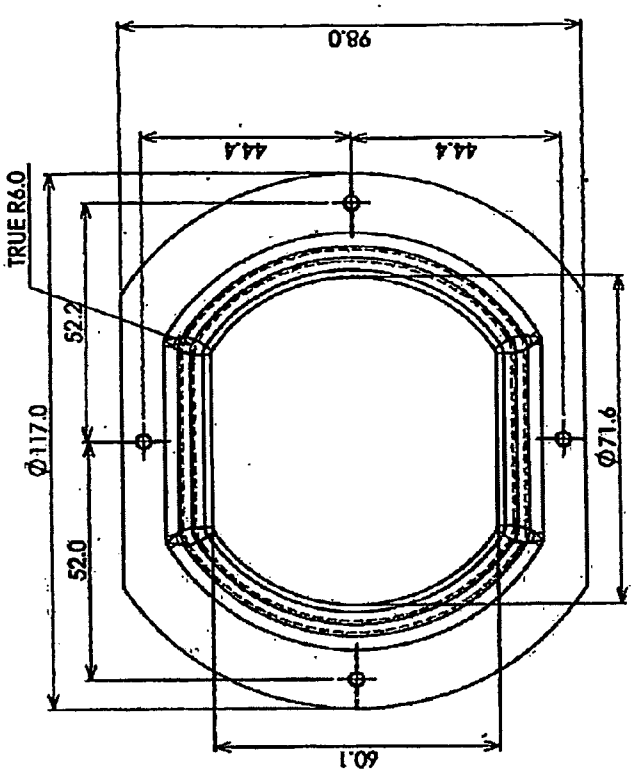

Figure 5

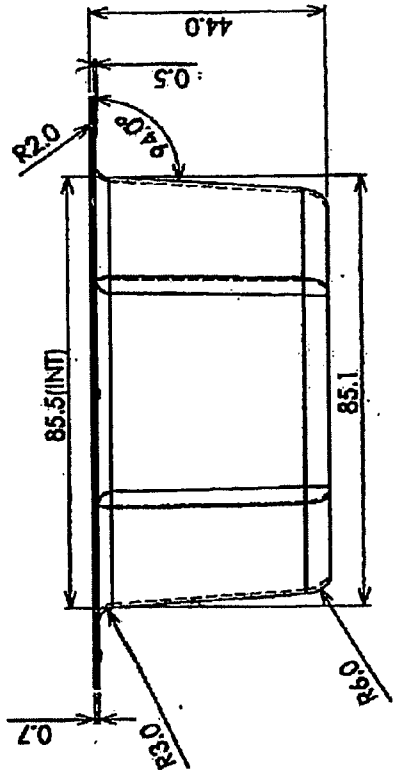

Figure 3

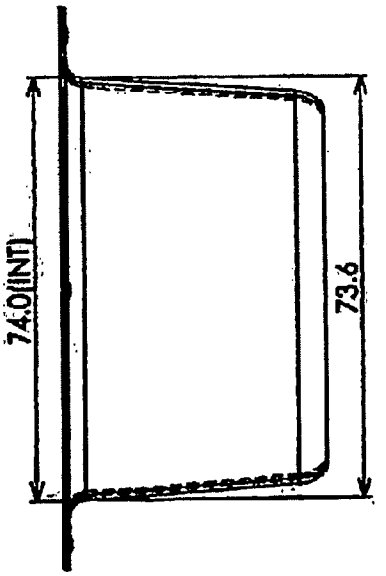

Figure 4

GUTTER OUTLET

FIELD OF THE INVENTION

[0001] The present invention relates to a gutter outlet. In particular, the invention relates to a gutter outlet for enabling improved convenience when fitting the gutter outlet in a roof gutter and/or the fitting of the downpipe thereto.

BACKGROUND ART

[0002] Gutter outlets are known in the art of roofing.

[0003] Gutter outlets are used in the construction of guttering systems for buildings. The guttering system is normally fitted adjacent to the facia or eaves of the building and abuts the edge of the sloping roof sheets in order to collect and direct water which lands on the roof during rain periods. The gutter is a generally U-shaped member and is generally provided with an opening in a base wall thereof to allow water to be directed out of the gutter. Generally, a substantially vertical pipe called a downpipe is associated with the opening in the gutter member to direct the water to a sewerage system or the like.

[0004] The gutter outlet is used to connect the gutter member to the downpipe.

[0005] The traditional gutter outlet is shaped and dimensioned depending upon the shape and dimension of not only the gutter into which it is fixed, but also the shape and dimension of the downpipe which will attach to the gutter outlet.

[0006] In the past, gutter outlets have been either circular or rectangular to correspond to the two main shapes of downpipes used, for example the rectangular tapered body formed from a single piece of sheet metal which includes a riveted seam, as described in U.S. Pat. No. 6,523,575 to Mrsny. A problem exists with the gutter outlet in that when a circular downpipe is used, the person fitting the gutter must use the circular gutter outlet. When a rectangular downpipe is used, the person fitting the gutter must use the rectangular gutter outlet. This requires both sets of gutter outlets to be carried, not only by the person fitting the downpipes, but also manufacturers, suppliers and the like. Often, fitters try to circumvent this problem by asking the owner of the building which downpipes are present. It is not often that the owner actually knows.

[0007] In addition to this problem, when replacing guttering or downpipes, quite often some components of the gutter are reused. If a circular downpipe is replaced with a rectangular downpipe and the gutter to which they are attached is not replaced, then the gutter will have a circular hole in the base wall of the gutter. When the fitter attempts to use the rectangular gutter outlet, the circular hole in the gutter prevents the rectangular gutter outlet from properly seating and/or sealing in the gutter. This leads to leaking of water through the opening. This problem can be overcome by forming an enlarged skirt to surround the skirt on the gutter outlet and cover the remainder of the circular hole, but this is tedious and time consuming.

[0008] Although various prior art gutter outlets are available, the present invention provides an improved design and simplification of a gutter outlet which provides a universal joint between a gutter and downpipe, that is less expensive to manufacture.

[0009] There is a need therefore, for a gutter outlet, shaped to allow use in both situations where either a rectangular or circular downpipe is used. The gutter outlet should allow the attachment of a circular downpipe or a rectangular downpipe. This would allow the manufacturer, supplier and fitter to make, sell and fit a single type of gutter outlet, thus saving costs and time.

[0010] It will be clearly understood that, if a prior art publication is referred to herein, this reference does not constitute an admission that the publication forms part of the common general knowledge in the art in Australia or in any other country.

SUMMARY OF THE INVENTION

[0011] The present invention is directed to a gutter outlet, which may at least partially overcome at least one of the abovementioned disadvantages or provide the consumer with a useful or commercial choice.

[0012] According to one aspect, the invention provides a gutter outlet having a connecting portion for attachment to a base wall of a gutter, and a downpipe connector portion having at least one pair of spaced apart planar, substantially parallel sidewalls and a pair of shaped sidewalls adapted to allow attachment of various cross-sectional shape downpipes.

[0013] In use, a rectangular downpipe may be attached to the gutter outlet using the pair of spaced apart planar, parallel sidewalls. Alternatively, a circular downpipe may be attached to the gutter using the pair of arcuate sidewalls. In each case, the respective sidewalls may be closely received by the walls of the downpipe used.

[0014] Furthermore, the selected material used to construct the gutter outlet of the invention is able to provide a far less prominent protruding lip inside the base of the gutter when compared to poly vinyl type counterparts. This allows for a more efficient and complete drainage of fluid from the gutter system. As the invention is typically constructed from sheet metal, the gutter outlet is less susceptible to UV degradation than poly vinyl products, and is also generally more durable and less expensive to produce.

[0015] The gutter outlet may be manufactured to suit various sized downpipes such as circular downpipe between 50 to 100 mm and rectangular downpipe sized between 100 mm in length and 50 mm wide up to 100 mm in length and 100 mm in width.

[0016] The shaped sidewalls may be arcuate, rounded or segmented sidewalls. The invention may further comprise a leaf catcher or separating device or member to separate the water flowing into the downpipe from leaves or other detritus.

[0017] Preferably, the gutter outlet will have a longitudinal dimension greater than its width. The pair of spaced apart planar, parallel sidewalls will suitably be oriented parallel with the longitudinal dimension. A flow passage suitably extends through the gutter outlet

[0018] Preferably, the connecting portion has a capsule-shaped outlet and, when the connecting portion is attached to the base wall of the gutter, the major axis of the capsule-shaped outlet extends along the base wall of the gutter whilst the minor axis of the capsule-shaped outlet extends across the base wall.

[0019] Preferably, the connecting portion may be a flange which extends around the outlet. The flange may have a sealant groove. Suitable sealant may be deposited in the groove to allow the flange to be mounted to the base wall of the gutter and sealed relative thereto. A corresponding capsule-shaped opening may be formed in the base wall of the gutter so that water in the gutter may communicate with the flow passage through the gutter outlet. The flange may be of any shape but will suitably be adapted to seal the gutter outlet in any shaped hole through the gutter.

[0020] The shape of the flange may suitably match the shape of the downpipe connector. Accordingly, the flange may have longitudinal and transverse surfaces. These surfaces may be sized to allow a degree of adjustment in position of the gutter outlet in the hole in the gutter.

[0021] The flange may have markings thereon to assist with the location of the gutter outlet in the gutter. These markings may include central markings on at least one of the longitudinal or transverse flange surfaces. Attachment points may also be marked for the convenience of the fitter.

[0022] Suitably, the downpipe connector portion may extend downwardly from the connecting portion.

[0023] The downpipe connector portion may be a spout. Preferably the downpipe connector has external diameter which allows the attachment of both standard circular downpipe and standard rectangular downpipe thereto. The downpipe connector portion may converge slightly as it extends away from the connector portion.

[0024] The downpipe connector may be provided as two concentric downpipe connector portions forming a first inner downpipe connector and a second outer downpipe connector. The first and second downpipe connector may be of the same length but it is preferred that the inner downpipe connector be longer than the second outer downpipe connector. A downpipe may be received within the two downpipe connector. The width of the annular space between the two downpipe connectors may be such that downpipes of two sizes may be accommodated by the gutter outlet of the invention. A downpipe of a first size may fit between the two downpipe connector and have its internal surface abut the external surface of the inner downpipe connector. A downpipe of a size greater than the first size may fit between the two downpipe connectors and its external surface may abut the internal surface of the outer downpipe connector.

[0025] According to a particularly preferred embodiment of the invention, the gutter outlet may be formed from a sheet metal blank. Most preferably, the gutter outlet of the invention is manufactured using a process called "cold drawing" or deep drawing. Cold drawing is a process normally applied to formation of metal wire but may be applied to the formation of metal parts from a unitary metal blank. The process occurs by drawing the material through a die without any pre-heating. The process changes the mechanical properties of the metal and the finished product is accurate to size, free from scale with a bright surface finish.

[0026] The process of deep drawing is most commonly used to manufacture car body parts and sinks. Deep drawing is a cold forming process in which a flat blank of sheet metal is shaped by the action of a punch forcing the metal into a die cavity. Deep drawing differs from other drawing processes in that the depth of the drawn part can be greater than its diameter. Deep drawing requires the use of ductile sheet metal and is capable of high volume production.

[0027] The metal used for the gutter outlet of the present invention is preferably a galvanised metal such as light gauge steel or similar.

[0028] By having the gutter outlet configured in this way it may be used with downpipes of two distinct sizes and also two distinct shapes.

BRIEF DESCRIPTION OF THE DRAWINGS

[0029] Various embodiments of the invention will be described with reference to the following drawings, in which:

[0030] **FIG. 1** is a top perspective view of a gutter outlet according to an embodiment of the invention;

[0031] **FIG. 2** is a bottom perspective view of the gutter outlet of **FIG. 1**;

[0032] **FIG. 3** is a side elevation view of a gutter outlet according to a preferred embodiment of the invention with example dimensions;

[0033] **FIG. 4** is an end elevation view of the gutter outlet illustrated in **FIG. 3**; and

[0034] **FIG. 3** is a top elevation view of the gutter outlet illustrated in **FIG. 3**.

DETAILED DESCRIPTION OF THE INVENTION

[0035] According to the invention, a gutter outlet **10** is provided.

[0036] The gutter outlet **10** of **FIG. 1** includes a connecting portion **12** and a downpipe connector **13** extending from the connecting portion **12**. The connecting portion has a surrounding flange **14**.

[0037] The downpipe connector portion **13** has at least one pair of spaced apart planar, parallel sidewalls **15** and a pair of arcuate sidewalls **16**.

[0038] In use, a rectangular downpipe (not shown) can be attached to the gutter outlet **10** using the pair of spaced apart planar, parallel sidewalls **15**. Alternatively, a circular downpipe (not shown) can be attached to the gutter outlet using the pair of arcuate sidewalls **16**. In each case, the respective sidewalls are closely received by the walls of the downpipe used.

[0039] The gutter outlet **10** has a longitudinal dimension greater than its width. The pair of spaced apart planar, parallel sidewalls **15** are oriented parallel with the longitudinal dimension. A flow passage **17** extends through the gutter outlet **10**.

[0040] The connecting portion **12** has a capsule-shaped outlet and, when the connecting portion **12** is attached to the base wall of the gutter, the major axis of the capsule-shaped outlet extends along the base wall of the gutter whilst the minor axis of the capsule-shaped outlet extends across the base wall.

[0041] The connecting portion has a surrounding flange **14** which extends around the outlet. The flange will be flush

with the base wall of the gutter when in place. A corresponding capsule-shaped opening will generally be formed in the base wall of the gutter so that water in the gutter may communicate with the flow passage **17** through the gutter outlet **10**. Due to the shape of the flange **14** it is adapted to seal the gutter outlet **10** in any shaped hole through the gutter.

[**0042**] The flange **14** may be planar in order to be accepted by a flat base gutter. Alternatively the flange **14** may be formed to suit a gutter containing an other than flat base. For example, the cross section of the flange may take an arc shape to suit a gutter base with an arc type cross sectional profile.

[**0043**] The shape of the flange **14** matches the shape of the downpipe connector **13**. Accordingly, the flange has longitudinal **18** and transverse **19** surfaces

[**0044**] The flange has markings thereon **20** to assist with the location of the gutter outlet in the gutter. These markings include central markings on at least one of the longitudinal or transverse flange surfaces.

[**0045**] The downpipe connector **12** has external diameter which allows the attachment of both standard circular downpipe and standard rectangular downpipe thereto. The downpipe connector portion **13** converges slightly as it extends away from the connector portion **12**.

[**0046**] By having the gutter outlet **10** configured in this way it may be used with downpipes of two distinct sizes and also two distinct shapes.

[**0047**] **FIG. 2** shows a bottom perspective view of the gutter outlet **10**.

[**0048**] In the present specification, the word "comprising" and its derivatives including "comprises" and "comprise" include each of the stated integers but does not exclude the inclusion of one or more further integers.

[**0049**] Reference throughout this specification to "one embodiment" or "an embodiment" means that a particular feature, structure, or characteristic described in connection with the embodiment is included in at least one embodiment of the present invention. Thus, the appearance of the phrases "in one embodiment" or "in an embodiment" in various places throughout this specification are not necessarily all referring to the same embodiment. Furthermore, the particular features, structures, or characteristics may be combined in any suitable manner in one or more combinations.

[**0050**] In compliance with the statute, the invention has been described in language more or less specific to structural or methodical features. It is to be understood that the invention is not limited to specific features shown or described since the means herein described comprises preferred forms of putting the invention into effect. The invention is, therefore, claimed in any of its forms or modifications within the proper scope of the appended description appropriately interpreted by those skilled in the art.

1. A gutter outlet having a connecting portion for attachment to a base wall of a gutter, and a downpipe connector portion having at least one pair of spaced apart planar, substantially parallel sidewalls and a pair of shaped sidewalls adapted to allow attachment of various cross-sectional shape downpipes.

2. A gutter outlet according to claim 1 wherein the outlet is adapted to be mounted to an internally surface of a gutter.

3. A gutter outlet according to claim 1 wherein the shaped sidewalls are arcuate.

4. A gutter outlet according to claim 1 further comprising a leaf catcher or separating device or member to separate the water flowing into the downpipe from leaves or other detritus.

5. A gutter outlet according to claim 1 wherein the gutter outlet has a longitudinal dimension greater than its width and the pair of spaced apart planar, parallel sidewalls are oriented parallel with the longitudinal dimension.

6. A gutter outlet according to claim 1 wherein the connecting portion has a capsule-shaped outlet and, when the connecting portion is attached to a base wall of the gutter, the major axis of the capsule-shaped outlet extends along the base wall of the gutter whilst the minor axis of the capsule-shaped outlet extends across the base wall.

7. A gutter outlet according to claim 1 wherein the connecting portion is flange which extends around the outlet.

8. A gutter outlet according to claim 7 wherein the shape of the flange matches the shape of the downpipe connector portion.

9. A gutter outlet according to claim 7 wherein the flange has markings thereon to assist with the location of the gutter outlet in the gutter.

10. A gutter outlet according to claim 1 wherein the gutter outlet is manufactured using a deep drawing process.

* * * * *