US008566951B2

(12) **United States Patent**
Horiuchi et al.

(10) **Patent No.: US 8,566,951 B2**
(45) **Date of Patent: Oct. 22, 2013**

(54) **APPARATUS AND METHODS FOR SETTING SECURITY TO STORAGE UNIT AND COMPUTER**

(75) Inventors: **Yasuhiro Horiuchi**, Yamato (JP); **Kohsuke Ohtani**, Tokyo-to (JP); **Kazunobu Umeda**, Machida (JP)

(73) Assignee: **Lenovo (Singapore) Pte. Ltd.**, Singapore (SG)

(*) Notice: Subject to any disclaimer, the term of this patent is extended or adjusted under 35 U.S.C. 154(b) by 1069 days.

(21) Appl. No.: **12/110,279**

(22) Filed: **Apr. 25, 2008**

(65) **Prior Publication Data**

US 2008/0276059 A1 Nov. 6, 2008

(30) **Foreign Application Priority Data**

Apr. 26, 2007 (JP) 2007-117618

(51) **Int. Cl.**
G06F 7/04 (2006.01)

(52) **U.S. Cl.**
USPC **726/27**

(58) **Field of Classification Search**
USPC 713/1, 2; 726/5, 18, 27
See application file for complete search history.

(56) **References Cited**

U.S. PATENT DOCUMENTS

5,432,950 A * 7/1995 Sibigtroth 711/163
7,350,067 B2 * 3/2008 Spottswood 713/1
7,818,789 B2 * 10/2010 Beilinson et al. 726/4
2003/0009697 A1 * 1/2003 Uehata et al. 713/201
2006/0070123 A1 * 3/2006 Camilli 726/16
2007/0271597 A1 * 11/2007 Venkatachalam et al. 726/4
2008/0083037 A1 * 4/2008 Kruse et al. 726/27
2009/0216979 A1 * 8/2009 Balasubramanian et al. 711/163

FOREIGN PATENT DOCUMENTS

JP	2002-251324	6/2002
JP	2003-233538	8/2003
JP	2004-047041	2/2004
JP	2006-309296	9/2006
JP	2007-012123	1/2007
JP	2007-207352	8/2007

* cited by examiner

Primary Examiner — Peter Shaw

(74) *Attorney, Agent, or Firm* — Ference & Associates LLC

(57) **ABSTRACT**

Methods and apparatus are provided for inhibiting data writing to an optical disc drive connected to a computer. A BIOS confirms presence of a security function of an optical disc drive. When the optical disc drive possesses the security function, the BIOS delivers a command to the optical disc drive to set it to a read-only mode. The optical disc drive that has received the command sets the drive per se to operate in the read-only mode. Since a command for setting it to the read-only mode and a command for releasing it are delivered to the optical disc drive only by the BIOS, when a control is transferred to an Operating System (OS), setting of the read-only mode cannot be released by the OS and other OS's, or application software.

16 Claims, 5 Drawing Sheets

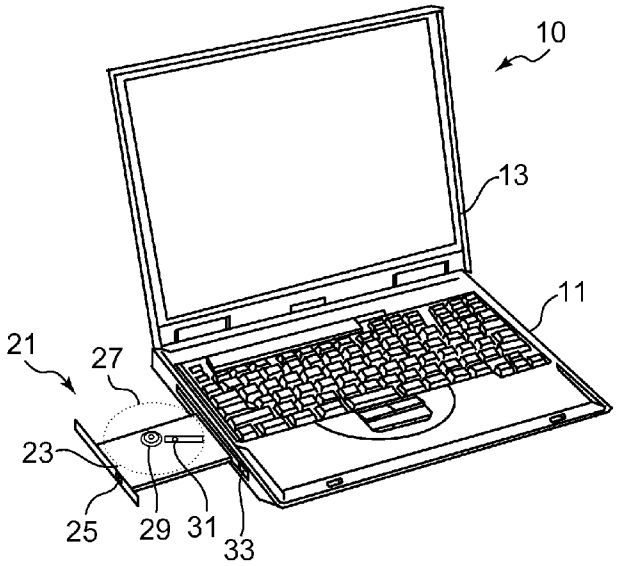

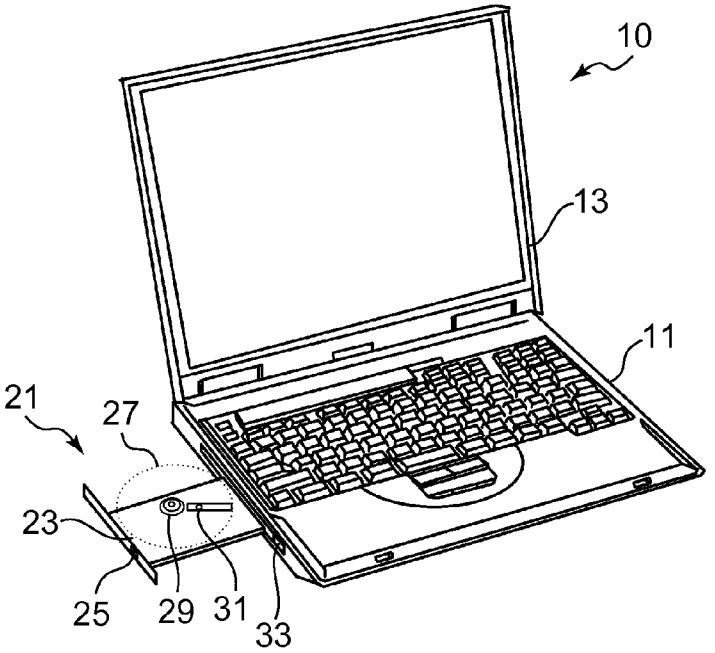
10
13
11
21
27
23
25
29
31
33

Fig. 1

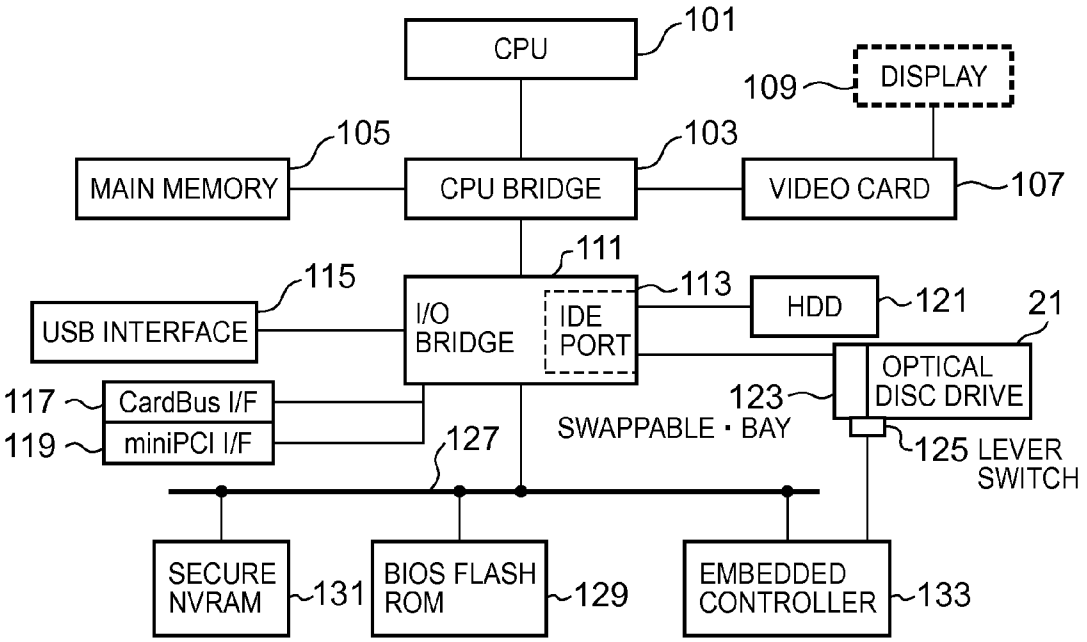
CPU
101
DISPLAY
109
105
103
MAIN MEMORY
CPU BRIDGE
VIDEO CARD
107
111
115
113
USB INTERFACE
I/O BRIDGE
IDE PORT
HDD
121
21
OPTICAL DISC DRIVE
117
CardBus I/F
123
119
miniPCI I/F
SWAPPABLE · BAY
127
125 LEVER SWITCH
SECURE NVRAM
131
BIOS FLASH ROM
129
EMBEDDED CONTROLLER
133

Fig. 2

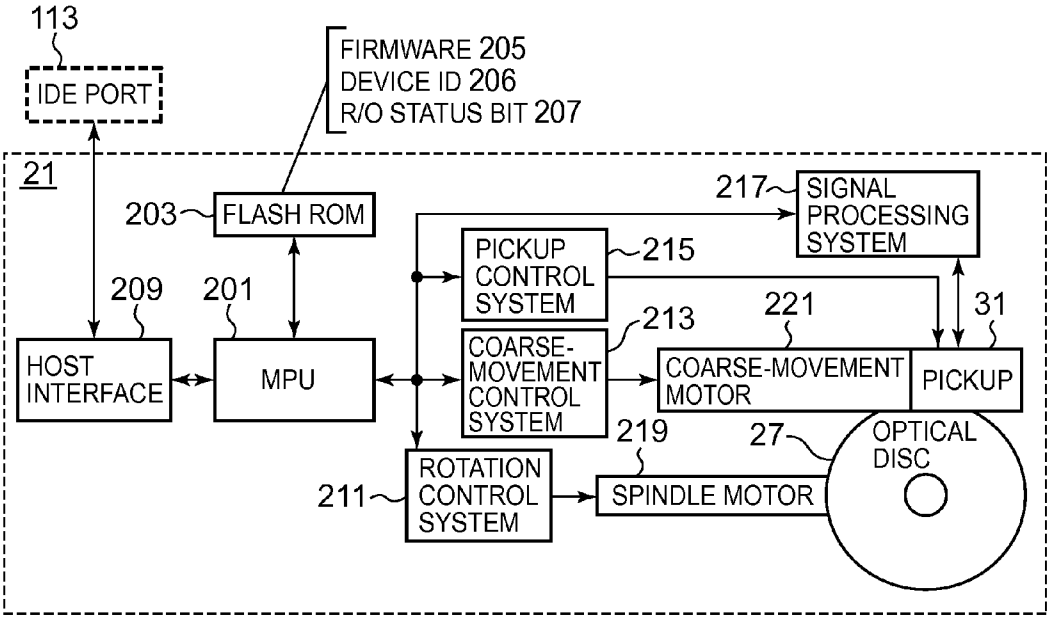

Fig. 3

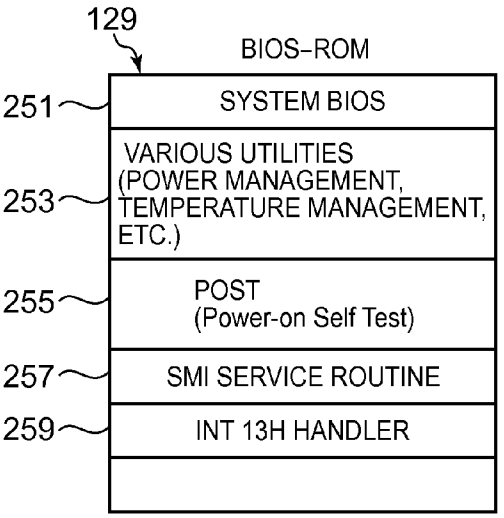

Fig. 4A

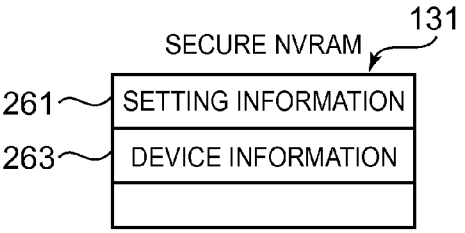

Fig. 4B

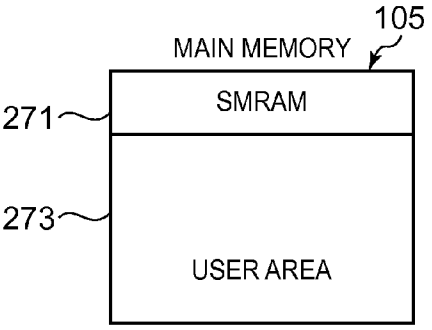

Fig. 4C

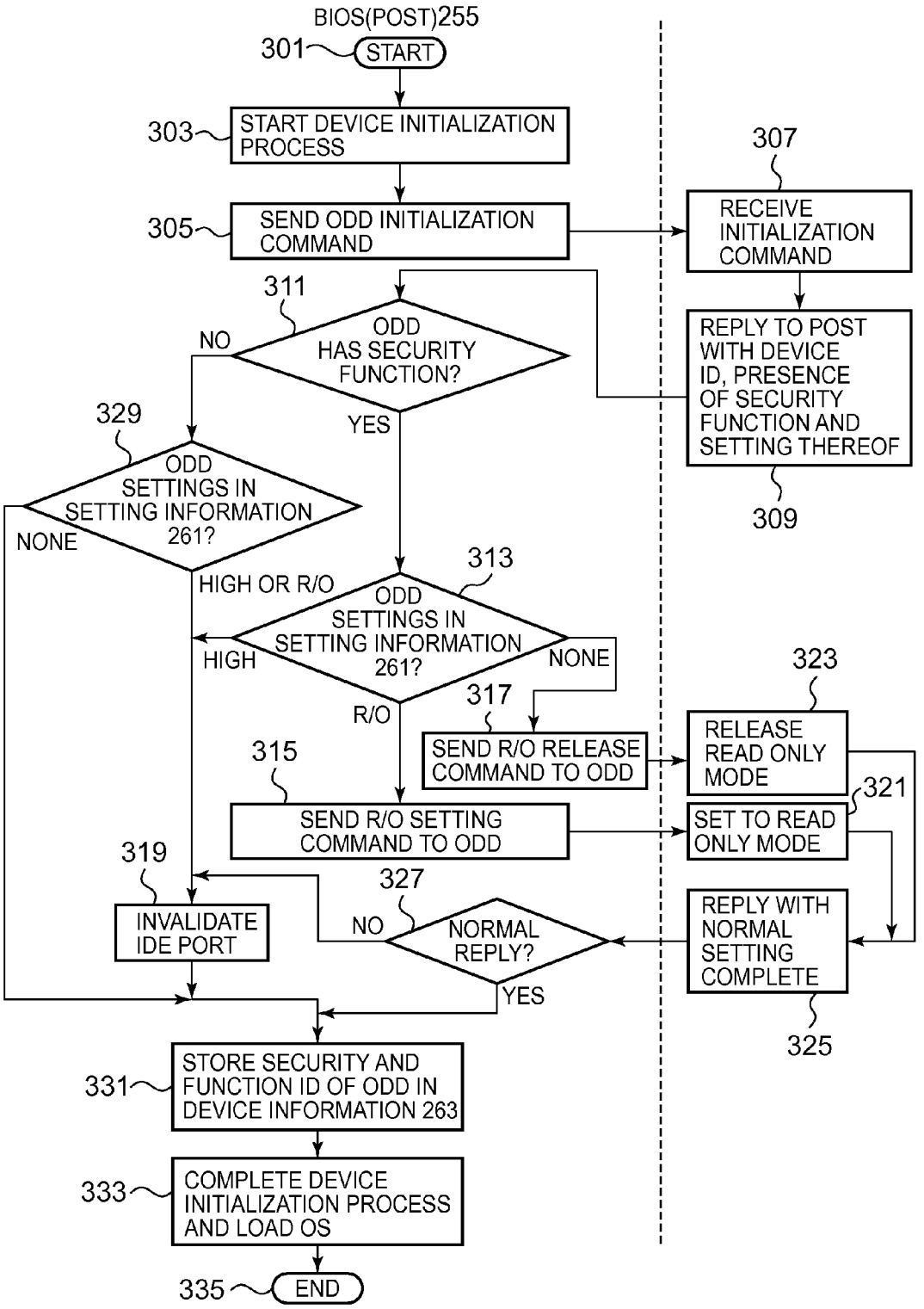
BIOS(POST)255
301
START
303
START DEVICE INITIALIZATION PROCESS
305
SEND ODD INITIALIZATION COMMAND
307
RECEIVE INITIALIZATION COMMAND
309
REPLY TO POST WITH DEVICE ID, PRESENCE OF SECURITY FUNCTION AND SETTING THEREOF
311
ODD HAS SECURITY FUNCTION?
NO
YES
329
ODD SETTINGS IN SETTING INFORMATION 261?
NONE
HIGH OR R/O
313
ODD SETTINGS IN SETTING INFORMATION 261?
HIGH
NONE
R/O
317
SEND R/O RELEASE COMMAND TO ODD
323
RELEASE READ ONLY MODE
315
SEND R/O SETTING COMMAND TO ODD
321
SET TO READ ONLY MODE
319
INVALIDATE IDE PORT
327
NORMAL REPLY?
NO
YES
REPLY WITH NORMAL SETTING COMPLETE
325
331
STORE SECURITY AND FUNCTION ID OF ODD IN DEVICE INFORMATION 263
333
COMPLETE DEVICE INITIALIZATION PROCESS AND LOAD OS
335
END

Fig. 5

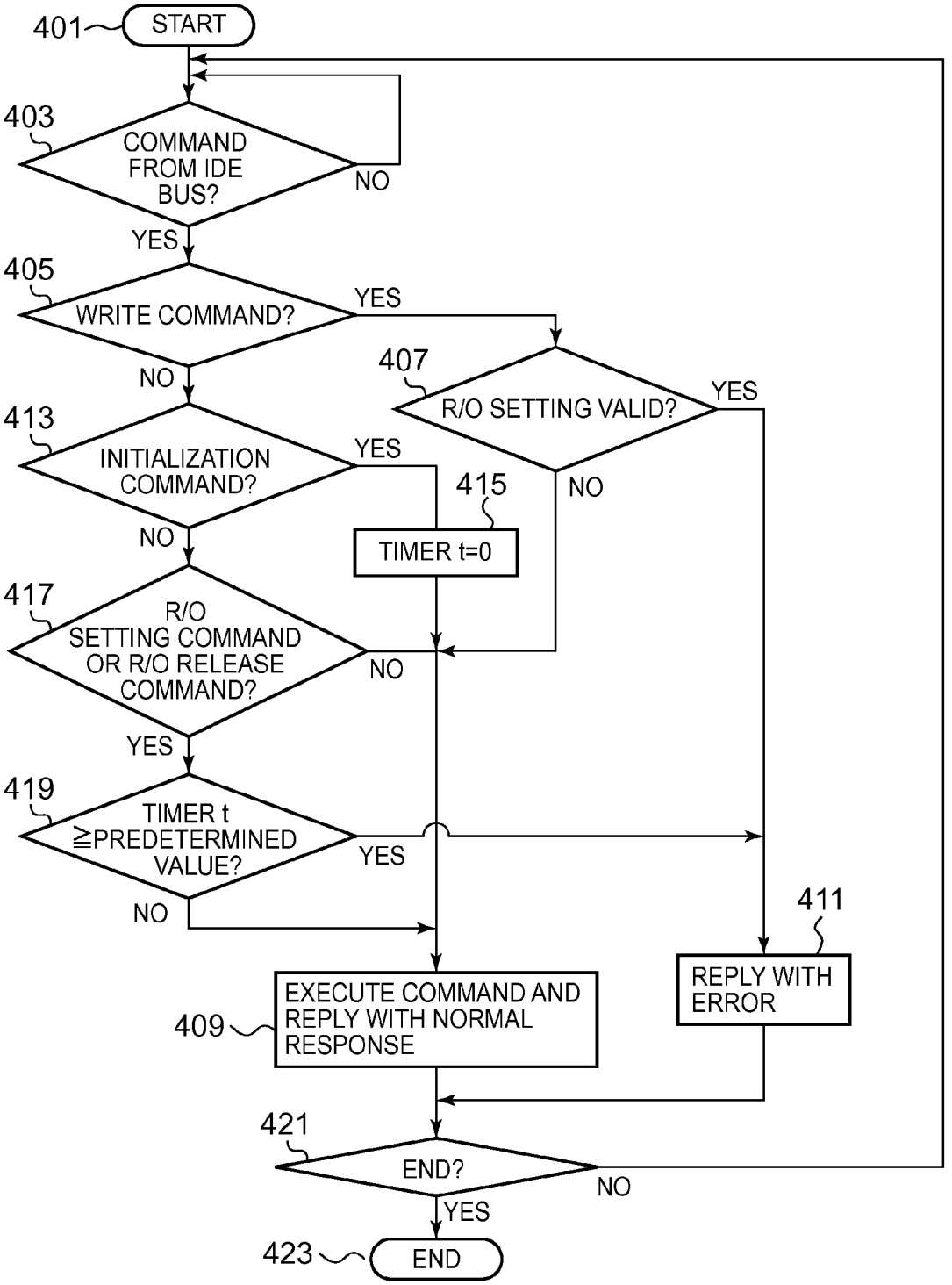
401
START
403
COMMAND FROM IDE BUS?
NO
YES
405
WRITE COMMAND?
YES
NO
407
R/O SETTING VALID?
YES
NO
413
INITIALIZATION COMMAND?
YES
NO
415
TIMER t=0
417
R/O SETTING COMMAND OR R/O RELEASE COMMAND?
NO
YES
419
TIMER t ≧PREDETERMINED VALUE?
YES
NO
411
REPLY WITH ERROR
409
EXECUTE COMMAND AND REPLY WITH NORMAL RESPONSE
421
END?
NO
YES
423
END

Fig. 6

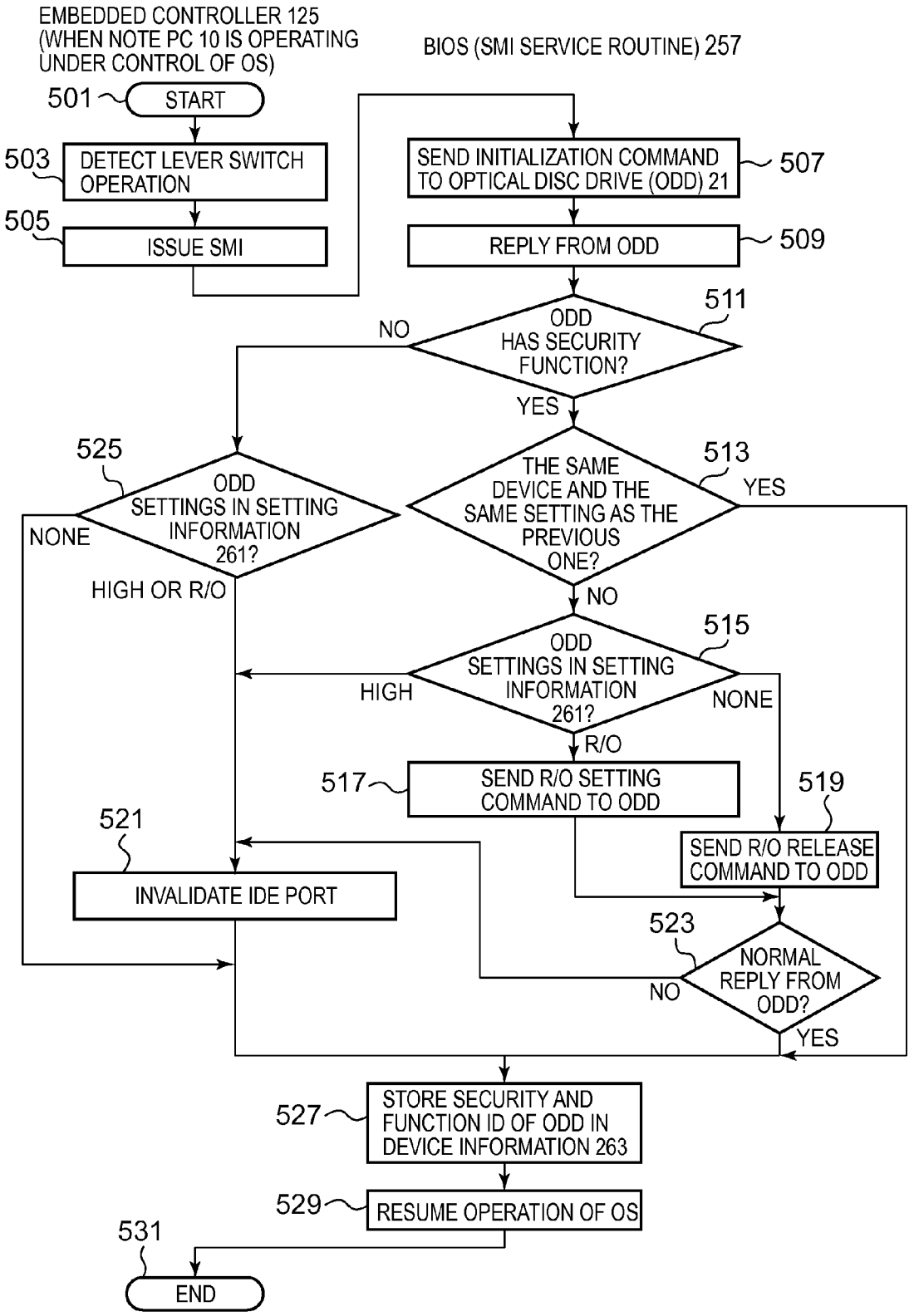
EMBEDDED CONTROLLER 125 (WHEN NOTE PC 10 IS OPERATING UNDER CONTROL OF OS)
BIOS (SMI SERVICE ROUTINE) 257
501
START
503
DETECT LEVER SWITCH OPERATION
505
ISSUE SMI
SEND INITIALIZATION COMMAND TO OPTICAL DISC DRIVE (ODD) 21
507
REPLY FROM ODD
509
511
ODD HAS SECURITY FUNCTION?
NO
YES
525
ODD SETTINGS IN SETTING INFORMATION 261?
NONE
HIGH OR R/O
513
THE SAME DEVICE AND THE SAME SETTING AS THE PREVIOUS ONE?
YES
NO
515
ODD SETTINGS IN SETTING INFORMATION 261?
HIGH
NONE
R/O
517
SEND R/O SETTING COMMAND TO ODD
519
SEND R/O RELEASE COMMAND TO ODD
521
INVALIDATE IDE PORT
523
NORMAL REPLY FROM ODD?
NO
YES
527
STORE SECURITY AND FUNCTION ID OF ODD IN DEVICE INFORMATION 263
529
RESUME OPERATION OF OS
531
END

Fig. 7

APPARATUS AND METHODS FOR SETTING SECURITY TO STORAGE UNIT AND COMPUTER

CLAIM FOR PRIORITY

This application claims priority from Japanese Patent Application No. 2007-117618, filed Apr. 26, 2007, and which is hereby incorporated by reference as if fully set forth herein.

FIELD OF THE INVENTION

The present invention generally relates to a technology for setting security to a storage unit, and more particularly, relates to a technology for inhibiting writing of data from a computer to a writable storage unit or units.

BACKGROUND OF THE INVENTION

An optical disc is a generic nomenclature of disc-shaped storage media in which data are read/written using laser light. Among optical discs, presently, although CDs, DVDs, or the like are generally used, next-generation discs such as Blue-ray Discs (hereinafter referred to as "BD" for the simplicity sake) or HD-DVDs have begun to appear on the market. These optical discs are used as not only a data medium for storing data of computers but also as a medium allowing recording and reproduction of music videos in exclusive devices. An optical disc drive is a storage unit that rotates an optical disc to read/write data from/to the optical disc. In personal computers (hereinafter, simply referred to as "PC"), regardless of their type such as a desktop or a notebook, optical disc drives are mounted on most of the products.

Optical discs are similar in their external appearance but are manufactured according to various different standards and thus often cause user confusion when using them. With regard to data medium alone, CDs, DVDs, BDs and HD-DVDs can be classified into various categories: read-only ones; once-writable ones; plural-times-rewritable ones; and so forth. To meet these many standards, there exist many types of optical disc drives. As typical types of optical disc drive, there are a CD-ROM drive in which data can only be read from CDs, a DVD-ROM drive in which data can be read from CDs and DVDs, a combo drive in which data can be read from CDs and DVDs but cannot be written to DVDs, and a super-multi drive in which data can be read/written from/to CDs and DVDs. Particularly, optical disc drives such as the combo drive and the super-multi drive, in which data writing is possible, are becoming popular in recent years. Included next-generation standards such as BD or HD-DVD in the above-mentioned ones, the number of types of the optical disc drives will much more increase.

Now, known technologies for allowing read-only access from a computer to a storage unit in which data can be read/written will be described. According to a technology taught in Japanese Laid-open (Kokai) Patent Publication No. 2006-309296, a BIOS confirms settings on permission/non-permission to use a storage unit, which is set by a supervisor, during startup of a computer, and based on the permission settings confirmed, initialization of the storage unit is inhibited, thereby restricting the use thereof. Also taught is a technology for restricting writing of data to the storage unit by using a filter driver during a control by an operating system (hereinafter, simply referred to as "OS"). According to a technology taught in Japanese Laid-open (Kokai) Patent Publication No. 2004-047041, a write protection unit is provided between a computer and a magnetic disc drive to set the magnetic disc drive to a write inhibit mode. According to a technology taught in Japanese Laid-open (Kokai) Patent Publication No. 2002-251324, a disc drive switches its mode by a switch operation between a writable mode and a non-writable mode. According to a technology taught in Japanese Laid-open (Kokai) Patent Publication No. 2007-012123, by forcibly erasing a portion of flash memory areas by a process of firmware, a write function of an optical disc drive is invalidated so that the optical disc drive is used only for reading.

As described above, with the popularization of optical disc drives in which data can be read/written (such feature hereinafter referred to as "rewritable"), manufacturers of the optical disc drives are stopping manufacturing of read-only optical disc drives, in which only date reading is possible, in order to cut down the number of components or products and to thus get the cost down. For this reason, only the rewritable optical disc drives are put into the market and thus it has become difficult to buy a read-only optical disc drive.

Further, to meet the various optical disc standards described above, there are many types of optical disc drives. Whenever a new optical disc standard is developed, the types of the optical disc drives will increase much more. Therefore, the PC makers need to decrease the number of types of components stored for manufacture and maintenance as much as possible to make component management easy or get the cost down. For this reason, many PC makers are not holding such read-only optical disc drives as components.

However, it cannot be said that such read-only optical disc drives have become completely unnecessary. For example, corporate or public authority users are reinforcing their security management to prevent illegal leaks of massive personal or confidential information handled in their businesses. As an example of the route of the information leaks, a user may remove a recording medium, in which data are written using a rewritable storage unit, from a PC and take the medium to the outside. To prevent this, the corporate or public authority users may sometimes need to order special PCs for business use in which storage units, such as an optical disc drive, in which a recording medium is removable from the PCs solely or along with a storage unit, are configured for read-only use. The PC makers therefore need to make PCs having a read-only storage unit mounted therein in order to meet such needs.

To cope with such problems, a method can be considered in which a rewritable optical disc drive is incorporated in a PC and configured for read-only use before shipping the PC. According to the technology of Japanese Laid-open (Kokai) Patent Publication No. 2006-309296, under the control of OS, a device driver restricts sending a write command from a PC to a rewritable optical disc drive which cannot be set for a read-only mode, whereby the optical disc drive is substantially treated as being configured for read-only use. However, among application software operated by an OS such as WINDOWS (registered trademark), some software can perform direct data access to an optical disc drive without a device driver that the OS provides to the application software. In such a case, even when the technology of Japanese Laid-open (Kokai) Patent Publication No. 2006-309296 is employed, there is a risk that a write command is directly sent from the application software to the optical disc drive without intervention of the device driver.

In addition, by using FLOPPY (registered trademark) discs, CD-ROMs, externally attached hard disk drives (hereinafter, simply referred to as "HDD"), and the like, a user can install and load another OS different from the OS normally installed in a built-in HDD of a PC. However, when the technology of Japanese Laid-open (Kokai) Patent Publication No. 2006-309296 is employed, a user can start up a device

driver included in another OS, different from the device driver configured to prevent sending of a write command; therefore, the sending of a write command is not restricted.

Meanwhile, an optical disc drive according to the technology of Japanese Laid-open (Kokai) Patent Publication No. 2007-012123 forcibly interrupts a write function of an originally rewritable optical disc drive and sets the optical disc drive to operate in a read-only mode. When such an optical disc drive is mounted in a PC, usually, an OS sends a command to the optical disc drive to set it to a read-only mode and the optical disc drive executes the command to operate in the read-only mode. However, even in such a case, there is a possibility that a command for canceling or changing the read-only mode can be sent from application software capable of direct data access to the optical disc drive without intervention of a device driver. Also, a case can be assumed such that another unexpected OS is installed and put into operation to prevent a command for setting a read-only mode in an optical disc drive from being sent to the optical disc drive or to send a command for canceling or changing the read-only mode to the optical disc drive, whereby a successful read-only mode operation is not ensured.

In addition, when a user removes an optical disc drive that can be set to a read-only mode from a PC in which the optical disc drive was originally mounted and attaches to the PC a rewritable optical disc drive that cannot be set for the read-only mode, the optical disc drive will not execute the command from an OS for setting the optical disc drive for the read-only mode, whereby a successful read-only mode operation is not ensured. Particularly, most of today's PCs have a swappable bay that allows attachment, removal, or replacement of peripheral devices such as an optical disc drive in a state where a PC is powered on and an OS is operating. When an optical disc drive is removably connected to a PC by the swappable bay, since it is easy to replace the optical disc drive, there is a high risk that a rewritable optical disc drive that cannot be set to a read-only mode is attached to the PC in a state where the optical disc drive can operate.

As discussed above, according to the method known in the art, it is practically impossible to ensure security even when one tries to operate a rewritable optical disc drive in a read-only mode. From the perspective of preventing information leaks, a method can be considered in which attachment of another optical disc drive to a PC is inhibited or an interface used to connect an optical disc drive to a PC is disabled. However, such a method would inhibit installation of verified application software used in business or even inspection of data and as a result, would harm the convenience of users. The same problem can occur, without limiting to the optical disc drives, in most rewritable storage units such as a hard disc drive or a semiconductor storage unit, which can be removably attached to or incorporated in PCs.

A need has arisen, therefore, to provide a method for securely permitting a computer to set security to a storage unit from/to which data can be read/written. There is also a need to provide a computer capable of performing such a security setting. There is further a need to provide a computer program (BIOS) product that permits a computer to perform such setting.

SUMMARY OF THE INVENTION

In summary, one aspect of the present invention provides a method comprising: setting a security for a data storage unit, said setting further comprising: confirming the presence of a security function of the data storage unit by a BIOS of an apparatus in a state where a control by an operating system of the apparatus is not being performed; when it is determined that the storage unit has the security function, setting the security on the data storage unit by the BIOS; and transferring the control from the BIOS to the operating system wherein the security setting is maintained.

Another aspect of the present invention provides a method comprising: directing an apparatus to securely set a data storage unit to a read-only mode, said directing further comprising: permitting execution of an operating system; detecting that the data storage device is connected to the apparatus during the execution of the operating system; transferring a control of the apparatus from the operating system to a BIOS in response to said detecting; setting the data storage device to the read-only mode by the BIOS; and transferring the control from the BIOS to the operating system wherein the state of being set to the read-only mode is maintained.

Another aspect of the present invention provides an apparatus comprising: a recording medium that stores an operating system; a nonvolatile memory that stores a BIOS; a processor capable of switching between and execution of the operating system and the BIOS; a connecting portion which establishes a removable connection between a storage unit and the apparatus; and a storage section capable of storing setting information for the storage unit; wherein, when it is determined that the storage unit is connected to the connecting portion and has a security function, the processor executes the BIOS and sets the storage unit to a read-only mode.

Another aspect of the present invention provides a tangible program storage device readable by machine, tangibly embodying a program of instructions executable by the machine to perform method steps, said method steps comprising: directing a BIOS to control a process of setting a security for a storage unit, wherein said storage unit can be set to a read-only mode and reversibly connected to an apparatus, said process of setting a security further comprising: confirming if it is possible to set the storage unit to the read-only mode; referring to setting information stored on the apparatus; and when it is determined that the storage unit can be set to the read-only mode, setting the storage unit to the read-only mode based on the setting information.

For a better understanding of the present invention, together with other and further features and advantages thereof, reference is made to the following description, taken in conjunction with the accompanying drawings, and the scope of the invention that will be pointed out in the appended claims.

BRIEF DESCRIPTION OF THE DRAWINGS

FIG. **1** is a perspective diagram showing the external view of a notebook PC according to an embodiment of the present invention;

FIG. **2** is a block diagram showing an outlined hardware configuration of the notebook PC according to an embodiment of the present invention;

FIG. **3** is a block diagram showing an outlined internal configuration of an optical disc drive according to an embodiment of the present invention;

FIGS. **4**A to **4**C are diagrams showing internal configurations of a BIOS flash ROM, a secure NVRAM and a main memory, respectively, according to an embodiment of the present invention;

FIG. **5** is a flow chart illustrating processes performed when an optical disc drive is attached to a notebook PC and the notebook PC is powered on;

FIG. **6** is a flow chart illustrating processes performed when the optical disc drive has received a command from an IDE port; and

FIG. **7** is a flow chart illustrating processes performed when an optical disc drive is connected in a hot swappable manner to a swappable bay of a notebook PC in which an OS is loaded.

DETAILED DESCRIPTION OF THE PREFERRED EMBODIMENTS

The disclosure will now provide a general overview of the invention followed by a more detailed description of the invention and preferred embodiments with reference to the figures. It is to be understood that the present invention, in accordance with at least one presently preferred embodiment, as generally described and illustrated in the Figures herein, may be arranged and designed in a wide variety of different configurations. Thus, the following more detailed description of the embodiments of the methods of the present invention, as represented in the Figures, is not intended to limit the scope of the invention, as claimed, but is merely representative of selected embodiments of the invention. Although illustrative embodiments of the present invention have been described herein with reference to the accompanying Figures, it is to be understood that the invention is not limited to those precise embodiments, and that various other changes and modifications may be affected by one skilled in the art without departing from the scope or spirit of the invention.

According to one embodiment of the present invention, there is provided a method for permitting a computer to set security to a storage unit from/to which data can be read/written. In the setting method, a computer executes a BIOS to confirm presence of a security function of a storage unit. The security function means a function that urges a storage unit to operate in accordance with a security setting process of the present invention. For example, the security function may be configured such that when a storage unit receives a specific command from a computer, the function may force the storage unit per se either to operate in a read-only mode or to cancel or change the read-only mode. When the storage unit possesses the security function, the BIOS carries out setting of security to the storage unit. And, the setting by the BIOS is maintained so that the security with regard to the storage unit is ensured even when a control is transferred to the OS.

According to an embodiment of the present invention, since the security setting of the storage unit is performed only by the BIOS, the security setting once preset cannot be cancelled or changed by an application software directly accessing the storage unit or by starting another OS. Since replacement of the BIOS can be enabled only by computer makers or a supervisor knowing a supervisor password, or when replaced integral with a nonvolatile memory, the operation of a computer can be disabled, it would be difficult for general users to cancel or change the security setting of the storage unit. When the setting of security is performed during execution of a POST (Power-On Self Test) after startup of a computer, it is possible to ensure the security of the storage unit whenever starting of the computer is carried out.

When the storage unit receives a specific command regarding setting of security but does not execute the command at any time after the end of a predetermined period after an initialization command has been received during execution of a POST, it is possible to mitigate or reduce a risk that the specific command is intercepted and altered and the security is canceled or changed. When the BIOS acquires unique information of the storage unit and encodes the specific command regarding the security using the unique information, it is possible to reduce the possibility that the specific command is intercepted and altered in the course of being sent from a computer to the storage unit or that someone removes the storage unit from the PC by disassembling and takes the storage unit to the outside.

The computer may be provided with setting information including a setting wherein access to the storage unit is completely restricted; a setting wherein access to the storage unit is not restricted at all; and a setting wherein access to the storage unit is set to a read-only mode. Then, the BIOS can flexibly select the setting method of security on the storage unit by using the setting information. For instance, when the storage unit has the security function, the BIOS can invalidate the input/output port of the computer in association with the storage unit or set the storage unit to a read-only mode or a mode wherein access to the storage unit from the computer is not restricted. On the other hand, when the storage unit does not have the security function, the BIOS can invalidate the input/output port of the computer in association with the storage unit or set the storage unit to a mode wherein access to the storage unit from the computer is not restricted.

In accordance with an embodiment of the present invention, there is provided a security setting method when a storage unit is connected to a computer in a state where the computer is executing an OS. When it is detected that the storage unit is connected to the computer during execution of the OS, a control is transferred from the OS to a BIOS. Then, the BIOS sets the storage unit to a read-only mode and the control is transferred from the BIOS to the OS while maintaining the state of being set to the read-only mode, whereby it is possible to securely perform the security setting by the BIOS.

In accordance with an embodiment of the present invention, there is provided a computer to which a readable and writable storage unit, from/to which data can be read/written and which has a security function, can be attached. The computer includes a recording medium that stores therein an operating system (an OS); a nonvolatile memory that stores therein a BIOS; a processor capable of switching and executing the OS and the BIOS; a connecting portion that performs a removable connection of the storage unit; and a storage section capable of storing setting information on security in the storage unit. When it is determined that the storage unit connected to the connecting portion possesses a security function, the processor executes the BIOS and sets the storage unit to the read-only mode. The storage unit may be an optical disc drive, a hard disc drive or a semiconductor storage unit. The connection portion may connect the storage unit to the computer via an interface standardized by any one of IDE, USB, PCMCIA, CardBus, miniPCI, and Express Card.

The present invention is particularly suitable when the driving portion of the storage unit is connected to the computer via a connector or an optical communication and is physically removed or detached from the computer along with the recording medium or when the storage unit itself is fixed to the computer and only the recording medium is removed from the storage unit. When it is detected that the storage unit is connected to the connecting portion in a state where the OS is being in operation, the processor may acquire an SMI and a control is transferred from the OS to the BIOS, whereby the storage unit is set to the read-only mode. With this configuration, a storage unit which is connected in a hot swappable manner during operation of the OS can be set to a read-only mode and operated in that mode. In accordance with a fourth aspect of the present invention, there is provided

a BIOS for permitting a computer to implement the above-described security setting function.

In accordance with the above-mentioned diverse aspects of the present invention, it is possible to provide a method for permitting a computer to set security to a readable and writable storage unit from/to which data can be read/written. Further, it is possible to provide a computer capable of performing such security setting. Furthermore, it is possible to provide a computer program (BIOS) product that permits a computer to perform such setting.

Referring now to the figures, FIG. **1** is a perspective view illustrating the external view and configuration of a notebook PC (hereinafter, simply referred to as "notebook PC") **10** according to an embodiment of the present invention. The notebook PC **10** includes a case **11** in which a keyboard and a pointing device are mounted on the surface and many devices are accommodated therein and a cover portion **13** in which a liquid crystal display (LCD) is mounted on the surface. An optical disc drive **21** is mounted on the lateral surface of the case **11**. The optical disc drive **21** has a tray **23** that can be opened, and an eject button **25** is provided to the tray **23** so as to be exposed to the lateral surface of the case **11**. When a user presses the eject button **25**, the tray **23** is pushed forward from the lateral surface of the case **11**. In the optical disc drive **21**, in order to save space, a spindle **29** and a pickup **31** are attached to the tray **23** side. When a user inserts and sets an optical disc **27** on the tray **23** so that the center of the disc is fitted to the spindle **29** and pushes the tray **23** pushed forward from the lateral surface of the case **11** back to the inside of the case **11**, the spindle **29** starts rotating and the pickup **31** reciprocates in a direction from the center to the periphery of the optical disc **27** and vice versa. Accordingly, the optical disc drive **21** can read/write data from/to the optical disc **27**.

The optical disc drive **21** is attached to the notebook PC **10** via a swappable bay. The swappable bay corresponds to a hot swap that performs attachment, removal and replacement of devices in a state where an OS is operating in the notebook PC **10** and to a warm swap that performs attachment, removal and replacement of devices in a state where the operation of the notebook PC **10** is suspended. By moving a removal lever **33** of the swappable bay, the optical disc drive **21** can be removed from the notebook PC **10**. The removal lever **33** is a lever for physically separating the optical disc drive **21** from an interface and includes a switch (not shown) for detecting an operation for attachment or removal of the optical disc drive **21** and causing software to perform a process corresponding to the operation.

FIG. **2** is a block diagram showing a schematic hardware configuration of the notebook PC **10**. A CPU **101** is an arithmetic-processing unit for performing a main function of the notebook PC **10** and executes an OS, a BIOS, a device driver, or an application program. The CPU **101** can be operated in an SMM (System Management Mode) which is a privileged execution mode for system management when an SMI (System Management Interrupt) input pin (SMI#) is asserted. The CPU **101** operating in SMM can execute operations mainly relating to security, suspend, resume and power management under the control of the BIOS.

A CPU bridge **103** is configured to perform functions including a memory controller function for controlling access to a main memory **105** and a data buffer function for absorbing difference in data transmission speed between connected devices. The main memory **105** is a writable memory used as a read area from which programs executed by the CPU **101** are read and a work area to which processing data are written. The main memory **105** also includes an area as an SMRAM (System Management RAM), which will be described later. A video card **107** has a video chip (not shown) and a VRAM (not shown). The video card **107** receives rendering commands from the CPU **101**, generates images to be rendered, and writes the images to the VRAM. The images read from the VRAM are sent to a display **109** as rendering data.

An I/O bridge **111** similar to the CPU bridge **103** is provided as a device controller which constitutes a chip set. The I/O bridge **111** incorporates therein an IDE port **113** having an IDE (Integrated Device Electronics) interface function. The I/O bridge **111** can be connected to various peripheral devices in compliance with the USB standards via a USB interface **115**. The various peripheral devices as used herein include storage units such as an optical disc drive, a hard disc drive or a semiconductor storage unit, which are externally attached. Also, storage units in compliance with respective standards can be connected via a CardBus interface **117** and a miniPCI interface **119**.

To the IDE port **113**, an HDD **121** in compliance with ATA (Advanced Technology Attachment) or serial ATA and an optical disc drive **21** which is compliant with ATAPI (ATA Packet Interface) are connected. The HDD **121** has installed therein an OS, a device driver, an application program, and the like. The optical disc drive **21** is connected to the IDE port **113** via a swappable bay **123**. The swappable bay **123** includes a lever switch **125** that opens/closes when a user moves the removal lever **33** to attach/remove a device to/from the bay, details of which will be described later.

The I/O bridge **111** is connected to a device that does not require high-speed data transmission via an LPC bus **127**. The LPC bus **127** is connected to a BIOS flash ROM **129**, a secure NVRAM (Non-Volatile RAM) **131**, and an embedded controller **133**. The BIOS flash ROM **129** and the secure NVRAM **131** will be described later.

The embedded controller **133** is a micro computer configured by 8 through 16 bits CPU, a ROM and a RAM, and includes A/D input terminals and D/A output terminals for a plurality of channels, a timer, and digital input/output terminals. A cooling fan (not shown), a temperature sensor (not shown) and a power controller for controlling a power supply unit are connected to the embedded controller **133** via the input/output terminals. A program for managing the operating environment inside the PC can be executed independently of the CPU **101**. The lever switch **125** of the swappable bay **123** is also connected to the embedded controller **133**. The embedded controller **133** detects the opening/closing of the lever switch **125** to thereby detect the attachment/removal of devices to/from the swappable bay **123**. The embedded controller **133** can also make an assertion of the SMI# of the CPU **101** to thereby operate the CPU **101** in the SMM and can execute management of the supply of power to the device connected the swappable bay **123**.

It is to be understood that FIG. **2** only illustrates the primary hardware configuration related to an embodiment and the connections in order to describe the embodiment. In addition to the components described above, many other devices such as a wired LAN adapter, a wireless LAN adapter, a power supply unit, an I/O controller, or an input/output device such as a keyboard or a mouse are employed for the constitution of the notebook PC **10**. However, since these are well known to one having ordinary skill in the art, detailed explanations for them will not be provided here. Of course, a plurality of blocks shown in FIG. **2** may form a single integrated circuit or device, or one block may be divided into a plurality of integrated circuits or devices, and these configurations are also included within the scope of the present invention, so long as one having ordinary skill in the art can arbitrarily select the configurations.

FIG. **3** is a block diagram illustrating a schematic internal configuration of the optical disc drive **21**. Within the optical disc drive **21**, an MPU (Micro Processing Unit) **201** executes firmware **205** stored in a flash ROM **203** and thereby controls the entire functions of the optical disc drive **21**. More specifically, the MPU **201** controls the respective functions of the optical disc drive **21** as a rotation control system **211**, a coarse-movement control system **213**, a pickup control system **215**, and a signal processing system **217**. The rotation control system **211** is provided for controlling a host interface **209** communicating with the IDE port **113** and controlling rotation of the spindle motor **219**. The coarse-movement control system **213** is provided for operating a coarse-movement motor **221** to move the pickup **31** to a position close to a target track on the optical disc **27**. The pickup control system **215** is provided for controlling an actuator (not shown) on the pickup **31** to irradiate laser light onto the target track on the optical disc **27**. The signal processing system **217** is provided for processing signals read by the pickup **31** from the optical disc **27** to reproduce data and for generating signals to be written to the optical disc **27** based on data sent from the host interface **209**.

The flash ROM **203** has recorded therein a device ID **206** unique to the optical disc drive **21** and an R/O status bit **207** representing whether or not read-only (R/O) setting of the optical disc drive **21** is valid. When the R/O status bit **207** states that the R/O setting of the optical disc drive **21**, which is normally a rewritable one, is valid, the firmware **205** operates the optical disc drive **21** as being a read-only one. When the host interface **209** receives a read-only setting command from the IDE port **113**, the optical disc drive **21** overwrites the R/O status bit **207**, whereby the operation of the firmware **205** can be set to a read-only mode. On the other hand, when the host interface **209** receives a read-only release command from the IDE port **113**, the optical disc drive **21** overwrites the R/O status bit **207**, whereby the operation of the firmware **205** can be set to a rewritable mode. Such function of setting to the read-only mode or the rewritable mode is referred to as a security function of the optical disc drive **21**. The firmware **205** includes a timer function. By the timer function of the firmware **205**, the read-only setting command and the read-only release command can only be received during a predetermined time after the optical disc drive is powered on and an initialization command is received. The state of the R/O status bit **207** is maintained even after the optical disc drive **21** is powered off. Detailed description of this will be later provided.

FIGS. **4**A to **4**C are schematic diagrams illustrating the internal configurations of the BIOS flash ROM **129**, the secure NVRAM **131**, and the main memory **105**. The BIOS flash ROM **129** shown in FIG. **4**A is a nonvolatile memory, for which the stored contents are electrically rewritable. The BIOS flash ROM **129** stores therein a system BIOS **251**, which is a basic program used for loading and management of a system; various utilities **253**, which are software programs for managing the operating environment such as power and temperature; a POST (Power-On Self Test) **255**, which is loaded when the notebook PC **10** is powered on, and conducts an initial setting and test of hardware; an SMI service routine **257**, which is loaded when the CPU **101** operates in the SMM; and an INT **13**H hander **259**, which accesses the HDD **121**. These program modules stored in the BIOS flash ROM **129** constitute the BIOS. In this embodiment, the POST **255** is configured to perform an operation of setting the optical disc drive **21** to the read-only mode. The program module that sets the read-only mode may be configured separate from the POST **255**. When the CPU **101** enters the SMM from the state where it is controlled by the OS, the operation of setting the optical disc drive **21** to the read-only mode is performed by the SMI service routine **257**. Detailed description of the above will be later provided.

The secure NVRAM **131** shown in FIG. **4**B is a battery backup RAM which is provided for preventing data loss when the notebook PC **10** is powered off, and in which stored contents can be set read/write inhibited by the operation of the system BIOS **251**. The secure NVRAM **131** stores therein setting information **261** for the device controllers (the CPU bridge **103** and the I/O bridge **111**) of the PC and device information **263**, which is information on the devices connected to the device controllers. The setting information **261** mainly includes the loading sequence of the disc drives, drive numbers, a connection method of peripheral devices, parameters related to data transfer, and a POP (Power-On Password). The device information **263** includes a device ID **206** unique to the respective devices connected to the device controllers and internal setting information of the respective devices. The device ID **206** of the optical disc drive **21** connected to the swappable bay **123** and the internal setting information thereof are also included in the device information **263**.

The setting information **261** for the optical disc drive **21** connected to the IDE port **113** may have three settings (1) through (3) as follows.

(1) "HIGH"

In this setting, regardless of whether or not the optical disc drive **21** possesses therein a security function, the IDE port **113** to the optical disc drive **21** is invalidated. Thus, the notebook PC **10** cannot detect the presence of the optical disc drive and access to the optical disc drive is completely restricted.

(2) "R/O"

In this setting, when the optical disc drive **21** possessing therein a security function is connected to the IDE port **113**, the optical disc drive **21** is set to a read-only mode. When an optical disc drive possessing no security function is connected, the IDE port **113** is invalidated in the same manner as the "HIGH" setting.

(3) "NONE"

In this setting, access from the notebook PC **10** to the optical disc drive **21** connected to the IDE port **113** is not restricted but data are freely accessible. When the optical disc drive **21** set to the read-only mode is mounted, the drive is set to a rewritable mode.

The notebook PC **10** may have one of the three settings (1) through (3) which are set at an assembling stage in a factory based on the user's purpose; however, in this embodiment, a description will be provided by assuming that the notebook PC is provided with the "R/O setting" (2). The setting contents are stored in the secure NVRAM so that the contents can only be accessed by the BIOS.

The main memory **105** shown in FIG. **4**C includes a user area **273** used during a normal operation of the notebook PC **10** and an area for an SMRAM (System Management RAM) **271**. When the SMI# of the CPU **101** is asserted by hardware, the CPU **101** begins to operate in the SMM and the SMI service routine **257** is called and executed under the control of the system BIOS **251**. Since the CPU **101** in the SMM operates in a single tasking, all interrupts are regarded as invalid. Further, since the CPU **101** operating in the SMM can exclusively use the SMRAM **271**, the control is not taken over to a task other than the SMI service routine **257**. During a period in which the CPU **101** is operating in the SMM, the operation states of the OS immediately before the CPU enters the SMM, the operation states of software operating thereon, and user

data are maintained in the user area **273**. Also, information representing the register states immediately before the CPU enters the SMM is stored in the SMRAM **271**. When the CPU **101** stops operating in the SMM, the CPU **101** is then controlled by the OS and recovers the operation states maintained in the user area **273** based on the register states stored in the SMRAM **271**.

FIG. **5** is a flow chart illustrating processes performed when the optical disc drive **21** is attached to the notebook PC and the notebook PC **10** is powered on. When the notebook PC **10** is powered on, an initial setting process for hardware is initiated by the POST **255** under the control of the system BIOS **251** (Blocks **301** and **303**). The POST **255** sends an initialization command to the optical disc drive **21** (Block **305**). By the initialization command, the POST **255** refers to the optical disc drive **21** to find the device ID **206** of the optical disc drive **21** and to confirm whether the optical disc drive has a security function that permits the optical disc drive **21** per se to operate in a read-only mode or releases it. The reference for the security function is performed by a vendor command, one of the IDE command, which individual makers can set and use. Since the optical disc drive **21** without the security function does not respond to the vendor command, the POST **255** can determine that the optical disc drive **21** does not have the security function when there is no response to the sent command. Of course, the vendor command is not usually made open.

The optical disc drive **21** having received the initialization command (Block **307**) sends a reply to the POST **255** indicating its own device ID **206** and presence of the security function (Block **309**). Then, the POST **255** first determines whether or not the optical disc drive **21** possesses the security function based on the reply from the optical disc drive **21** (Block **311**). If the optical disc drive **21** possesses the security function, the settings of the optical disc drive **21** included in the setting information **261** is identified (Block **313**). If the identified setting is "R/O," the POST **255** sends a command (hereinafter, referred to as "read-only setting command") for setting the optical disc drive to the read-only mode (Block **315**). If the identified setting is "NONE," the POST **255** sends a command (hereinafter, referred to as "read-only release command") for releasing the read-only mode of the optical disc drive **21** (Block **317**). If the identified setting is "HIGH," the POST **255** invalidates a connecting portion of the IDE port **113** to the optical disc drive **21** (Block **319**) and a process of Block **331** is performed.

The optical disc drive **21** having received the read-only setting command sets the optical disc drive per se to operate in the read-only mode (Block **321**). The optical disc drive **21** having received the read-only release command releases the setting of the read-only mode set thereto so that it can operate in a rewritable mode (Block **323**). The read-only setting command and the read-only release command are the vendor command that is not usually made open. In Blocks **315** and **317**, it is preferable to send the read-only setting command and the read-only release command by encoding the commands using the device ID **206** received by the POST **255** as a key. By doing this, it may become difficult to work out a method for releasing the read-only setting by analyzing the optical disc drive **21** or the commands sent from the notebook PC **10** to the optical disc drive **21**. The optical disc drive **21** having completed the read-only setting or release replies to the POST **255** by reporting that the command has been normally completed (Block **325**). Then, the POST **255** determines whether or not the reply from the optical disc drive **21** reports that the command has been normally completed (Block **327**). If it is a normal reply, the process of Block **331** is performed. If it is not a normal reply, the flow moves to Block **319**, where the connecting portion of the IDE port **113** to the optical disc drive **21** is invalidated, and the process of Block **331** is performed.

Even when it is determined in Block **311** that the optical disc drive **21** does not have the security function, the settings of the optical disc drive **21** included in the setting information **261** is identified (Block **329**). When the identified setting is "R/O" or "HIGH," the flow moves to Block **319**, where the POST **255** invalidates the connecting portion of the IDE port **113** to the optical disc drive **21**, and the process of Block **331** is performed. When the identified setting is "NONE," the POST **255** performs the process of Block **331**. After completion of the above-described processes, the POST **255** stores the device ID **206** of the optical disc drive **21** and information on the presence of the security function determined in Block **311** in the secure NVRAM **131** as the device information **263** (Block **331**) and locks the secure NVRAM **131** to inhibit later access. Subsequently, the INT **13**H handler **259** is called by the BIOS flash ROM **129** to start the OS (Blocks **333** and **335**). The processes related to the security setting of the optical disc drive **21** described with reference to FIG. **5** are performed at any time during processing before the OS is started after the notebook PC **10** is powered on.

FIG. **6** is a flow chart illustrating processes performed by the firmware **205** when the optical disc drive **21** has received a command from the IDE port **113**. This flow chart shows the case where the optical disc drive **21** has the security function of the present invention. When the optical disc drive **21** receives any command from the IDE port **113** (Blocks **401** and **403**), the firmware **205** first determines whether or not the command is a write command (Block **405**). If it is a write command, the firmware **205** reads the R/O status bit **207** to determine whether it is set the read-only setting (Block **407**). If it is not the read-only setting, since the optical disc drive **21** operates as a rewritable one, the write command is executed and a normal response is replied to the IDE port **113** (Block **409**). If it is the read-only setting, since the optical disc drive **21** operates as a read-only one, the write command is not executed and an error is replied to the IDE port **113** (Block **411**).

When it is determined in Block **405** that the received command is not the write command, the firmware **205** determines whether the command is the initialization command sent in Block **305** of FIG. **5** from the BIOS (Block **413**). If it is the initialization command, the internal timer function of the firmware **205** is reset and starts counting (Block **415**) and the flow moves to Block **409**, where a normal response is replied to the IDE port **113**. The normal response as used herein includes the device ID **206** and information on the presence of the security function, as shown in Blocks **309** and **311** of FIG. **5**.

When it is determined in Block **413** that the received command is not the initialization command, the firmware **205** determines whether the command is either the read-only setting command or the read-only release command (Block **417**). If it is neither the read-only setting command nor the read-only release command, the flow moves to Block **409**, where the command is executed and a normal response is replied to the IDE port **113**. If it is the read-only setting command or the read-only release command, the timer function of the firmware **205** determines whether the elapsed time after reception of the initialization command in Block **415** is within a predetermined time (Block **419**). If the predetermined time or more has elapsed after reception of the initialization command, the flow proceeds to Block **411**, where without executing the command, an error is replied to the IDE

port **113**. If the elapsed time after reception of the initialization command is within the predetermined time, the flow proceeds to Block **409**, where the read-only setting command or the read-only release command is executed, the status of the R/O statue bit **207** is overwritten, and a normal response is replied to the IDE port **113**. The above-described processes are repeated over Blocks **403** to **421** while the optical disc drive **21** continues operating but are stopped when the optical disc drive **21** is powered off (Blocks **421** and **423**).

The maximum elapsed time serving as the basis for the determination in Block **419** can be set to a time normally required for completing the processes of FIG. **5** after the notebook PC **10** is powered on. The main idea is to set the maximum elapsed time so that the read-only setting command or the read-only release command set to the optical disc drive **21** should only be received during a period in which the notebook PC **10** is executing the processes of FIG. **5** under the control of the BIOS. By doing this, in a state where the OS is loaded in the notebook PC **10** via the processes shown in FIGS. **5** and **6**, even when a command related to security is intercepted and altered via the OS, it is impossible to cancel or change the read-only setting via the optical disc and it is thus safe. There can be several other methods for restricting the releasing of the read-only setting to when the optical disc drive **21** is controlled by the BIOS. For example, once the read-only setting command is received, the optical disc drive **21** may be made unable to receive the read-only release command until the optical disc drive is powered off. Alternatively, separate from the R/O status bit **207**, a bit representing as to whether the read-only setting command or the read-only release command has been received may be provided to the flash ROM **203** and the bit may be used for the release restricting method.

If the settings of the optical disc drive **21** included in the setting information **261** is "R/O," the OS started after the optical disc drive **21** is set to the read-only mode may recognize the optical disc drive **21** as being a read-only one by the above-described processes. Therefore, no write command is sent to the optical disc drive **21** via a device controller that controls input/output of data from the OS to the optical disc drive **21**. If any application software sends a write command to the optical disc drive via the device driver of the OS, an error is replied to the command by the internal process of the optical disc drive **21** that is set to the read-only mode, as shown in Block **411**.

The operation of setting the optical disc drive **21** to the read-only mode is performed at an initial setting step by the control of the BIOS before the OS is started. Therefore, even when another OS different from the OS normally installed in the notebook PC **10** is started, the optical disc drive **21** is already set to the read-only mode by the time the OS is started. Moreover, since a properly encoded command sent by the OS after the end of the time set on the timer is not executed, it is impossible to release the read-only setting. When a consideration is made as to a case where an optical disc drive does not possess the security function wherein the drive can be set to the read-only mode and is connected to the notebook PC **10** and the notebook PC **10** is powered on, if the setting information of the secure NVRAM **131** is "R/O," the connecting portion to the IDE port is invalidated and the optical disc drive cannot be used and it is thus safe. When the setting information of the secure NVRAM **131** is "R/O," it is only possible to use the optical disc drive **21** having the security function of the present invention by setting the drive to the read-only mode.

However, the optical disc drive **21** is connected to the notebook PC **10** via the swappable bay **123**. Thus, when the notebook PC **10** is activated in a state where the optical disc drive **21** is removed from the swappable bay **123**, the OS can be started without performing the operation of setting the optical disc drive **21** to the read-only mode. When the optical disc drive **21** is connected in a hot swappable manner to the swappable bay **123** after the OS is started, it may be possible to operate the optical disc drive **21** in the rewritable state without performing the read-only setting operation, which is not desirable from the perspective of security. In addition, when an optical disc drive that does not have the security function wherein the drive can be set to the read-only mode is connected in the hot swappable manner, it may be possible to use the optical disc drive without the IDE port being invalidated. In such a case, it cannot be said that the security is sufficiently ensured.

FIG. **7** is a flow chart illustrating processes performed when the optical disc drive **21** is connected in a hot swappable manner to the swappable bay **123** of the notebook PC **10** in which the OS has been started. When the optical disc drive **21** is attached to the swappable bay **123** (Block **501**), since the removal lever **33** should be operated, the embedded controller **133** can detect opening/closing of the lever switch **125** (Block **503**). In response to the opening/closing of the lever switch **125**, the embedded controller **133** makes assertion of the SMI# of the CPU **101** to thereby operate the CPU in the SMM (Block **505**) and extends the SMI service routine **257** to the SMRAM **271** to be executed under the control by the system BIOS **251**. Since the operation of the embedded controller **133** is independent from the CPU **101**, the above processes are performed independent from the OS. Unlike the process by the POST **255** that requires initial settings for the entire hardware, the process by the SMI service routine **257** only requires processing regarding the devices connected to the swappable bay **123**.

Similar to the process by the POST **255** in Block **305** of FIG. **5**, the SMI service routine **257** sends a device initialization command to the optical disc drive **21** (Block **507**). By the device initialization command, the SMI service routine **257** refers to the optical disc drive **21** to find the device ID **206** of the optical disc drive **21** and to confirm whether or not the optical disc drive **21** possesses a security function. The optical disc drive **21** having received the initialization command replies to the SMI service routine **257** with the referred contents in a manner similar to the operations in Blocks **307** and **309**.

The SMI service routine **257** having received the reply (Block **509**) determines whether the optical disc drive **21** possesses therein the security function (Block **511**). If the optical disc drive **21** possesses the security function, the SMI service routine **257** compares the device ID **206** and the security setting of the optical disc drive **21** with information recorded as the device information **263** of the optical disc drive previously connected to the swappable bay **123** (Block **513**). If the optical disc drive **21** is the same as the optical disc drive connected at the preceding time and has the same read-only setting, there is no need to perform additional setting and thus the flow moves to Block **527**.

When it is determined in Block **513** that the optical disc drive **21** is different from the one connected at the preceding time or has a different read-only setting, the setting of the optical disc drive **21** is identified as to which one of those included in the setting information **261** (Block **515**) is it. If the identified setting is "R/O," the SMI service routine **257** sends a read-only setting command to the optical disc drive **21** (Block **517**). If the identified setting is "NONE," the SMI service routine **257** sends a read-only release command to the optical disc drive **21** (Block **519**). If the identified setting is

"HIGH," the SMI service routine **257** invalidates a connecting portion of the IDE port **113** to the optical disc drive **21** (Block **521**). Then, it is determined whether the SMI service routine **257** has received a reply from the optical disc drive **21** having received the command in Blocks **517** and **519** and completed the read-only setting or release, the reply reporting that the command has been normally completed (Block **523**). If it is a normal reply, the process of Block **527** is performed. If it is not a normal reply, the flow proceeds to Block **521**, where the connecting portion of the IDE port **113** to the optical disc drive **21** is invalidated, and the process of Block **527** is performed.

Even when it is determined in Block **511** that the optical disc drive **21** does not possess the security function, the settings of the optical disc drive **21** included in the setting information **261** is identified (Block **525**). When the identified setting is "R/O" or "HIGH," the flow proceeds to Block **521**, where the SMI service routine **257** invalidates the connecting portion of the IDE port **113** to the optical disc drive **21**, and the process of Block **527** is performed. When the identified setting is "NONE," the SMI service routine **257** performs the process of Block **527**. After finishing the above-described determination and processes, the SMI service routine **257** stores the device ID **206** of the optical disc drive **21** and information on the presence and setting of the security function in the secure NVRAM **131** as the device information **263** (Block **527**) and stops the SMM to resume the operation by the OS (Blocks **529** and **531**). The secure NVRAM **131** is locked by the POST **255** before a control is transferred to the OS and is therefore not accessible from the OS or the application software. When the operation by the OS resumes, the OS recognizes a newly connected optical disc drive **21** and a process such as reading of the corresponding device driver is performed.

Even when the optical disc drive **21** is connected in a hot swappable manner to the swappable bay **123**, the initialization command is sent in Block **507** after the drive is connected to the swappable bay **123**. As shown in FIG. **6**, the optical disc drive **21** can receive the read-only setting command or the read-only release command only during a predetermined period after the initialization command is sent. Therefore, the setting is not released by a command at any time after the end of the predetermined period. That is, even when the optical disc drive **21** is connected in a hot swappable manner to the swappable bay **123**, since the optical disc drive **21** performs the same operation as that shown in FIG. **6**, it is possible to efficiently ensure security.

When the notebook PC **10** is in a suspended (or hibernation) state, power is not supplied to the optical disc drive **21** but the contents stored in the R/O status bit **207** are maintained even after power-off. Therefore, if the R/O status bit **207** were set to the read-only mode before entering the suspended state, the optical disc drive **21** will operate in the read-only mode when the notebook PC **10** resumes its operation. The OS, which was operating in the notebook PC **10**, will resume its operation in the previous state before entering the suspended state, while maintaining the recognition and setting of the optical disc drive **21**. Even when the optical disc drive **21** was in the state where the read-only release command had been receive at the time when the notebook PC **10** resumes its operation, since the predetermined time of the internal timer function of the optical disc drive **21** has elapsed by the time the OS resumes its operation, no further read-only release command is received, thereby ensuring the security.

If the setting of the R/O status bit **207** cannot be maintained when the optical disc drive **21** is powered off, the same process as the SMI service routine **257** may be executed to set the optical disc drive **21** again to the read-only mode when the notebook PC **10** resumes its operations after the suspended state and the optical disc drive **21** is powered on again. Even in this case, by the time the OS resumes its operation, the optical disc drive **21** will not have received the read-only setting command or the read-only release command by the timer function of the optical disc drive **21**.

The operations described above are all performed by hardware and the BIOS (the POST **255** and the SMI service routine **257**) and the OS and the application software are not involved in the operations. For this reason, regardless of the type, setting, and the like of the OS, even when another OS different from the OS normally installed in the notebook PC **10** is loaded, the optical disc drive does not operate in the rewritable state if the settings of the optical disc drive **21** included in the setting information **261** is "R/O." Even when the optical disc drive **21** is attached to the notebook PC **10** and is then powered on, or when the optical disc drive **21** is connected in a hot swappable manner to the swappable bay **123**, and when an optical disc drive without the security function wherein the drive can be set to the read-only mode, the optical disc drive does not operate in the rewritable state if the settings of the optical disc drive **21** included in the setting information **261** is "R/O."

The present invention has been described with reference to the example of an optical disc drive; however, the present invention can be applied to a rewritable storage unit connected to a PC, such as a hard disc drive or a semiconductor storage unit. In addition, the present invention can be applied to any interface standards capable of connecting a rewritable storage unit to a PC, such as IDE, USB, PCMCIA, CardBus, miniPCI, or Express Card. These storage units may be configured such that a recording medium alone is removable from the PC **10** or that they are removable from the PC **10** integral with a recording medium and a driving unit. What is important to notebook here is that the write inhibit command is sent to the storage unit at a stage where the BIOS is being executed in the PC, that the storage unit is operated in the read-only mode in response to the write inhibit command by the BIOS, and that it is impossible to release the operation of the storage unit in the read-only mode in a state where the OS is in operation. As to a storage unit capable of hot swapping in a state where the OS is in operation, it may be more preferable that hardware on the PC side detects the connection of the storage unit. By doing so, it becomes possible to set the storage unit to the read-only mode by the control of the BIOS independent from the OS and the application software.

In FIGS. **5** and **7**, when the settings of the optical disc drive **21** included in the setting information **261** is "HIGH," an operation of invalidating the connecting portion of the IDE port **113** to the optical disc drive **21** was performed (Blocks **319** and **521**). Instead, it may be configured such that all the read and write commands sent from the IDE port **113** are not executed within the optical disc drive **21** and an error is replied to the IDE port. In such a case, the optical disc drive **21** needs to be able to perform such operations and the POST **255** and the SMI service routine **257** need to be able to send commands for causing the optical disc drive **21** to perform such operations.

In addition, it is necessary to prevent users from arbitrarily modifying the settings of the optical disc drive **21** included in the setting information **261**. In the embodiment described above, the settings are set at the assembling step in a factory. The settings may be set by a supervisor using a supervisor password that only the supervisor can use but other users are not allowed to use.

The present invention has been described with reference to specific embodiments illustrated in the drawings. However, the present invention is not limited to these embodiments, and of course, so long as the effects provided by the present invention are obtained, any kind of well known configuration can be employed.

The present invention can be applied to a computer that uses a rewritable storage unit that is used by being removably attached to the computer.

If not otherwise stated herein, it is to be assumed that all patents, patent applications, patent publications and other publications (including web-based publications) mentioned and cited herein are hereby fully incorporated by reference herein as if set forth in their entirety herein.

What is claimed is:

1. A method comprising:

setting a security for an optical drive using a program where a control by an operating system of the apparatus is not being performed, said setting further comprising:

initializing the optical drive;

receiving a response to the initializing including a device identification and confirming the presence of a security function on the optical drive by the program of an apparatus, wherein the security function provides that the optical drive may be set to one or more of read-only mode and writeable mode, said confirming being performed in a state where a control by an operating system of the apparatus is not being performed;

when it is determined that the optical drive has the security function, setting the security on the optical drive by the program to a security setting maintained by the program; and

transferring the control from the program to the operating system

wherein the security setting is maintained for the optical drive;

wherein the optical drive executes a security command in a predetermined period of an initialization command being received from the program at the optical drive during execution of a Power-On Self Test.

2. The method of claim **1**, wherein the program comprises a BIOS and wherein said confirming the presence of the security function and said setting the security are performed while the BIOS is executing a Power-On Self Test.

3. The method of claim **2**, wherein the security function comprises:

a function that autonomously sets the security by the optical drive; and

a function that cancels or changes a setting of the security upon receipt of a specific command from the apparatus.

4. The method of claim **3**, further comprising the steps of:

acquiring unique information of the optical drive by the BIOS; and

encoding the specific command by using the unique information.

5. The method of claim **2**, further comprising the step of:

providing the apparatus with setting information comprising:

a first setting which completely restricts access to the optical drive;

a second setting which does not restrict access to the optical drive; and

a third setting which restricts the optical drive to a read-only mode.

6. The method of claim **5**, wherein, when the optical drive is determined to have the security function and the setting information indicates the first setting, the BIOS invalidates an input/output port of the apparatus in relation to the optical drive at the step of setting the security.

7. The method of claim **5**, wherein, when the optical drive is determined to possess the security function and the setting information indicates the third setting, the BIOS sets the optical drive to execute the read-only mode at the step of setting the security.

8. The method of claim **5**, wherein, when the optical drive is determined to possess the security function and the setting information indicates the second setting, the BIOS permits the apparatus to make non-restricted access to the optical drive at the step of setting the security.

9. The method of claim **5**, wherein, when the optical drive is determined to possess no security function and the setting information indicates either the first or the third setting, the BIOS invalidates an input/output port of the computer in relation to the optical drive at the step of setting the security.

10. The method of claim **1**, wherein the step of confirming the presence of the security function is performed based on information sent from the optical drive to the apparatus in response to an initialization command sent from the apparatus to the optical drive.

11. A method comprising:

directing an apparatus to securely set an optical drive to a read-only mode using a program where a control by an operating system of the apparatus is not being performed, said directing further comprising:

permitting execution of an operating system;

detecting that the optical drive is connected to the apparatus during the execution of the operating system;

interrupting control of the operating system and transferring control of the apparatus from the operating system to the program in response to said detecting;

confirming the presence of a security function on the optical drive by the program of the apparatus, wherein the security function provides that the optical drive may be set to one or more of read-only mode and writeable mode, said confirming being performed in a state where a control by the operating system of the apparatus is not being performed;

setting the optical drive to a security setting maintained by the program, the security setting being a read-only mode; and

transferring the control from the program to the operating system wherein the state of being set to the read-only mode is maintained for the optical drive;

wherein the optical drive executes a security command during interruption of the operating system of the apparatus.

12. An apparatus comprising:

a recording medium that stores an operating system;

a nonvolatile memory that stores a a program where a control by an operating system of the apparatus is not being performed;

a processor capable of switching between and execution of the operating system and the program;

a connecting portion which establishes a removable connection between an optical drive and the apparatus, the optical drive having a security function providing that optical drive may be set to one or more of read-only mode and writeable mode; and

a storage section maintained by the program capable of storing setting information for the optical drive;

wherein, when it is determined that the optical drive is connected to the connecting portion and has the security function, the processor executes the program to initialize the optical drive and sets the optical drive to a read-only

mode for the optical drive according to the setting information maintained by the program;

wherein the optical drive executes a security command in a predetermined period of an initialization command being received from the program at the optical drive during execution of a Power-On Self Test.

13. The apparatus of claim **12**, wherein the connection portion connects the optical drive to the apparatus via a standardized interface.

14. The apparatus of claim **12**, wherein the optical drive is configured to have a construction comprising:

a recording medium and a driving portion of the optical drive that are integrally detachable from the apparatus; or

a recording medium of the optical drive that is detachable from the driving portion of the optical drive.

15. The apparatus of claim **12**, further comprising:

a detecting portion that detects that the optical drive unit is connected to the connecting portion during execution of operation of the operating system;

wherein, when the detecting portion has detected the connection of the optical drive, the processor receives an SMI to transfer control from the operating system to the program, wherein the program is a BIOS, and the optical drive is set to read-only mode.

16. A non-signal program storage device readable by machine embodying a program of instructions executable by the machine to perform acts for setting a security for an optical drive using a program where a control by an operating system of the apparatus is not being performed, said acts comprising:

initializing the optical drive;

receiving a response to the initializing including a device identification and confirming the presence of a security function on the optical drive by the program of an apparatus, wherein the security function provides that the optical drive may be set to one or more of read-only mode and writeable mode, said confirming being performed in a state where a control by an operating system of the apparatus is not being performed;

when it is determined that the optical drive has the security function, setting the security on the optical drive by the program to a security setting maintained by the program; and

transferring the control from the program to the operating system wherein the security setting is maintained for the optical drive;

wherein the optical drive executes a security command in a predetermined period of an initialization command being received from the program at the optical drive during execution of a Power-On Self Test.

* * * * *