C. F. NEWPORT.

WATER HEATER OR BOILER.

APPLICATION FILED MAY 15, 1911.

1,068,694.

Patented July 29, 1913.

5 SHEETS—SHEET 1.

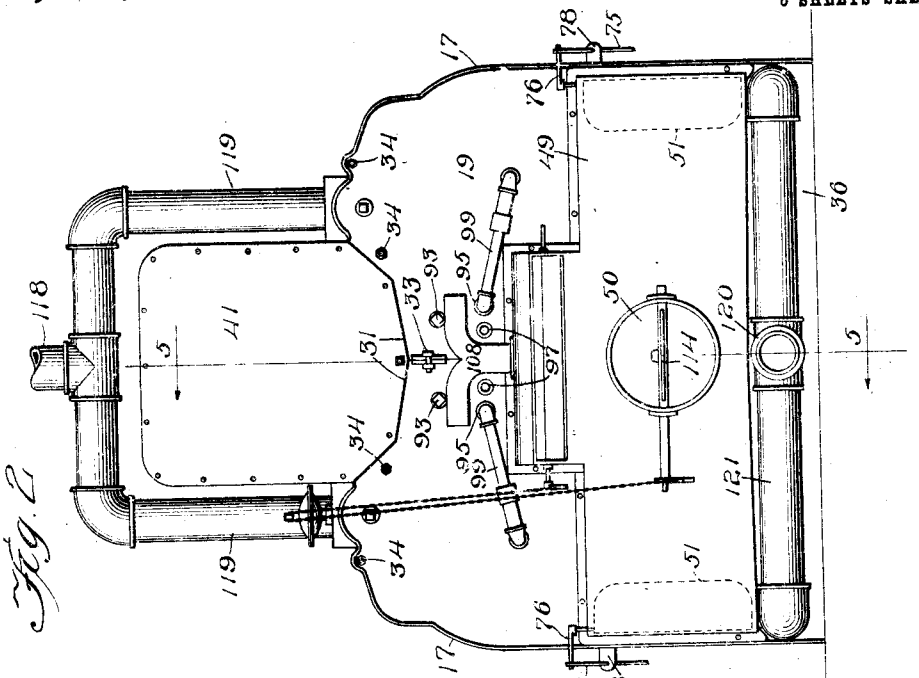

Fig. 2.

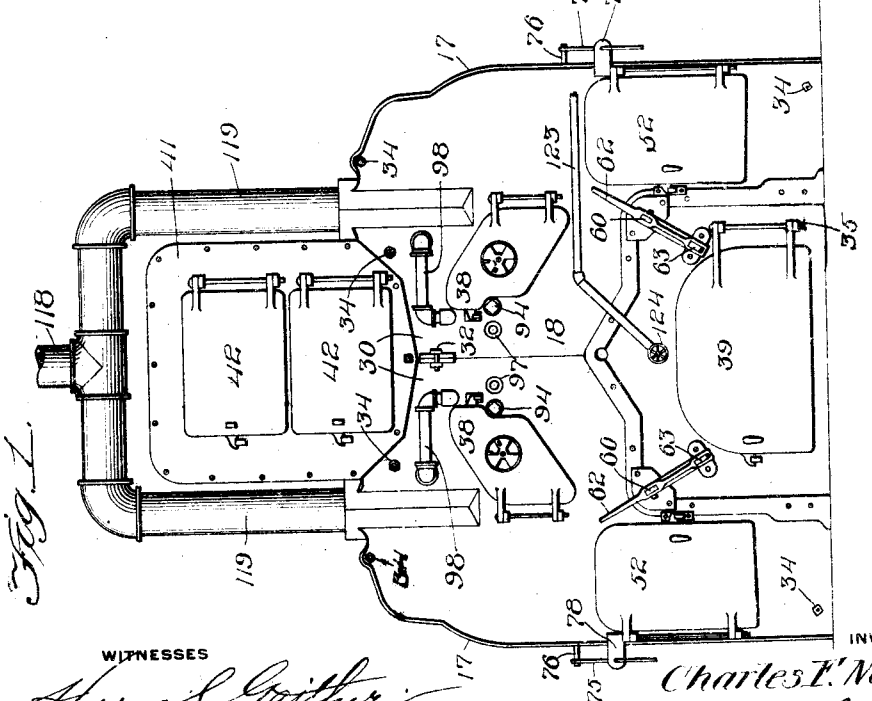

Fig. 1.

WITNESSES

Harry S. Gaither

William Goldberger.

INVENTOR

Charles F. Newport

by William b. Hall.

Atty

C. F. NEWPORT.

WATER HEATER OR BOILER.

APPLICATION FILED MAY 15, 1911.

1,068,694.

Patented July 29, 1913.

5 SHEETS—SHEET 2.

Fig. 3

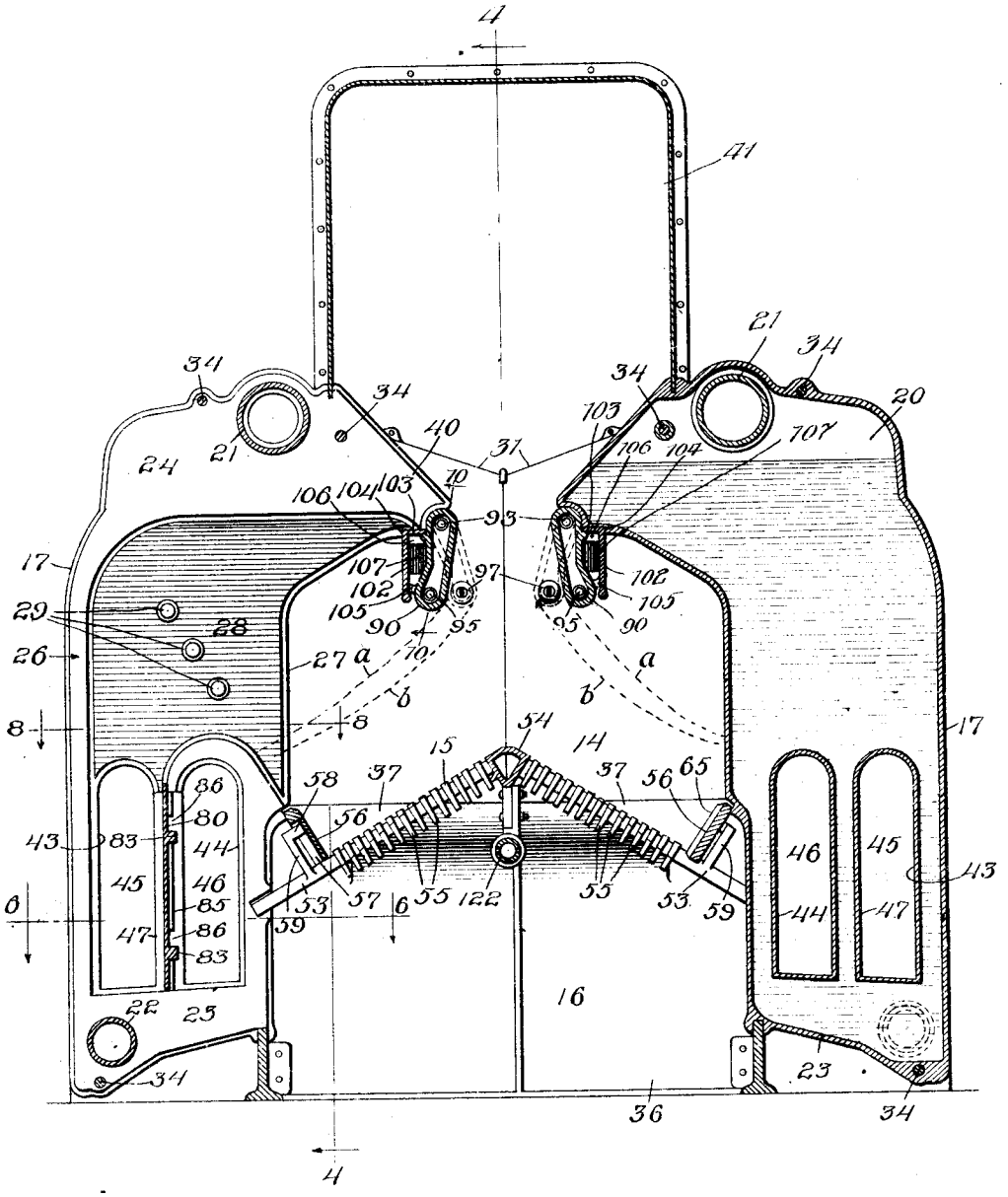

WITNESSES

Harry S. Gaither

William Goldberger

INVENTOR

Charles F. Newport

William L. Hall

by

Atty

C. F. NEWPORT.

WATER HEATER OR BOILER.

APPLICATION FILED MAY 15, 1911.

1,068,694.

Patented July 29, 1913.

6 SHEETS—SHEET 3.

Fig. 4.

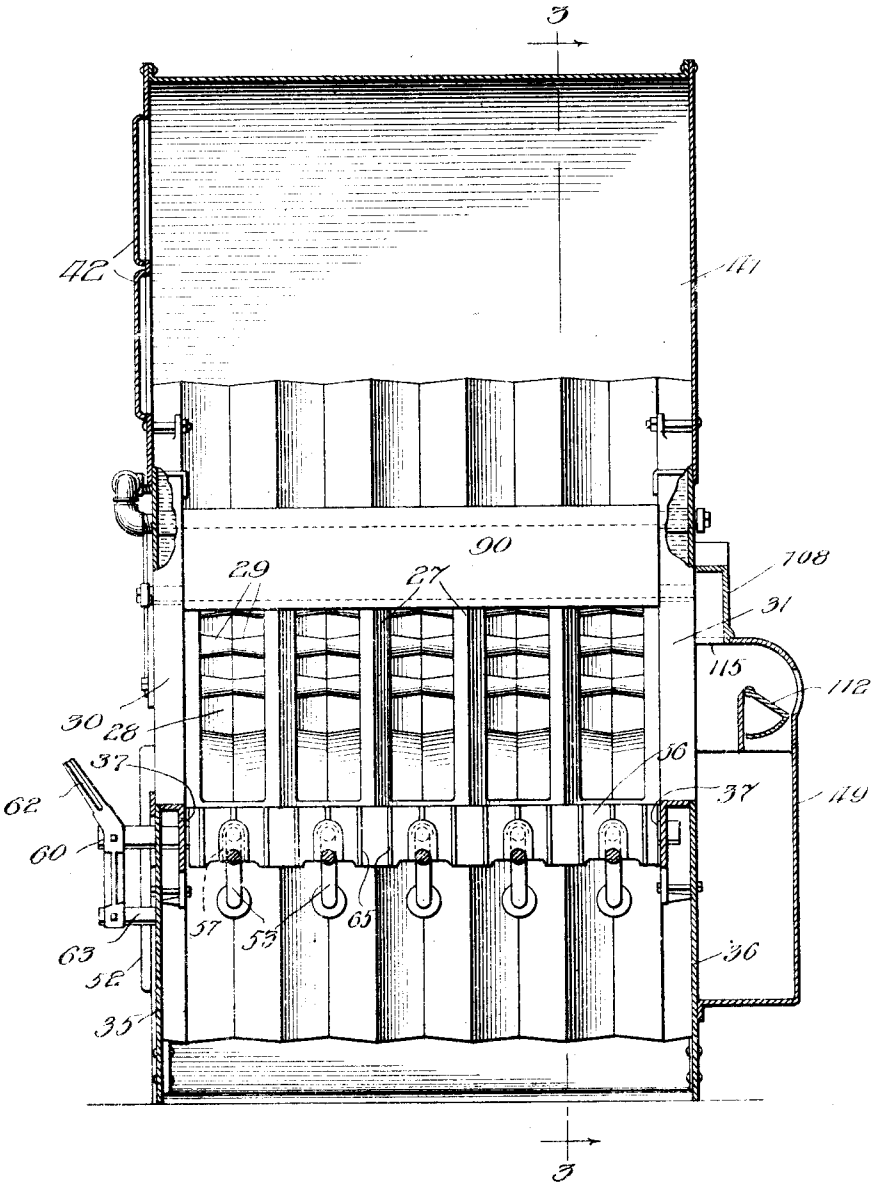

WITNESSES

Harry S. Gaither

William Goldberger

INVENTOR

Charles F. Newport

by William L. Hall.

Atty

C. F. NEWPORT.

WATER HEATER OR BOILER.

APPLICATION FILED MAY 15, 1911.

1,068,694.

Patented July 29, 1913.

5 SHEETS—SHEET 4.

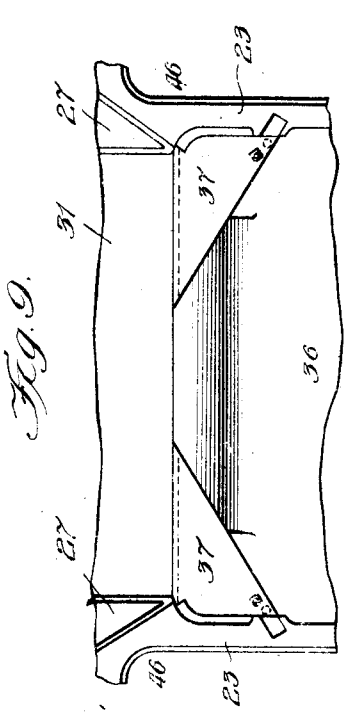

Fig. 9.

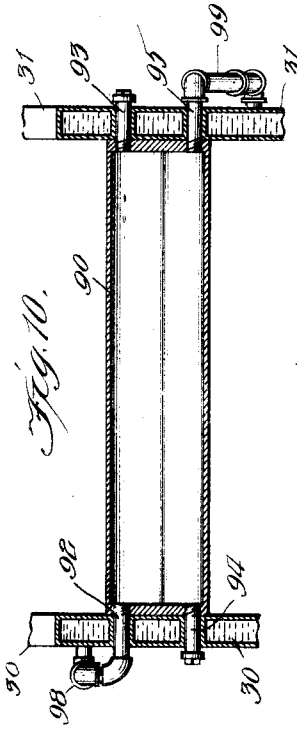

Fig. 10.

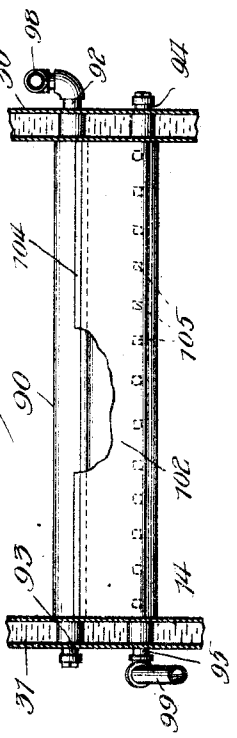

Fig. 11.

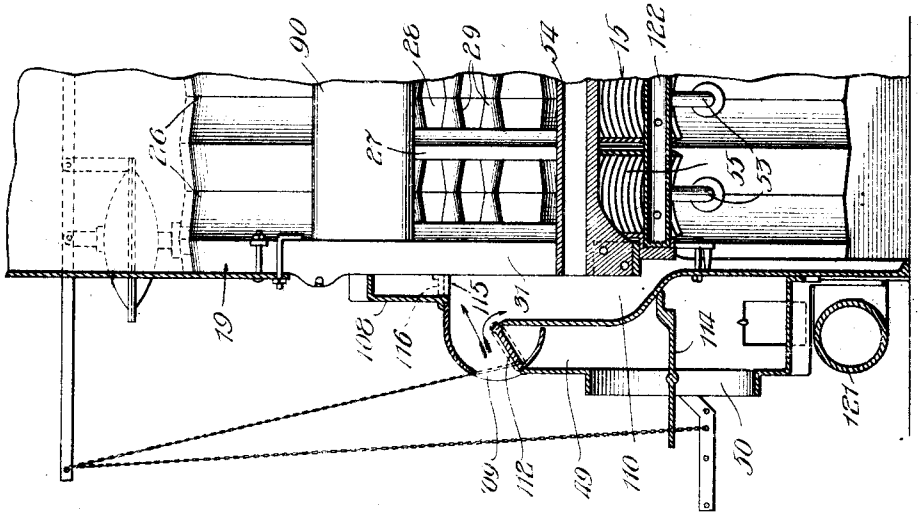

Fig. 5.

WITNESSES

Harry S. Gaither

William Goldberger

INVENTOR

Charles F. Newport

by William L. Hall,

Atty

C. F. NEWPORT.

WATER HEATER OR BOILER.

APPLICATION FILED MAY 15, 1911.

1,068,694. **Patented July 29, 1913.**

6 SHEETS—SHEET 5.

Fig. 6.

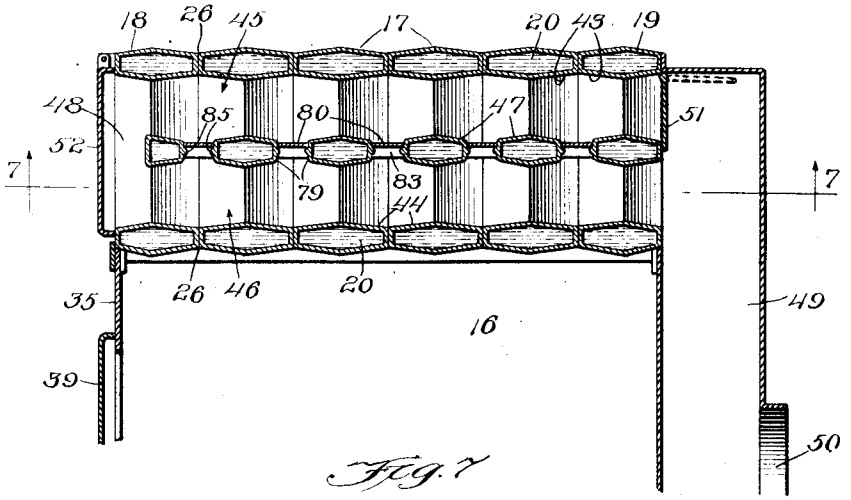

Fig. 7

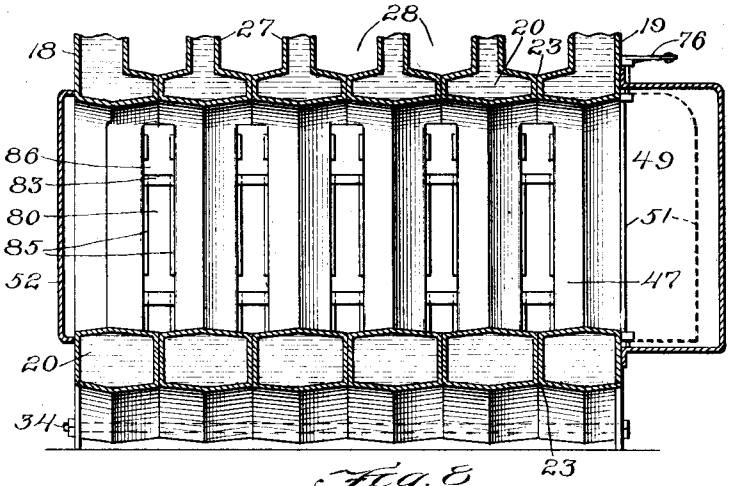

Fig. 8

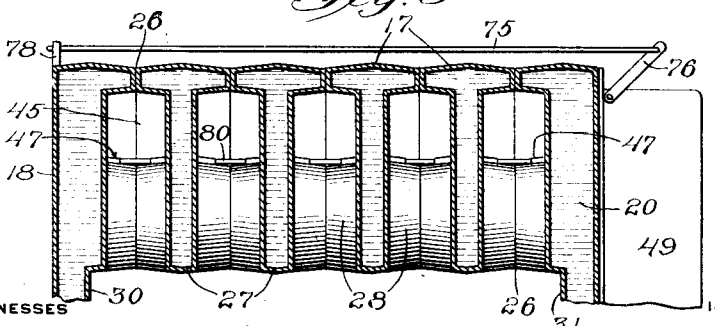

Fig. 1a

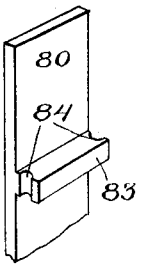

WITNESSES

Harry S. Gaither

William Goldberger

INVENTOR

Charles F. Newport

by William L. Hall.

Atty

UNITED STATES PATENT OFFICE.

CHARLES F. NEWPORT, OF CHICAGO, ILLINOIS.

WATER HEATER OR BOILER.

1,068,694. Specification of Letters Patent. Patented July 29, 1913.

Application filed May 15, 1911. Serial No. 627,200.

To all whom it may concern:

Be it known that I, CHARLES F. NEWPORT, a citizen of the United States, and a resident of Chicago, in the county of Cook and State of Illinois, have invented certain new and useful Improvements in Water Heaters or Boilers; and I do hereby declare that the following is a full, clear, and exact description thereof, reference being had to the accompanying drawings, and to the characters of reference marked thereon, which form a part of this specification.

This invention relates to improvements in water heaters or steam boilers, more especially adapted to furnish hot water or steam to heating systems of buildings.

The invention relates more especially to improvements in the means for feeding the fuel to the fire box of the heater or combustion chamber and to an improved arrangement for admitting air to the fire box to support combustion, and to other features of construction as will more fully hereinafter appear.

My improvements are shown as applied to a sectional water heater of that kind wherein the water spaces of the heater are formed in cored out cast metal sections which are grouped and secured together with nipple connections between the same, in the manner of the sections of a steam or hot water radiator to permit intercirculation of water therethrough, and are so shaped that when brought together flues are formed through which the hot gases of combustion pass from the fire box to the exit flue. All of the improvements are adapted to heaters of this type while certain of them may be well adapted to heaters of other types.

The invention consists in the matters hereinafter set forth and more particularly pointed out in the appended claims.

In the drawings, Figure 1 is a front elevation of a water heater embodying my invention. Fig. 2 is a rear elevation thereof. Fig. 3 is a transverse vertical section on line 3—3 of Fig. 4, the same being taken in a plane between adjacent heater sections at one side of said figure and through one of the heater sections at the other side thereof. Fig. 4 is a longitudinal vertical section on the line 4—4 of Fig. 3. Fig. 5 is a fragmentary central vertical section of the rear part of the heater, on the line 5—5 of Fig. 2. Fig. 6 is a fragmentary horizontal section on the line 6—6 of Fig. 3. Fig. 7 is a fragmentary vertical section on the line 7—7 of Fig. 6. Fig. 8 is a fragmentary horizontal section on the line 8—8 of Fig. 3. Fig. 9 is a fragmentary view of the inner face of the rear wall of the fire box and ash pit or chamber. Fig. 10 is a section on the line 10—10 of Fig. 3 through one of the adjustable throat pieces at the bottom of the feed magazine, and showing the manner of mounting the same and the manner of maintaining circulation of water therethrough. Fig. 11 is a rear face view of one of the throat pieces and an angle plate associated therewith to constitute, in connection with the throat piece, means for directing a hot blast of air against the fuel as it is fed into the fire box. Fig. 12 is a fragmentary perspective view of a removable plate by which to modify the path of the flue travel for the gases of combustion through the heater.

As shown in the drawings, the water heater is composed of two groups of cast metal sections, one at one side and the other at the other side of an intermediate fire box 14 equipped with a fuel supporting grate 15, with an ash pit 16 therebelow. Each group comprises the intermediate sections 17, 17 and the front and rear end sections 18, 19, respectively. Each of said sections is cored out to provide therein a water space 20, and the water spaces of adjacent sections communicate with each other through connecting nipples 21, 22 arranged at the bottoms and at the tops of the sections (Fig. 3). At their lower parts 23 below the fire box and at their upper parts 24 above the fire box, as well as along their outer marginal parts 26, the sections 17, 18 and 19 are made of such thickness as to fit closely together, as best shown in Figs. 4, 6, 7 and 8, thereby leaving no spaces at these parts for the passage of heated gases between the sections. The central parts of the sections abreast the fire box, and extending from the inner side thereof to the thickened portions or rims 26 are made thinner, as shown at 27 (Figs. 3, 4, 5, 7 and 8) so as to form between the thinner portions lateral passages 28 for the heated gases that pass upwardly from the fire box. Said passages 28 conduct the heated gases to flues arranged at the sides of the heater, as will hereinafter appear. Baffle members consisting of lugs 29 or other obstructions

cast on or otherwise carried by the sections constitute means for breaking up the currents of heated gases as they pass from the fire box to the flues.

The front and rear sections 18 and 19, respectively, of the heater are each shown as made of two like parts, the lateral outer sides of which fit the end ones of the intermediate sections. The lateral inner sides 30 and 31, respectively, of the end sections are made thinner than the outer sides thereof and constitute the end walls of the fire box 14. They are joined at the center of the front and rear walls in any suitable manner, as for instance by the bolts 32, 33 which extend through lugs or flanges on the adjoining edges of said wall sections, as shown in Figs. 1 and 2. The ash pit front and rear walls 35, 36 are made of thinner uncored plates and the triangular dead plates 37, 37 (Figs. 3, 4 and 9) may be employed where the thinner ash pit walls extend above the lower sides of the grate to bring the same flush with the inner faces of the fire box end walls. The said intermediate and end sections may be attached together in assembled relation by means of the rods 34 which are arranged at the upper and lower ends of the sections, said rods having the form of headed bolts which are screw-threaded and provided with nuts to clamp the sections together. The fire box and ash pit are provided in their front walls with the usual doors 38 and 39, respectively. The said intermediate sections 17 are formed above the fire box 14 and at their inner sides with overhanging portions 40 (Fig. 3) between which the fuel is fed to the fire box 14 from a magazine 41 located above and supported in any suitable manner on the said sections, said magazine having at its front end one or more openings closed by doors 42, 42 through which openings fuel is fed to the magazine. Each of said sections 17, 18 and 19 is provided at its lower end, and generally below the level of the fire box, with two openings 43, 44 located one laterally outside the other, and said openings, when the sections are assembled and fixed together, constitute outer and inner flues 45, 46 through which the heated gases of combustion pass from the fire box 14 on their way to the exit flue of the heater. Said flues are separated by partitions 47 which are also cored out to constitute a portion of the water space of the heater. At the front end of the heater the flues 45, 46 communicate with each other through a transverse passage 48 (Fig. 6). The rear ends of said inner flues 46 communicate directly with a smoke box 49 having an opening 50 by which to connect the exit pipe thereto. The rear ends of the outer flues 45 are also adapted to communicate directly with the smoke box, but said rear ends of the flues 45 are normally closed by what may be termed direct draft dampers 51, as most clearly shown in Fig. 6. At the front of the heater are arranged doors 52 which close openings through which access may be had to the flue passages 45, 46 and associated parts.

The lateral passages 28 formed between the thinner portions or fingers 27 of the sections communicate at their outer sides with the outer flues 45, so that the heated gases of combustion pass from the fire box, through the passages 28, directly to said outer flues. Normally, with the direct draft damper 51 closed, as shown in full lines in Fig. 6, the paths of flue travel are forwardly through the outer flues 45, through the connecting passages 48 and thence rearwardly through the inner flues 46, directly to the smoke box. In order to increase the effectiveness of the draft, as when starting the fire or when operating under unusual conditions, the direct draft dampers 51 may be opened to the dotted line position indicated in Figs. 6 and 7, whereupon the heated gases of combustion will pass directly rearwardly through the outer flues 45 to the smoke box. The said direct draft dampers 51 may be operated from the front of the furnace through the medium of endwise reciprocable actuating rods 75 attached at their rear ends to crank arms 76 connected with the dampers, said rods 75 extending at their forward ends through suitable guides 78 at the front of the heater, as shown in Figs. 1, 2 and 8.

In order to adjust the path of flue travel of the heated gases of combustion to different conditions of draft, and also to fuels of different characters, the partitions 47 may be provided at different parts in their lengths with narrow, longitudinally spaced vertical openings 79, 79 adapted to be closed by removable members 80, 80. Each of said closure members 80 consists of a narrow, elongated plate arranged to cover one of the openings 79 between adjacent sections of the partition 47. The said removable plates 80 are shown as removably fixed in place by means of lugs 83, (Figs. 6, 7 and 12) which extend laterally therefrom near their tops and bottoms, and are provided at their ends with notches 84, 84 to fit over ribs 85, 85 on the adjacent faces of the partition sections at the partition openings 79. In order to permit ready removal of the said plates the said ribs 85 may be discontinued at 86 to form upper and lower open spaces or notches of sufficient size that when the plates are raised to bring the lugs 83 opposite the open spaces the plates may be laterally removed. In replacing the plates the lugs 83 are passed laterally through the notches 86 until the notches 84 are in line with the ribs 85, whereupon when the

plates are dropped the lugs drop below the notches 86 whereby the said plates are removably locked in place. When said removable plates are employed the adjustment of the path of flue travel will usually be effected by first removing the forwardmost one or more of the plates 80 so as to thereby afford communication from one flue to the other at points intermediate the ends of the flues and thereby shorten the path of flue travel. One or more of said plates may be thus removed to vary the path of the flue travel to conform to different conditions of draft, or to suit different kinds of fuel. In some instances all of said plates may be thus removed. Thus it will be seen that the path of flue travel is variable or adjustable within wide ranges to adapt the heater to different conditions of draft and fuel. Access to the removable partition plates 80 may be readily had through the door openings of the front doors 52, 52 before referred to.

The furnace grate 15 shown comprises the obliquely arranged rocking bars 53, 53 which incline downwardly and outwardly from a central tubular ridge bar 54 to the heater sections and are mounted at their lower and upper ends in sockets formed in the inner sides of the heater sections 17 and the said rigid bar 54, respectively. Said rocker bars carry grate fingers 55, 55 of any usual or preferred construction. Said grate bars may be rocked on their axes to shake the fire bed by means of the actuating bars 56, 56 arranged one at each side of the lower part of the fire box and extending from front to rear thereof above the grate bars. The said actuating bars are disposed in planes at right angles to the planes of the rocking grate bars, and are provided on their outer sides with transverse recesses 57 which receive the inturned ends 58 of crank arms 59 of the rocking grate bars. The arrangement is such that endwise reciprocation of the actuating bars 56 transmits, through the arms 59, a rocking motion to the grate bars. The said grate bar actuating bars 56 have forward extensions 60 that extend through the front wall 35 of the ash pit, and said extensions are pivoted to actuating levers 62 which are in turn pivotally mounted on lugs 63 attached in any suitable manner to and projecting forwardly from the front wall 35 of the ash pit. The said recesses 57 are made slightly wider than the diameter of the inturned ends of the arms 59 so as to thereby permit slight lost motion of said actuating bars relatively to said arms to stir the ashes. The inner faces of said actuating bars may be formed with a series of transverse ribs or flanges 65 which are provided to agitate or stir the ash bed at the lower sides of the grate when the grate bars are rocked, and thus effectively prevent the ashes and clinkers accumulating at the lower ends of the grate bars, and facilitating the discharge thereof through the grate to the ash pit below.

The upper inclined faces of the overhanging parts of the sections constitute the tapered lower sides of the magazine 41 which direct the fuel to the feed throat of the magazine. In order to control the feed of the fuel from the magazine to the fire box I have provided at the feed throat of the fire box movable throat pieces 90, 90 shown as located one at each side of said throat and extending from front to rear of the heater. The said throat pieces are transversely elongated and are hollow so as to be water cooled. They are mounted at their ends, near their upper sides, on pivots which are supported in the front and rear walls of the fire box, whereby the lower sides of said throat pieces may be adjusted toward and away from each other to vary the effective feed opening of the throat. As best shown in Figs. 10 and 11, the throat pieces are pivotally mounted on nipples 92, 93 which extend, respectively, through the front and rear walls of the fire box, and are designed to be held at their lower sides in adjusted positions relatively to each other by other nipples 94, 95, each adapted to extend through one or the other of two or more laterally adjacent openings in the fire box end walls, as indicated in Figs. 1, 2 and 3. As shown in said figures, the throat pieces are adjusted with their lower sides spread away from each other, so as to thereby enlarge the feed throat of which said throat pieces constitute a part. The lower nipples therefore occupy the outer openings in the end walls, and the inner openings are closed by plugs 97. When the throat pieces are to be adjusted to the dotted line position indicated in Fig. 3 to contract the throat opening, then the lower holding nipples 94, 95 will extend through the inner holes in the end walls, or those shown as closed by plugs, and the outer holes will be closed by said plugs. Circulation of water is afforded through the hollow throat pieces by the pipes 98, 98 at the front end of the heater which connect the water space of the heater with the upper front, or pivot, nipples, (Figs. 1, 10 and 11) and the pipes 99, 99 which connect the water space of the heater with the rear holding nipples 95, 95 (Figs. 2, 10 and 11). The pivot members 93 and locking members 94 may, obviously, consist of solid plugs instead of being nipples.

The throat pieces will usually be adjusted to the dotted line or contracted position shown in Fig. 3 when burning hard coal of relatively small size, and thereby retard too free feed of the coal from the magazine to the fire box below. The full line position of the throat pieces shown in Fig. 3 is suitable in burning hard coal of larger size, or

when burning soft coal. The larger throat opening is desirable for the soft coal for the reason that coal of this character in its preliminary burning stages tends to expand and to choke the throat opening. The dotted lines *a* and *b* indicate, generally, the contour of the upper sides of the coal beds when the throat is adjusted for wide and more restricted openings, respectively.

An advantage of water cooling the throat pieces, in addition to preventing them becoming overheated, is to prevent the swelling of the fuel at the throat, when soft coal is used, which would occur if the throat walls be highly heated, and which would result in an obstruction to the feed of the coal. A further advantage of such water cooling of the throat pieces is to prevent the ignition of the coal, by heat transmitted thereto from the throat walls in the lower part of the magazine.

Another feature of construction which I preferably employ when burning soft coal is means for directing a jet or jets of heated air upon the upper surface of the coal bed as it is delivered into the fire box and at the zone where the volatile gases of the coal are distilled, and thus facilitate the preliminary burning of the coal. The means herein shown for thus effecting the discharge of air upon the coal bed as it first enters the fire box are made as follows: 102, 102 designate angle plates or bars which lie behind and parallel to the throat pieces when the latter occupy their outermost adjustment. Said angle plates extend from end to end of the fire box, as shown in Fig. 11. Their inwardly directed flanges 103 rest on ledges at the outer upper sides of the throat pieces, and they are provided at the outer sides of their upper edges with ribs 104 which engage complemental grooves in the overhanging portions 40 of the sections 17. The said angle plates may be slid into place, after the throat pieces are adjusted outwardly, through the openings closed by the doors 38. The lower margins of the plates 102 are held away from the lower sides of the throat pieces by the longitudinally spaced studs 105. There is thus formed behind each adjustable throat piece 90 and the adjacent angle plate 102 an air passage 106 which extends longitudinally of the throat pieces. The spacing of the lower margins of said plates from the throat pieces provides exit openings through which the air that passes into and is heated as it traverses the passages may be discharged from said passages upon the coal just after the coal has passed beneath the throat pieces into the fire box. Air may be supplied to the rear ends of the said hot air passages 106 through openings 107, 107 in the rear wall of the fire box to which fresh air may be directed by the branches of a Y-shaped fitting 108 (Figs. 2 and 5) which receives air through the draft opening 109 at the rear end of the furnace, as indicated by the arrow in Fig. 5. Air is supplied to support general combustion through said opening 109 and the passage 110 which leads to the ash pit below the furnace. The supply of air to the fresh air supply passage or flue 110 is controlled by a check valve 112 which is arranged to control the opening 109 and also to control a check draft passage to the smoke box 49, as indicated in Fig. 5. When the valve 112 is raised into a position to cut off the passage of air to the ash pit through the passage 110 cold air passes into the smoke box to check the draft, and thus check down the fire. The said check valve 112, and a damper 114 in the smoke box exit opening are shown as arranged to be simultaneously controlled by a controlling device which constitutes the subject matter of an application for United States Letters Patent, filed by me on the 19th day of May 1911, Serial Number 628,264 and need not be further herein described.

When the throat pieces are adjusted to their innermost positions, and the hot air passages behind the same are not employed, the openings 107 may be closed by any suitable removable closure. So also the Y-shaped air supply fitting will be removed, and the opening 115, which affords communication between the air supply passage 110 and said fitting may be closed by the plate 116, shown in dotted lines in Fig. 5. The rising pipe 118 through which hot water or steam is delivered to the heating system is branched, as shown in Figs. 1 and 2, its branches 119, 119 entering the opposite sides of the steam or water space at the top thereof. The return pipe 120 is likewise branched, with its branches 121 leading to the opposite sides of the water space at the bottom thereof. If desired, a perforated spray pipe 122 may be located in the ash pit just below the higher portion of the grate 15 and connected, through the front wall, as shown in Fig. 1, with a supply pipe 123, whereby water may be sprayed on the ashes in the ash pit preparatory to removing the ashes. A valve 124 at the front of the heater controls the passage of water to said spray pipe.

In the operation of the heater, coal or other fuel is directed from the magazine 41 to the fire box and is burned on the grate 15, air being supplied to support combustion through the supply passage 110 and the hot air passages 106, if the latter be employed. The heated gases of combustion pass from the fire box or combustion chamber laterally and in opposite directions through the passages 28 to the flues 45, from whence, under normal operation, the heated gases pass forwardly through the flues 45 to the forward

ends of the flues 46 and thence to the smoke box 49. As before stated the path of the flue travel may be varied or controlled by removal of one or more of the partition plates 80, and also by the opening of the direct draft damper 51.

The intercommunicating cored-out heater sections constitute a boiler, which, so far as certain features of the invention are concerned may be varied in its construction. The construction shown, however, of the sectional boiler, constitutes a convenient, inexpensive and efficient arrangement which is preferred. Certain of other details described and shown are capable of variation within the scope and spirit of the invention.

I claim as my invention:—

1. A water heater or the like comprising a boiler, a fire box, a single fuel magazine above the boiler, horizontally elongated throat pieces arranged at the bottom of the magazine and between the same and the fire box and constituting the sides of the throat of the magazine through which the fuel is delivered from the magazine to the fire box and coöperating with each other to constitute a single throat, means for adjusting the throat pieces toward and from each other and to hold them in adjusted relation, said throat pieces being vertically hollow for a substantial distance above their lower edges, and means for water cooling the throat pieces.

2. A water heater or the like comprising a fire box, a boiler having water spaces arranged at the sides of the fire box, a single fuel magazine above the boiler and communicating with the latter through a throat arranged centrally beneath the magazine, horizontally elongated, hollow throat pieces coöperating with each other to constitute the sides of the magazine throat, means for pivotally mounting said throat pieces at their upper sides to swing toward and from each other at their lower sides, means for holding the lower sides of said throat pieces at fixed adjusted distances apart, said throat pieces occupying nearer a vertical than a horizontal plane in both positions of adjustment, and means for water cooling said throat pieces.

3. A water heater or boiler comprising a fire box, a boiler having water spaces arranged at the sides of the fire box, a fuel magazine above the fire box and communicating with the latter through a throat arranged centrally beneath the magazine, horizontally elongated, hollow throat pieces constituting the sides of the magazine throat, means for pivotally mounting said throat pieces at their upper sides to swing toward and from each other at their lower sides, means for holding the lower sides of said throat pieces at fixed adjusted distances apart, and means affording communication between the hollow throat pieces and the water space of the boiler.

4. A water heater or boiler comprising a fire box, a boiler, a single compartment fuel magazine above the fire box and communicating with the latter through a throat arranged centrally beneath the magazine, horizontally elongated, hollow throat pieces constituting the sides of the magazine throat, pivot devices extending through the walls of the fire box and pivotally supporting the throat pieces to swing toward and from each other at their lower sides, locking devices independent of the pivot devices extending through openings in the fire box walls to hold the lower sides of the throat pieces at fixed adjusted distances apart, and pipe connections between certain of said pivot and locking devices at opposite ends of the hollow throat pieces and the water space of the heater to afford circulation of water through the throat pieces.

5. A water heater or boiler comprising a fire box, a boiler having water spaces arranged at the sides of the fire box, a fuel magazine above the fire box and communicating with the latter through a throat, horizontally elongated, hollow throat pieces constituting the sides of the magazine throat, pivot devices extending through the walls of the fire box for pivotally supporting the throat pieces to swing toward and from each other at their lower sides, locking devices extending through the fire box walls to hold the lower sides of the throat pieces at fixed adjusted distances apart, and pipe connections between certain of said pivot and locking devices at the opposite ends of the hollow throat pieces and the water space of the heater to afford circulation of water through the throat pieces, the pipe connections at one end of the heater which communicate with the lower sides of the throat pieces being of telescopic construction.

6. A water heater or boiler comprising a fire box, a boiler, a fuel magazine above the fire box, horizontally arranged throat pieces at the lower side of the magazine between which is formed a throat through which fuel is delivered from the magazine to the fire box, and having means for adjusting them toward and from each other, and removable means adapted to coöperate with the outer sides of the throat pieces when adjusted away from each other to receive air from the exterior of the heater and direct heated air upon the fuel bed at the lower sides of said throat pieces.

7. A water heater or boiler comprising a fire box, a boiler, a fuel magazine above the fire box, horizontally arranged throat pieces at the lower side of the magazine between which is formed a throat through which fuel is delivered from the magazine to the

fire box, and having means for adjusting them toward and from each other, and members removably supported at the outer sides of the throat pieces, between which and the throat pieces are formed passages that receive air from the exterior of the heater, said members being separated at their lower sides from the throat pieces to constitute narrow slits through which heated air is discharged from said passages upon the fuel bed at the lower sides of said throat pieces.

8. A water heater or boiler comprising a fire box, a boiler, a fuel magazine above the fire box, horizontally arranged throat pieces at the lower side of the magazine between which is formed a throat through which fuel is delivered from the magazine to the fire box, and having means for adjusting them toward and from each other, members removably supported at the outer sides of the throat pieces, between which and the throat pieces are formed passages that receive air from the exterior of the heater, said members being separated at their lower sides from the throat pieces to constitute openings through which heated air is discharged from said passages upon the fuel bed at the lower sides of said throat pieces, and means at said slits for breaking up the currents of heated air issuing through the slits upon the fuel bed.

9. A water heater or boiler comprising a boiler composed of lateral boiler sections arranged at the sides of an intermediate fire box and provided at their upper sides with inwardly extending overhanging portions between which fuel is fed to the fire box below, a fuel magazine arranged above said overhanging portions and adjustable, elongated throat pieces depending from said overhanging portions of the group of sections, with means to adjust them toward and from each other, and between which is formed a throat through which fuel is fed from the magazine to the fire box below.

10. A water heater or boiler comprising a boiler composed of laterally separated sections arranged at the sides of an intermediate fire box, each provided at their upper sides with inwardly extending overhanging portions between which fuel is fed to the fire box below, a fuel magazine arranged above said overhanging portions and adjustable, elongated throat pieces at said overhanging portions of the group of sections, with means to adjust them toward and from each other, and between which is formed a throat through which fuel is fed from the magazine to the fire box below, and plates removably supported at the outer sides of the throat pieces to form between the same and the throat pieces air passages having means to receive air from the exterior of the heater, said plates being separated at their lower margins from the throat pieces to provide openings through which heated air is discharged from said passages to the fuel bed beneath the throat pieces.

11. In a water heater or boiler comprising a boiler composed of laterally separated sections arranged at the sides of an intermediate fire box and provided at their upper sides with inwardly extending overhanging portions between which fuel is fed to the fire box below, a fuel magazine arranged above said overhanging portions and adjustable, elongated throat pieces at said overhanging portions of the group of sections, with means to adjust them toward and from each other, and between which is formed a throat through which fuel is fed from the magazine to the fire box below, said throat pieces being hollow, and means to water cool said throat pieces.

In testimony that I claim the foregoing as my invention I affix my signature in the presence of two witnesses, this 9th day of May, A. D. 1911.

CHARLES F. NEWPORT.

Witnesses:
WILLIAM L. HALL,
WILLIAM GOLDBERGER.

Copies of this patent may be obtained for five cents each, by addressing the "Commissioner of Patents, Washington, D. C."