April 4, 1939. G. T. NELSON 2,153,475

FOOT FOR EXPANSION JOINT SETTING APPARATUS

Filed July 18, 1938

Fig. 1.

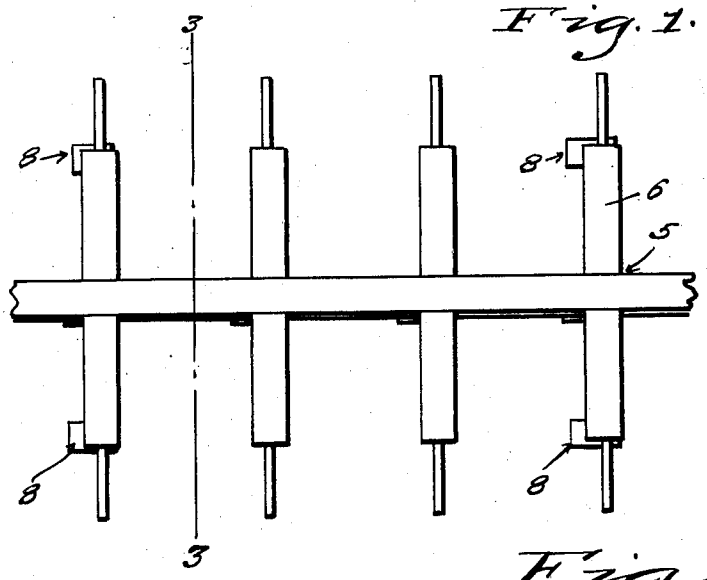

Fig. 2.

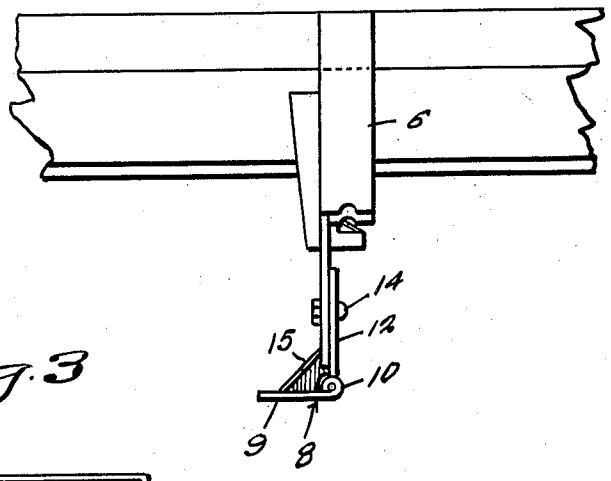

Fig. 3

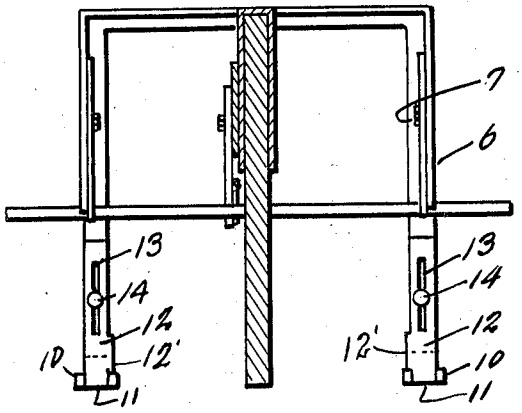

Inventor

George T. Nelson

By Clarence A. O'Brien and Hyman Berman

Attorneys.

Patented Apr. 4, 1939 2,153,475

UNITED STATES PATENT OFFICE

2,153,475

FOOT FOR EXPANSION JOINT SETTING APPARATUS

George T. Nelson, Lebanon, Tenn.

Application July 18, 1938, Serial No. 219,849

2 Claims. (Cl. 94—51)

This invention relates to feet especially adapted for use on expansion joint setting apparatus of the character set forth in my copending application for United States Letters Patent filed April 3, 1936, Serial No. 72,628, and allowed May 13, 1938, and has for the primary object the provision of foldable feet for supporting the assembly frame of said apparatus evenly on a surface and which will automatically assume parallelism with the legs of the assembly frame when the legs are withdrawn from concrete to permit easy lifting of the assembly frame and with less disturbance to the concrete.

With these and other objects in view, the invention consists in certain novel features of construction, combination and arrangement of parts to be hereinafter more fully described, and claimed.

For a complete understanding of my invention, reference is to be had to the following description and accompanying drawing, in which

Figure 1 is a fragmentary top plan view illustrating a portion of the assembly frame of a joint setting apparatus equipped with feet constructed in accordance with the present invention.

Figure 2 is a fragmentary side elevation illustrating the same.

Figure 3 is a sectional view taken on line 3—3 of Figure 1.

Referring in detail to the drawing, the numeral 5 indicates a fragmentary portion of the assembly frame of a concrete joint setting apparatus forming the subject matter of the application heretofore referred to and which includes a plurality of depending legs 6 each adjustable as to length. Each leg consists of separable sections slidably connected by a fastener 7. In order that the legs may rest evenly upon a surface the present invention is adapted thereto and consists of foldable feet 8 adjustably connected to said legs or the lower sections thereof and provide comparatively broad tread portions so that the feet will rest evenly on a surface and being adjustable on the legs permit of the assembly frame to be readily leveled when the device is resting on uneven ground. The feet are identical in construction and reference to one specifically is thought sufficient for all.

The foot indicated by the character 8 consists of a tread portion 9 having formed on one edge pintle barrels 10 interfitting with pintle barrels 11 formed on an attaching plate 12 provided with a slot 13 to receive a fastener 14 carried by the leg of the assembly frame so that the foot 8 may be adjusted upwardly and downwardly of the leg.

Formed on one edge of the plate 12, as at 12' is a substantially triangular shaped stop plate 15 adapted to abut the tread portion 9 when the latter is disposed horizontally or resting on a surface. However, when the assembly frame is lifted the tread portion 9 may swing downwardly moving into parallelism with the leg of the assembly frame so that the tread portion may move freely out of concrete which has been poured or placed over the foot while supporting the leg. The tread portion of the foot moving out of the concrete with the leg while in parallelism with the leg of the assembly frame will permit the latter to be easily lifted and reduce to a minimum the disturbance of the concrete. The stop plate 15 extends diagonally across the top face of the tread portion 9 when the latter is in engagement therewith.

It is believed that the foregoing description, when taken in connection with the drawing will fully set forth the construction and advantages of this invention to those skilled in the art to which such a device relates so that further detailed description will not be necessary.

What I claim is:

1. In combination with an assembly frame including legs of a concrete joint setting apparatus, feet adjustably secured on said legs for supporting the assembly frame on a surface and each including a hinged tread portion capable of assuming a position in parallelism with the leg on the lifting of the frame so that said tread portion may move out of concrete with the least amount of disturbance to the concrete, and a stop carried by the leg for the limiting of the hinging movement of said tread portion in one direction and for maintaining the tread portion horizontally on a surface when under the load of the assembly frame.

2. In combination with an assembly frame including legs of a concrete joint setting apparatus, feet adjustably secured to said legs for supporting the assembly frame on a surface and each foot including an attaching plate adjustably secured to the legs and a tread portion hinged thereto, and stop plates formed on the attaching plates to abut the tread portions for maintaining the tread portions in supporting position when under load.

GEORGE T. NELSON.