# United States Patent [19]

**Ramsey**

[11] **Des. 250,973**

[45] ** **Jan. 30, 1979**


[54] **COMBINED DRAWING BOARD AND INSTRUMENT CARRYING CASE**


[76] Inventor: **James D. Ramsey**, 616 N. Flores, Los Angeles, Calif. 90040



[**] Term: **14 Years**

[21] Appl. No.: **592,466**

[22] Filed: **Jul. 2, 1975**

[51] **Int. Cl.** ..... **D3—02**
[52] **U.S. Cl.** ..... **D87/1 R**
[58] **Field of Search** ..... D87/1 R, 5 B, 5 F; D8/154; 206/224; 150/1.6; 190/51, 41 R



[56] **References Cited**

U.S. PATENT DOCUMENTS

| | | | |
|---|---|---|---|
| D. 202,250 | 9/1965 | Hauser | D87/1 R |
| D. 237,021 | 9/1975 | Chilewich | D87/1 R |
| 1,369,439 | 2/1921 | Johnson | 206/224 |
| 3,620,362 | 11/1971 | Valdes | 206/224 |



*Primary Examiner*—Joel Stearman
*Assistant Examiner*—George P. Word
*Attorney, Agent, or Firm*—Gerald L. Price


[57] **CLAIM**

The ornamental design for a combined drawing board and instrument carrying case, as shown and described.

**DESCRIPTION**

FIG. **1** is a top perspective view of a combined drawing board and instrument carrying case showing my new design;
FIG. **2** is a bottom rear perspective view thereof;
FIG. **3** is a perspective view thereof with the lid partially opened and exposing the drawing board;
FIG. **4** is an exploded left side elevational view showing the lid and drawing board separated from the instrument storage section;
FIG. **5** is a perspective view with the lid removed and the drawing board slightly raised to expose a portion of the instrument storage section; and
FIG. **6** is a top plan view of the instrument storage section with the lid and drawing board removed.

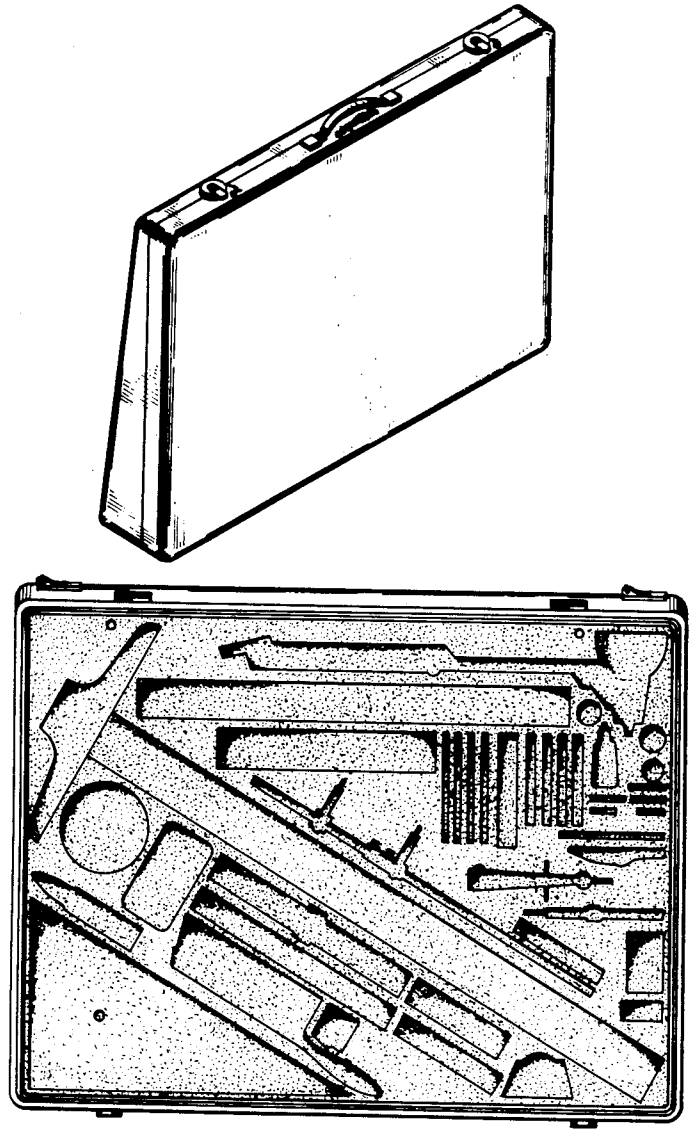

FIG. 1

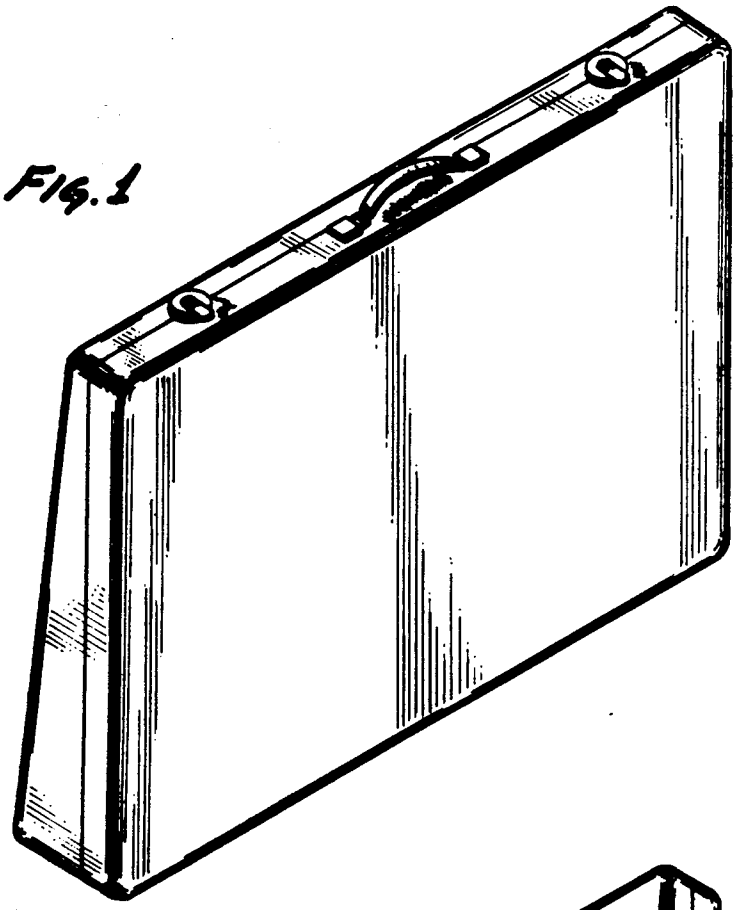

FIG. 2

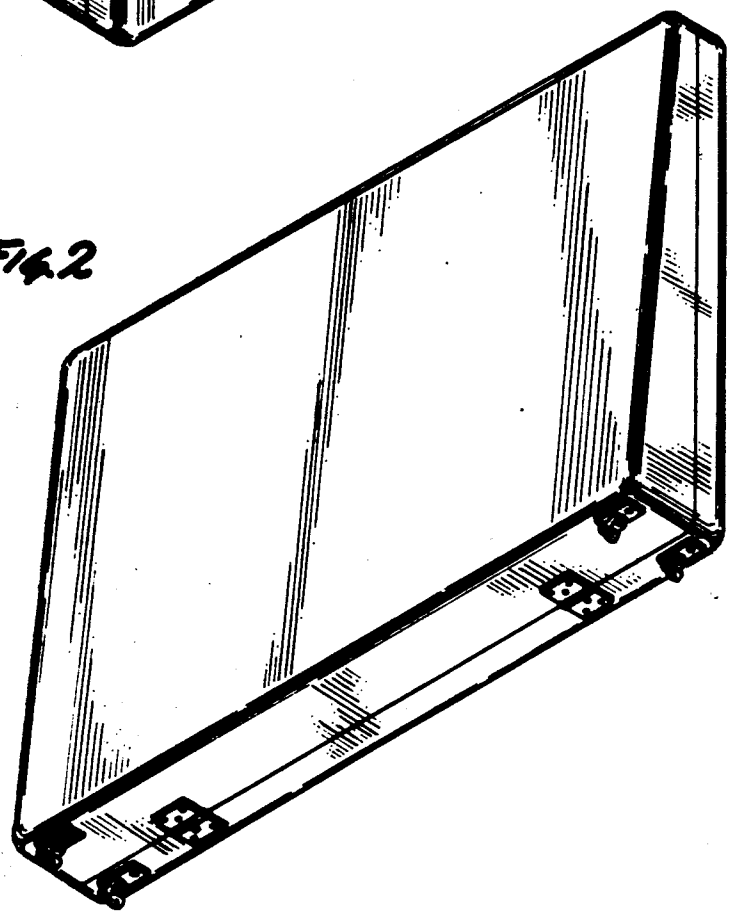

Fig. 3

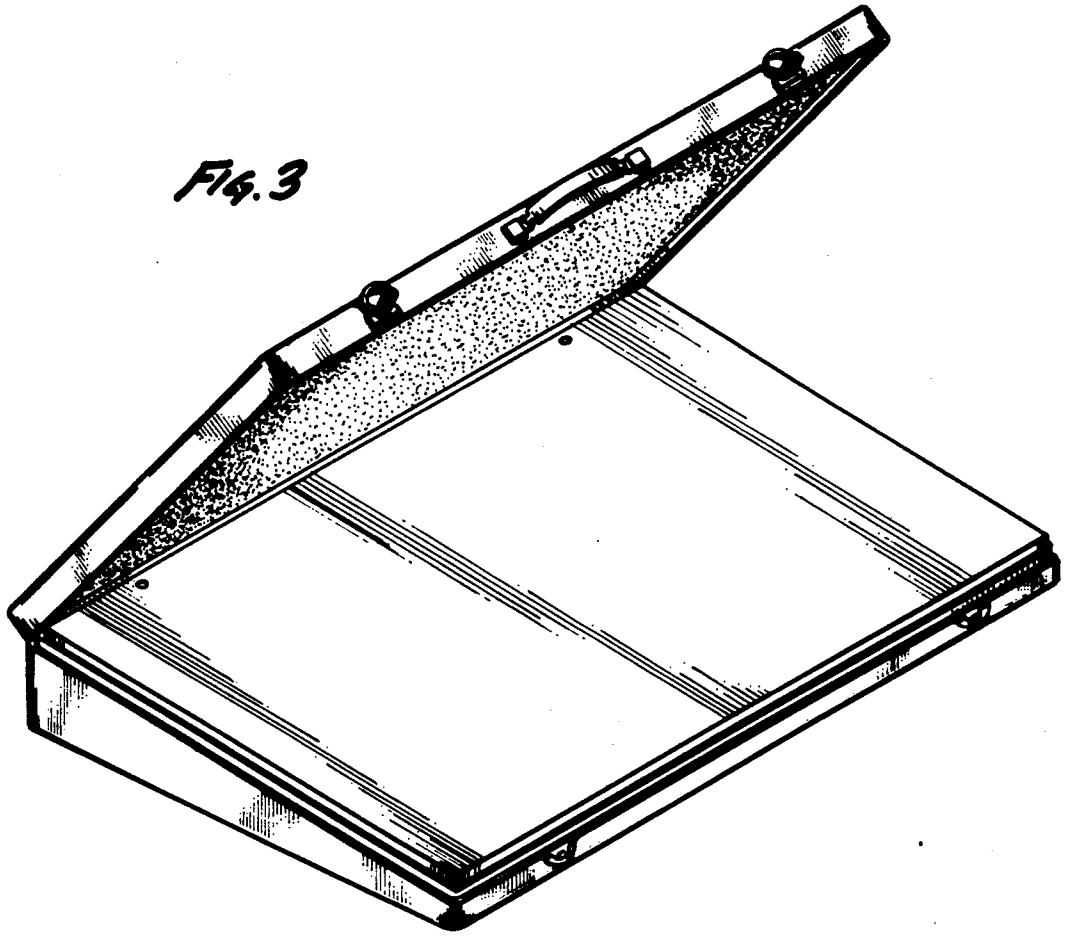

Fig. 4

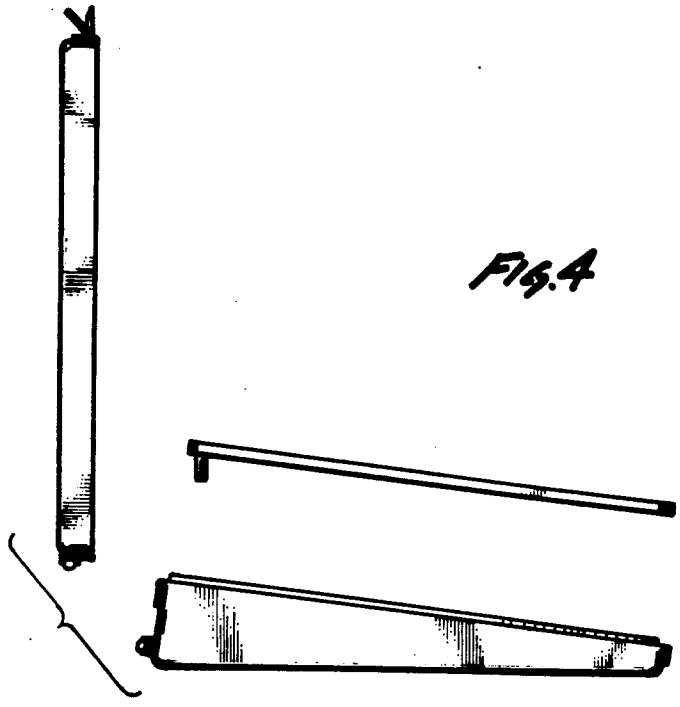

Fig. 5

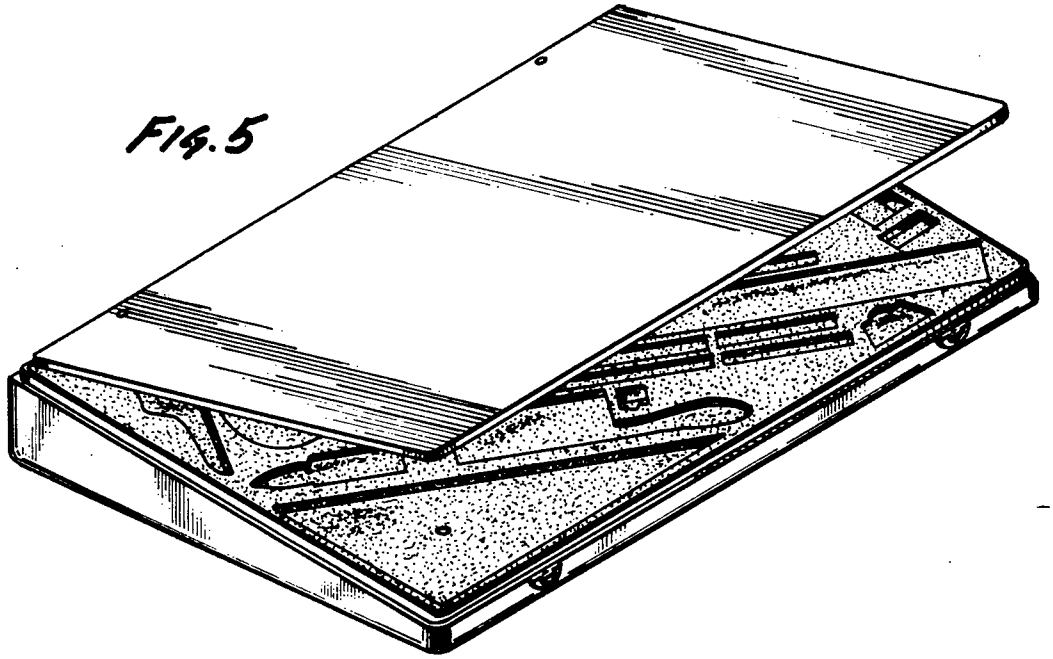

Fig. 6

