No. 791,010. PATENTED MAY 30, 1905.

W. J. CRAIG.

SEWING MACHINE CABINET.

APPLICATION FILED APR. 17, 1905.

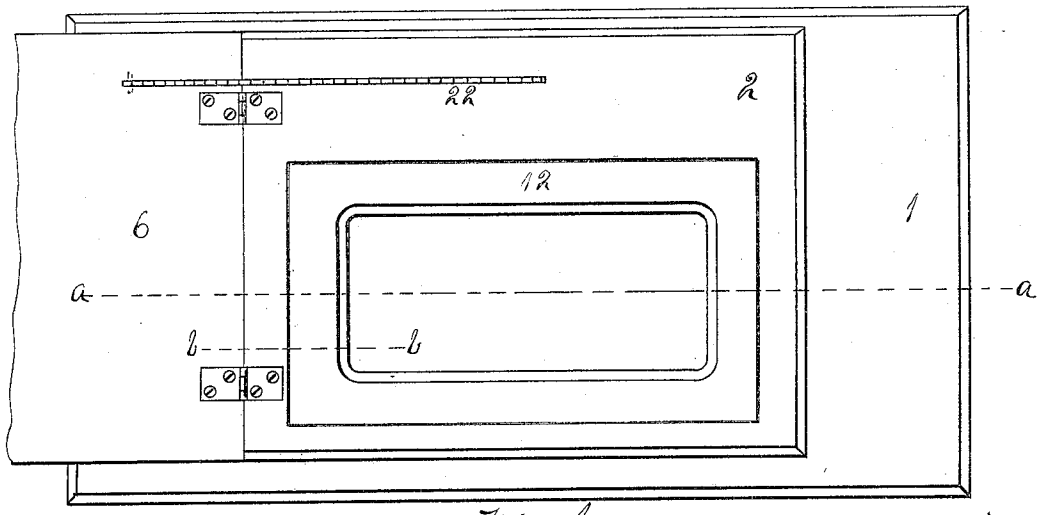


Fig. 1.

Fig. 2.

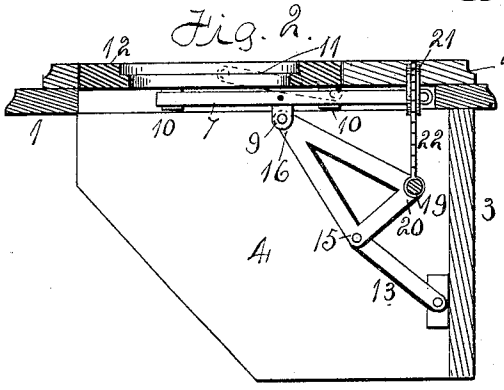


Fig. 3.

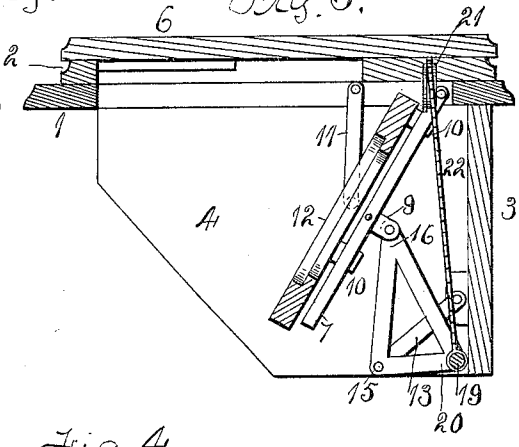


Fig. 4.

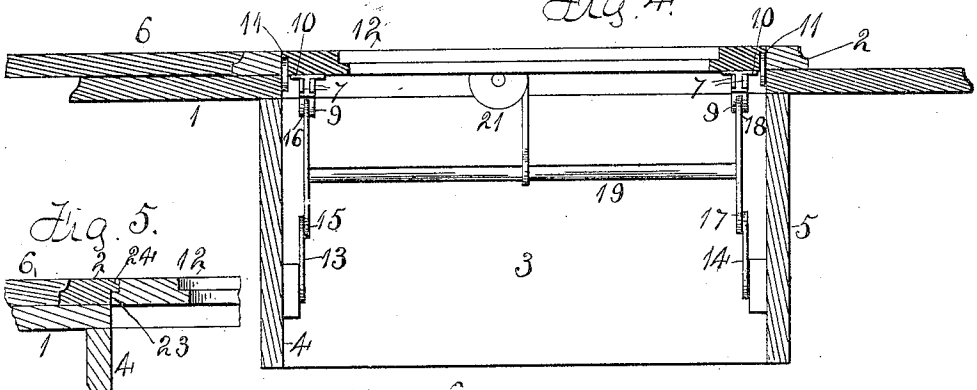


Fig. 5.




Fig. 6.

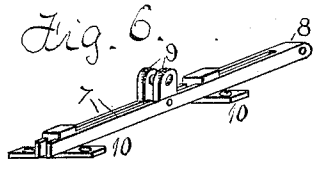


Witnesses:
H. J. Slagle
E. Bebel.

Inventor:
William J. Craig.
By A. O. Bebel
Attys.

PHOTO-LITHOGRAPHED BY SACKETT & WILHELMS LITHO. & PTG. CO. NEW YORK.

No. 791,010. Patented May 30, 1905.

# UNITED STATES PATENT OFFICE.

WILLIAM J. CRAIG, OF BELVIDERE, ILLINOIS.

## SEWING-MACHINE CABINET.

SPECIFICATION forming part of Letters Patent No. 791,010, dated May 30, 1905.

Application filed April 17, 1905. Serial No. 256,008.

*To all whom it may concern:*

Be it known that I, WILLIAM J. CRAIG, a citizen of the United States, residing at Belvidere, in the county of Boone and State of Illinois, have invented certain new and useful Improvements in Sewing-Machine Cabinets, of which the following is a specification.

The object of this invention is to construct a sewing-machine cabinet with a platform which is moved bodily downward and rearward by the movement of the cover in order that the sewing-machine head supported by the platform may be lowered beneath the cover when closed and elevated when the cover is opened.

In the accompanying drawings, Figure 1 is a plan view of my improved sewing-machine cabinet. Fig. 2 is a transverse vertical section showing the platform elevated. Fig. 3 is a transverse vertical section showing the platform lowered. Fig. 4 is a lengthwise vertical section on dotted line *a a*, Fig. 1. Fig. 5 is a vertical section on dotted line *b b*, Fig. 1. Fig. 6 is an isometrical representation of one of the supports for the platform.

The cabinet-top 1 has a frame 2 secured to its upper surface. A back 3 and ends 4 and 5 depend from the top. A cover 6 has a hinge connection with the frame 2. To a stationary part of the cabinet are pivoted the two supports for the platform. One of the supports is shown in detail at Fig. 6 and comprises the two side bars 7 and closed end 8. About midway the length of the side bars is secured a block, from which extend perforated ears 9.

To the under face of the platform 12 are secured guide-blocks 10, two for each of the platform-supports. These guide-blocks have a reduced section, which is located between the side bars of the supports. By means of these pivoted supports and the platform supported thereby the platform has a bodily-swinging movement, and by means of the guide-blocks 10, connected to the platform, the platform has a bodily-sliding connection with the supports.

To a stationary part of the cabinet are pivoted two links 11. The other ends of the links have a pivotal connection with the ends of the platform 12. To the end 4 of the cabinet is pivoted a link 13, and to the end 5 is pivoted a link 14. To the link 13 is pivoted a triangular frame at the corner 15. The corner 16 of this frame is located between the ears 9 of one of the supports from the platform 12. One corner, 17, of a similar triangular frame has a pivotal connection with the free end of the link 14, and the corner 18 is located between the ears 9 of the other support for the platform. A rod 19 forms a connection between the corners 20 of the two triangular frames.

To the cabinet is pivoted a sheave 21, and a chain 22 has one end connected to the rod 19 about midway of its length, and its other end is connected to the under face of the cover 6. This chain 22 passes over the sheave 21.

As the sewing-machine head is supported by the platform, its weight will tend to depress or lower the platform. When the parts are in the position shown at Fig. 2, the platform will be held elevated. Upon the closing of the cover the rod 19 will be permitted to drop into the position shown at Fig. 3, which will permit the platform-supports to move on their pivots and swing downward. The links 11, forming a connection between the ends of the platform and the cabinet proper, will cause the platform to slide on its supports and move bodily rearward. Upon the opening of the cover the rod 19 will be raised, which will straigthen the link and triangular-frame connection between the cabinet proper and the platform-supports, thereby raising them, and the links 11 will move the platform bodily forward into its elevated position. The ends of the platform have projections 23, which engage projections 24, extending from the frame 2, thereby limiting the upward movement of the platform. The rod 19 will yield upward sufficiently to permit the platform to be firmly held in its elevated position.

By this arrangement the platform is located near the front of the table-top 1 and a single-piece platform is employed.

I claim as my invention—

1. In a sewing-machine cabinet, the combination of a top, a cover, a platform, platform-supports having a pivotal connection with the

cabinet, the platform having a sliding connection with its supports, links connecting the platform with the cabinet, and a connection between the supports and cover.

2. In a sewing-machine cabinet, the combination of a top, a platform, platform-supports having a pivotal connection with the cabinet, the platform having a sliding connection with the supports, and means for moving the platform-supports and imparting a sliding movement to the platform by the movement of the cover.

3. In a sewing-machine cabinet, the combination of a top, a cover, a platform, platform-supports having a pivotal connection with the cabinet, the platform having a sliding connection with its supports, links connecting the platform with the cabinet, two pairs of double links connecting the platform-supports with the cabinet, and a connection between the double links and the cover.

4. In a sewing-machine cabinet, the combination of a top, a cover, a platform, platform-supports having a pivotal connection with the cabinet, the platform having a sliding connection with its support, links connecting the platform with the cabinet, two pairs of double links connecting the platform-supports with the cabinet, a rod connecting the two pairs of double links and a connection between the rod and cover.

5. In a sewing-machine cabinet, the combination of a top, a cover, a platform, platform-supports having a pivotal connection with the cabinet, the platform having a sliding connection with its support, links connecting the platform with the cabinet, two pairs of double links connecting the platform-supports with the cabinet, an arm extending from one link of each pair, a rod connecting the arms, and a connection between the rod and cover.

WILLIAM J. CRAIG.

Witnesses:
W. S. ADAMS,
A. O. BEHEL.