Feb. 26, 1963 J. S. CARUSO 3,078,526

DISINFECTING APPARATUS FOR SHOES AND THE LIKE

Filed Oct. 11, 1961 2 Sheets-Sheet 1

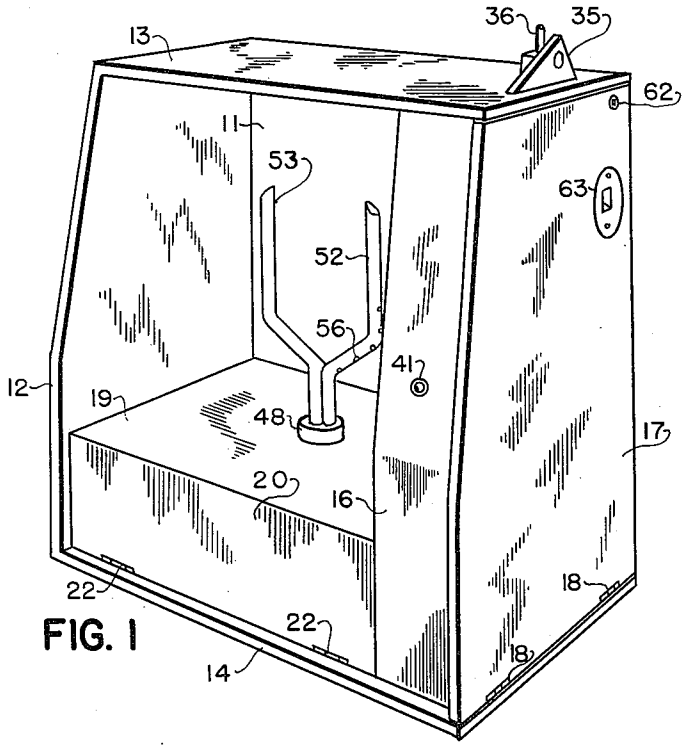

FIG. 1

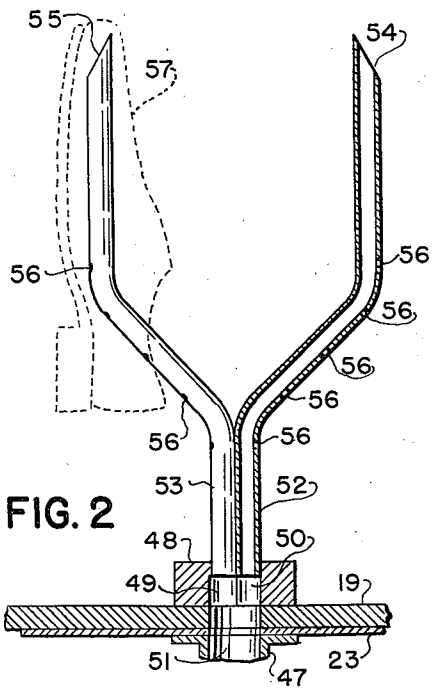

FIG. 2

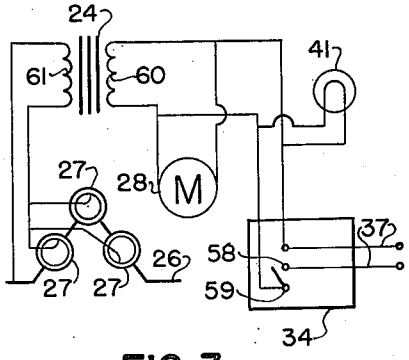

FIG. 3

INVENTOR:
JOHN S. CARUSO

BY Peter M. Boesen

ATTORNEY

Feb. 26, 1963 J. S. CARUSO 3,078,526

DISINFECTING APPARATUS FOR SHOES AND THE LIKE

Filed Oct. 11, 1961 2 Sheets-Sheet 2

FIG. 4

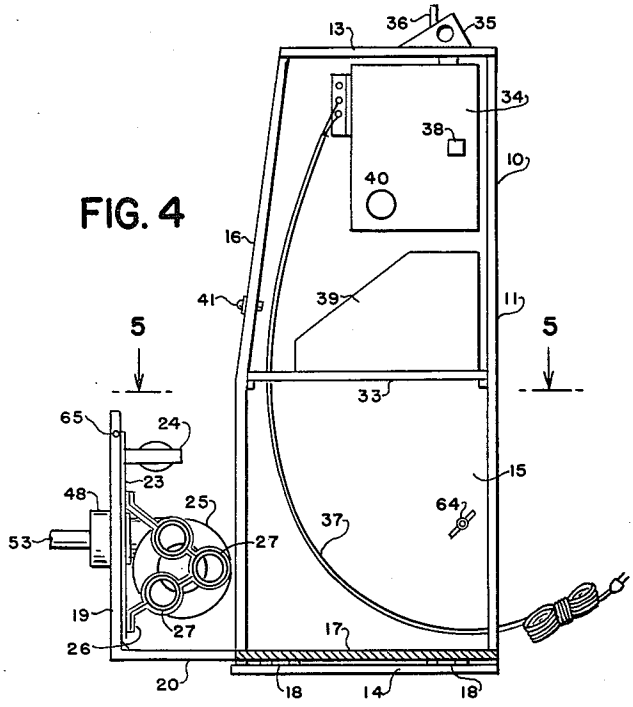

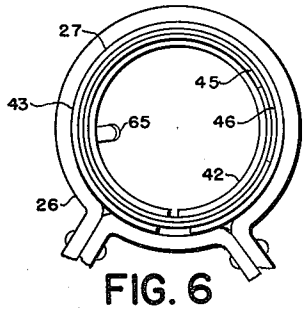

FIG. 6

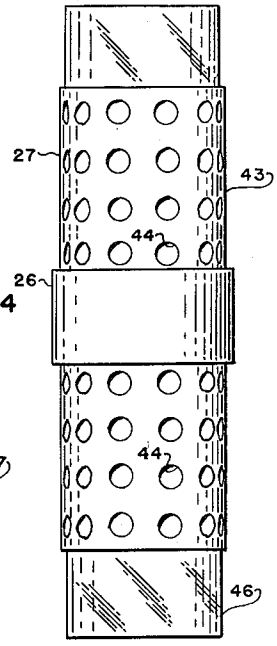

FIG. 7

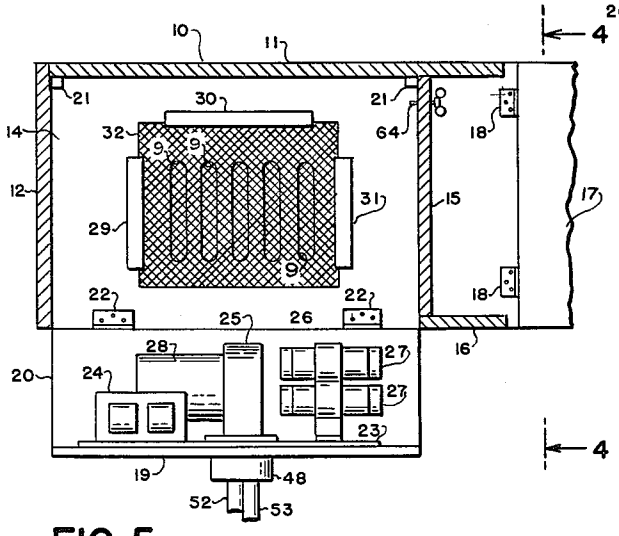

FIG. 5

INVENTOR:
JOHN S. CARUSO
BY Peter M. Boesen
ATTORNEY

United States Patent Office 3,078,526
Patented Feb. 26, 1963

3,078,526

DISINFECTING APPARATUS FOR SHOES AND THE LIKE

John S. Caruso, 35—10 35th St., Astoria, N.Y.

Filed Oct. 11, 1961, Ser. No. 147,398
5 Claims. (Cl. 21—102)

This invention relates in general to disinfecting or sterilizing apparatus and, more particularly, to disinfecting apparatus utilizing ozone produced from the air.

In bowling alleys bowling shoes are rented to patrons. In a like manner, shoe skates may be rented in ice and roller skating rinks. In these situations there is always a strong possibility, despite the use of powdered disinfectants and other precautions taken by the managements, that athlete's foot and other infectious diseases may be transferred on the rented shoes. It is, therefore, a main object of this invention to provide a device which will simply, rapidly and efficiently disinfect or sterilize such rented shoes.

Another object of this invention is to provide disinfecting apparatus which may be used to efficiently disinfect a wide variety of sizes and shapes of shoes.

A further object of this invention is to provide a disinfecting apparatus for shoes which may be easily, effectively, and simply operated by patrons to disinfect rented shoes.

Still another object of this invention is to provide coin operated disinfecting apparatus for shoes which will function unattended for a long period of time without failure.

Yet another object of this invention is to provide coin operated disinfecting apparatus for shoes containing ozone generating apparatus which is more safely constructed to prevent users or coin collectors from receiving electric shocks from the high voltage elements from the ozone generating apparatus.

Still another object of this invention is to provide a disinfecting apparatus for shoes using ozone which is easily and safely maintained and serviced.

Additional objects, advantages, and features of invention reside in the particular construction, arrangement, and combination of parts involved in the embodiment of the invention and its practice as will be understood from the following description and accompanying drawing wherein:

FIGURE 1 is a perspective view of my invention;

FIGURE 2 is a vertical section through a fragment of the floor plate with one aerating shoe support shown in section and with the other aerating shoe support having a shoe drawn in dotted lines disposed on it;

FIGURE 3 is a wiring diagram for my invention;

FIGURE 4 is a side view of the shoe disinfecting apparatus with the wiring removed except for the main connection to a current source, with the side door open and broken away in section, with the floor plate assembly in the open position for servicing, and with the aerating shoe supports partly broken away;

FIGURE 5 is a horizontal section taken on line 5—5 of FIGURE 4 showing the shoe disinfecting apparatus with all wiring removed;

FIGURE 6 is an end view of an ionizing unit clamped in a fragment of a support bracket; and

FIGURE 7 is a longitudinal side view of the ionizing unit shown in FIGURE 6.

Referring to the drawing in detail, FIGURES 1, 4 and 5 show the cabinet 10 of my invention which is best made of wood and which has a back wall 11, a side wall 12, a top wall 13 and a bottom wall 14. A second side wall 15 is disposed parallel to side wall 12 a short distance from the ends of the back wall 11, the top wall 13 and the bottom wall 14. A small or narrow front wall 16 extends in

front of the second side wall 15 towards the end of the cabinet 10.

A side door 17 is pivotally attached to the bottom wall 14 by means of the hinges 18. As shown in FIGURE 1, when the side door 17 is closed, it covers the end of cabinet 10. As is further shown in FIGURE 1, the upper and forwardly disposed portions of the side wall 12, the side door 17 and the small front wall 16 may slope backwards to a slight extent to render the cabinet 10 more aesthetically pleasing.

As shown in FIGURES 4 and 5, a floor plate 19 has a front plate 20 extended downward from its front edge. The front plate 20 is hinged to bottom wall 14 by means of the hinges 22 so that the front plate 20 and the floor plate 19 may be pivoted into the cabinet in the position shown in FIGURE 1. When the floor plate 19 is pivoted into the cabinet, its rear corners rest upon the support blocks 21 which are shown in FIGURE 5. When the floor plate is within the cabinet 10, the floor plate 19 and the front plate 20 extend with a very small clearance between the side wall 12 and the second side wall 15 and the rearmost edge of floor plate 19 butts against the back wall 11 so that back wall 11, side wall 12, second side wall 15, front plate 20 and floor plate 19 form a substantially airtight compartment.

Referring again to FIGURES 4 and 5, a ground plate 23 is fixed to the underside of floor plate 19. Fixed to the ground plate 23 are the transformer 24, the blower 25 and the bracket 26 supporting the ionizing units 27. The blower 25 has a motor 28 mounted directly on it.

As shown in FIGURE 5, a number of elongated apertures 9 are formed in the bottom wall 14. Three brackets 29, 30 and 31 secure a piece of screen filter material 32 over the apertures 9. The brackets 29, 30 and 31 are so arranged that the piece of screen material 32 may easily be removed to be cleaned or replaced.

As shown in FIGURE 4, a narrow shelf 33 extends across cabinet 10 beyond the second side wall 15. Secured to the second side wall 15 directly beneath top wall 13 is a standard coin operated time switch mechanism 34. This mechanism 34 has disposed above it a coin receiving member 35 and a coin return plunger 36. When a coin is dropped into the coin receiving member 35, a switch within unit 34 is closed for a pre-set interval of time which, in the case of this invention, may be about three minutes. An electric cord 37 is connected to terminals on unit 34 and may be plugged into a suitable electric current source. Rejected or returned coins pass from unit 34 through the opening 38. Resting on the shelf 33 directly below unit 34 is a cash box 39 into which coins fall after activating unit 34. Unit 34 may also contain a counter 40 which indicates the number of times unit 34 has been activated and the number of coins which should have passed through it into cash box 39. A small indicator light 41 projects through front wall 16.

As is further shown in FIGURE 4, the three ionizing units 27 are held by bracket 26 directly in front of the intake of blower 25. Referring to FIGURES 6 and 7, the ionizing units each comprise an inner cylindrical electrode 42 and an outer cylindrical electrode 43. These electrodes are preferably made of a material, such as aluminum, which is capable of resisting the action of ion. The electrodes 42 and 43 may contain perforations 44 which serve to dissipate heat generated within each unit 27. Inner electrode 42 has fixed to it an inward projecting terminal 65 which is connected to a high voltage transformer. Extending between and beyond the electrodes 42 and 43 are the dielectric support members 45 and 46. In this embodiment of the invention, the dielectric support members 45 and 46 are preferably wound from approximately one to one and one-half turns of .002 inch thick mica sheet wound approximately one inch in diameter. The

electrodes are approximately 3½ inches long. The mica sheet dielectric supports 45 and 46 provide an advantage over the conventional glass supports in that they are less fragile and likely to break.

Extending directly above the mounting flange 47 of the blower 25 is a wooden boss 48. As shown in FIGURE 2, the throat of mounting flange 47 communicates with an aperture 52 in ground plate 23 and floor plate 19. Two apertures 49 and 50 are disposed side by side in boss 48 to communicate with aperture 51 and have the aerating shoe supports 52 and 53 mounted in them. The aerating shoe supports 52 and 53 are formed of tubular material and extend directly upwards for a short distance above boss 48 until they diverge at an angle and then extend vertically upward to terminate in the outwardly disposed bevels 54 and 55. A number of spaced apertures 56 are formed in the outwardly disposed surfaces of the diverging portions of the aerating shoe supports.

This invention operates and is used in the following manner. Shoes to be disinfected are placed upon the aerating shoe supports 52 and 53 as is the shoe 57 shown in FIGURE 2. It is to be noted that the beveled ends 54 and 55 of the aerating shoe supports 52 and 53 terminate a sufficient distance from the top wall 13 of cabinet 10 so that each shoe may be easily placed into position as shown. When a coin is placed in the coin receiving member 35, it travels downward to activate the coin operated time switch 34. The coin activated time switch 34 then closes a contact for approximately 3 minutes between terminal 58 and terminal 59 as shown in FIGURE 3. Thus power from a suitable outside current source may flow through the electric cord 37 to the primary coils 60 of transformer 24, to blower motor 28, and to the indicator light 41. Thus indicator light 41 lights to show that the apparatus is functioning.

The secondary coils 61 of transformer 24 are connected to the bracket 26 which contacts all the outer ionizing electrodes 43 of the ionizing units 27. Another lead from the secondary coils 61 of transformer 24 is connected to the inner electrode 42 of each unit 27 by means of the terminals 65. In one embodiment of this invention, it was found that a 3,000 volt transformer rated at 18 ma. produced sufficient ion using three ionizing units 27. As the units 27 produce ion, the blower 25 draws air from within the space below the floor plate 19 and expels this air through the aerating shoe supports 52 and 53. Since the ionizing units 27 are disposed in front of the air intake of blower 25, the air expelled through the aerating show supports 52 and 53 is drawn about and through the units 27 to become richly laden with ozone.

The bulk of this ozone laden air is discharged through the beveled ends 54 and 55 of the shoe supports 52 and 53 to pass backwards from the toe of the shoe destroying germs and bacteria. As shoes of many sizes may need to be disinfected on this apparatus, the apertures 56 are so placed that, regardless of the size of the shoe 57, they will direct a blast of ozone laden air towards the heel and back portion of each shoe. After approximately 3 minutes of operation, the coin operated time switch 34 will disconnect terminals 58 and 59 as shown in FIGURE 3 to shut off motor 28, transformer 24 and indicating light 41. When the indicating light 41 goes out, the user of this apparatus knows that his shoes are thoroughly disinfected and sterilized. In one laboratory test carried out in controlled conditions, prepared cultures of particular pathogenic dermatophytes were exposed to ozone generated by this apparatus for periods up to three minutes. Except for the controls, none of the cultures showed any growth if they were exposed up to 3 minutes to ozone from this apparatus.

At certain regular intervals of time, a coin collector will open side door 17 by inserting a key in lock 62 as shown in FIGURE 1. The serviceman at this time need only empty the cash box 39 of its coins and reclose the side door 17. It is to be noted that a coin return slot 63 in side door 17 communicates with the opening 38 in unit 34 so that a coin passing from unit 34 slides through slot 63 and may be retrieved by a user.

As shown in FIGURE 4, the floor plate 19 is secured within cabinet 10 by means of a thumb screw 64 which extends through the second side wall 15 to engage an aperture 65 in the side of the floor plate 19. Thus a serviceman may periodically remove the cash box 39 by opening side door 17 without ever coming in contact with the dangerous high voltages generated by transformer 24.

After a year or more of continuous operation, the electrodes 42 and 43 of the ionizing units 27 may become corroded or covered with dust, lint or the like which is drawn through and about the ionizing units 27 by blower 25. While screen filter 32 enables the units 27 to function for over a year without becoming dust clogged, eventually the units 27 will have to be replaced or cleaned. At such time, a qualified serviceman need only remove the thumb screw 64 and then swing the floor plate 19 and front plate 20 forward as shown in FIGURE 4 to service the units 27. Thus this shoe disinfecting apparatus is particularly safe as neither users or coin collectors can come into contact with the dangerous higher voltages employed in the units 27.

The illustrated embodiment of the invention is designed to be mounted on a wall. This enables the horizontally disposed screen filter 32 to function more efficiently as heavier dust particles are less likely to be drawn upward through the apertures 9 in bottom wall 14 of the cabinet. The cabinet 10 itself serves a function in that it permits a large accumulation of ozone to pass into and remain within the shoes being disinfected. If the shoes being disinfected were not shielded from strong direct breezes, high ozone concentrations, especially in the heel portions of shoes, could be dissipated.

While I have disclosed my invention in the best form known to me, it will nevertheless be understood that this is purely exemplary and that modifications may be made without departing from the spirit of the invention except as it may be more limited in the appended claims wherein I claim:

1. In an apparatus for disinfecting shoes, a first side wall, a second side wall parallel to said first side wall, a back wall, a top wall and a bottom wall, said back, top and bottom walls extending between said side walls, a front plate hinged to said bottom wall, a floor plate extending backward from the upper edge of said front plate, said front plate and said floor plate extending with slight clearance between said side walls, said front plate, said side walls, said floor plate, said rear wall and said bottom wall forming a substantially air tight compartment containing at least one aperture, a filter disposed over the aperture in said compartment, at least one ionizing unit within said compartment, a transformer within said compartment connected to said ionizing unit, a blower within said compartment fixed to draw air from about said ionizing unit, a motor driving said blower, two tubular aerating shoe supports fixed to said floor plate extending upward from said floor plate beneath said top wall and between said side walls, a time switch disposed beyond said second side wall connected to said blower motor and said transformer and activating said motor and blower to draw air into said compartment through the aperture in said compartment past said ionizing units and out said aerating shoe supports, said tubular aerating shoe supports having open upper ends over which shoes may be placed with the toe portions of the shoes over the open upper ends which direct ionized air into the toe portions of the shoes.

2. The combination according to claim 1 in which said tubular aerating shoe supports have lower portions extending vertically upward adjacent to each other from said floor plate, intermediate portions diverging laterally upward, and vertical upper portions having outwardly facing beveled ends, at least said intermediate portions containing outwardly facing spaced apertures directing some ionized air into the heel portions of the shoes.

3. The combination according to claim 2 wherein said back wall, said top wall and said bottom wall extend between said side walls and beyond said second side wall, and with the addition of a small front wall extending between said bottom wall and said top wall along the front edge of said second side wall and beyond said second side wall, and with the addition of a side door attached beyond said second side wall and extending between said top wall and said bottom wall and said small front wall and said back wall, said coin operated time switch being disposed behind said side door.

4. The combination according to claim 3 in which said blower, said transformer and said ionizing units are fixed to and suspended below said floor plate.

5. An apparatus for disinfecting shoes comprising, in combination, a first side wall, a second side wall parallel to said first side wall, a back wall, a top wall and a bottom wall, said back, top and bottom walls extending between said side walls and beyond said second side wall, a front plate hinged to said bottom wall, a floor plate extending backward from the upper edge of said front plate and containing a central aperture, said front plate and said floor plate extending with slight clearance between said side walls, said front plate, said side walls, said floor plate, said rear wall and said bottom wall forming a substantially air tight compartment, said bottom wall containing apertures communicating with said compartment, a filter disposed over the apertures in said bottom wall, ionizing units within said compartment fixed to and suspended from said floor plate, said transformer being connected to said ionizing units, a blower within said compartment fixed beneath the central aperture in said floor plate and drawing air through and about said ionizing units, a motor driving said blower, two tubular aerating shoe supports fixed to said floor plate above the central aperture in said floor plate, said shoe supports having lower portions extending vertically upward adjacent to each other, intermediate portions diverging laterally from each other, and upper portions extending vertically upward, said upper portions of said shoe supports terminating in outwardly disposed beveled open ends over which shoes may be placed with the toe portions of the shoes supported by the open beveled ends which direct ionized air into the toe portions of the shoes, said shoe supports having at least said intermediate portions containing spaced outwardly facing apertures directing some ionized air into the heel portions of the shoes, said shoe supports being beneath said top wall and between said side walls, a small front wall extending between said bottom wall and said top wall along the front edge of said second side wall and extending beyond said second side wall, a side door pivotally secured between said top wall and said bottom wall and said small front wall and said back wall beyond said second side wall, a coin operated time switch disposed beyond said second side wall behind said side door, and locking means extending through said second side wall locking said floor plate in position between said side walls, said time switch being connected to said blower motor and said transformer and activating said motor driving said blower and drawing air through the apertures in said bottom wall into said compartment past said ionizing units, and blowing air out through said aerating shoe supports.

References Cited in the file of this patent

UNITED STATES PATENTS

2,977,647 Vassiliades ---------- Apr. 4, 1961