Dec. 24, 1935. S. E. LEONARD, JR 2,025,461

ELECTRICAL DISCHARGE DEVICE

Filed June 26, 1933

FIG. 1

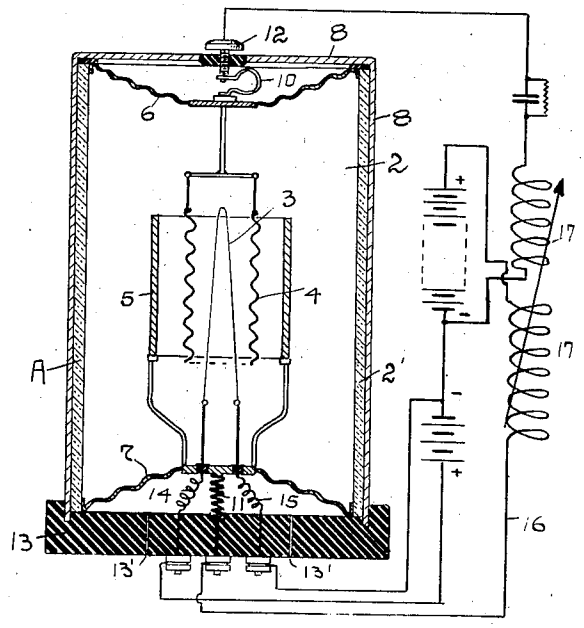

FIG. 2

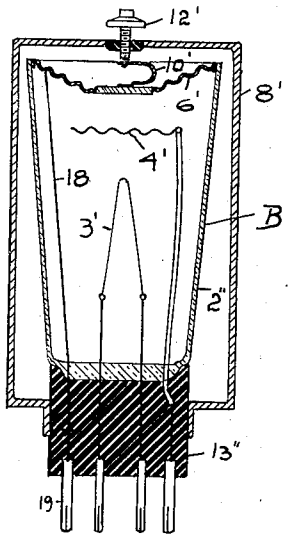

FIG. 3

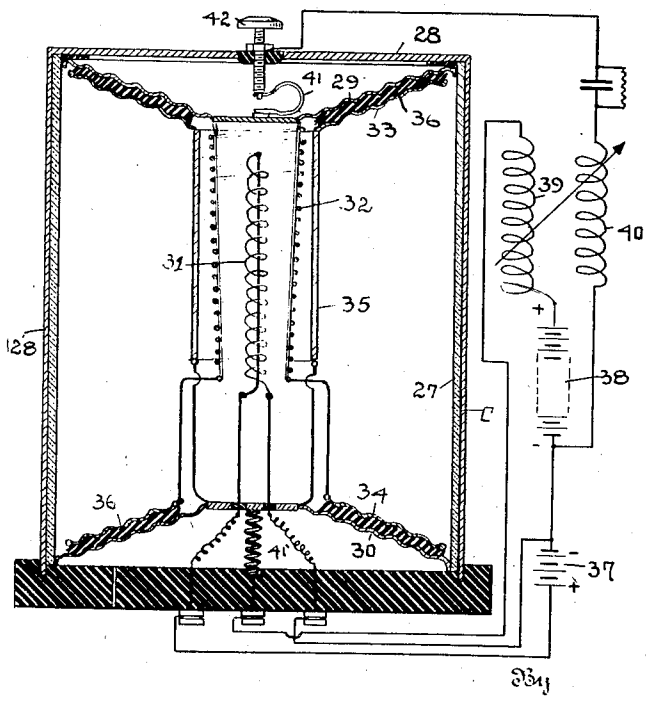

FIG. 4

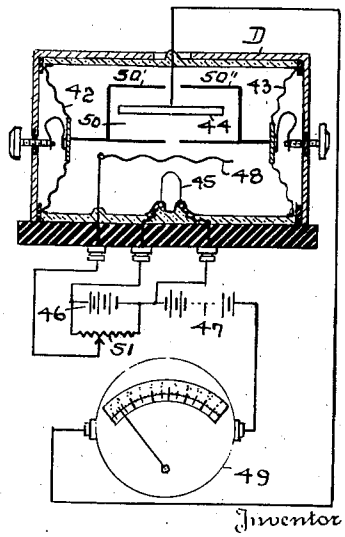

Inventor

Samuel E. Leonard, Jr

By Fisher, Moser & Moore

Attorneys

UNITED STATES PATENT OFFICE

2,025,461

ELECTRICAL DISCHARGE DEVICE

Samuel E. Leonard, Jr., East Cleveland, Ohio

Application June 26, 1933, Serial No. 677,752

4 Claims. (Cl. 250—27.5)

The present invention relates to electrical discharge devices for the control of power and more particularly to vacuum tubes designed for this purpose. While my proposed tube is of general application in electric circuits for many different purposes such as remote control of devices by pressure variations, heat variations etc. it is particularly adapted for use in radio receiving and sending stations. Electrical discharge devices or vacuum tubes usually consist of an evacuated container within which is disposed a system of cooperating electrodes generally comprising a cathode, an anode, and a control electrode or grid, although for particular purposes a plurality of each or any of such electrodes may be employed. Heretofore considerable difficulty has been experienced by manufactures of vacuum tubes in holding the interelectrode capacity of the general run of tubes within the desired limits so that the highly desirable exact and sharp tuning of oscillatory circuits embodying these devices could be had. At present manufacturers and radio engineers overcome these difficulties by using so called matched tubes in radio receiving sets and by adjusting the circuits in sending stations. This procedure is of course very costly and can only be practiced for more expensive receiving sets or sending stations.

The general object of the present invention is to overcome the foregoing objections by providing electrical discharge devices or vacuum tubes with means adapted to change the physical relationship of the electrodes without destroying the vacuum in the tubes. As any change in the geometry of a tube of course causes a corresponding change of interelectrode capacity it is therefore possible to procure the desired capacity adjustment by providing means for altering the physical relationship or geometry of the electrodes. This is obtained according to the present invention by making a part of the wall of the evacuated tube or container yieldable, for example by inserting a metal window in the container, and fastening one of the electrodes of the tube, to and for movement with said yieldable wall portion or window, means also being provided for shifting the central portion of the yieldable wall with respect to the rigidly supported electrodes of the tube.

Where a tube having an exceptionally wide range of interelectrode capacity change is desirable, the tube or evacuated container is preferably provided with a plurality of yieldable wall portions operatively connected with a corresponding number of electrodes movable with respect to the body of the tube structure, or a single flexible window may be operatively connected to more than one movable electrode.

A tube may be readily constructed within the scope of my invention, which is susceptible to interelectrode capacity changes in accordance with atmospheric pressure variations and wind pressures or it may readily be so constructed that changes in its geometry will be caused by temperature variations, and thus can be used effectively in apparatus for automatically recording barometric and temperature conditions.

The invention itself, both as to its organization, method of operation and practical use together with further objects and advantages will best be understood by reference to the following description taken in connection with the accompanying drawing in which:

Figure 1 is a diagrammatical view of a vacuum tube embodying the invention;

Figure 2 is a diagrammatic view of a tube embodying the conventional glass blank with a flexible or yielding metal top portion forming the plate of the tube;

Figure 3 is a cross section through a vacuum tube having a plurality of flexible or yielding wall portions, the tube being specifically designed to react to atmospheric pressure variations;

Figure 4 is a cross section through a modified form of vacum tube for effecting frequency changes in oscillating circuits by atmospheric pressure variations, the tube being coupled to a circuit including an electrically operated calibrated altimeter or barometer to permit direct reading of the atmospheric pressure.

Referring more particularly to the drawing, the vacuum tube A, diagrammatically shown in Figure 1 embodies an evacuated chamber or container 2, the cylindrical body 2′ of which is of rigid material such as glass and having an open upper end and a base 13 of high electrical resistance, opening to the atmosphere through openings 13′. Enclosed within the container 2 are three separate insulated elements or electrodes, comprising the filament or cathode 3, the grid 4 and the anode 5, common to conventional vacuum tubes, now in general use. The upper and lower ends of the tube A are provided with air tight closure members in the form of flexible diaphragms 6 and 7 respectively, preferably formed of metal, the diaphragm 7 of course being positioned above the perforated base 13. Grid 4 is connected to diaphragm 6 for movement therewith, and anode 5 and filament 3 are connected to lower diaphragm 7 for joint movement with the latter. A pair of

expansion springs 10 and 11 are respectively connected at their inner ends to the outer faces of the diaphragms, centrally thereof. The outer end of spring 10 is connected to adjusting screw 12 mounted on a frame member or cross piece 8 and the outer end of spring 11 is connected to the base 13. These springs hold the diaphragms under tension and when screw 12 is rotated the central area of the diaphragms will be forced inwardly or outwardly according to the direction in which the adjusting screw is rotated. This movement of the diaphragms is communicated to and causes a change in the physical relationship of the electrodes and therewith a change in the interelectrode capacity of tube A.

In operation filament 3 of tube A, when connected with an external source of current, through coiled or loose wires 14 and 15 emits a flow of electrons, the rate of which depends upon the interelectrode capacity of the tube. Consequently the rate of electron discharge or flow can readily be increased or decreased by appropriate adjustment or movement of the diaphragm. Outward movement of grid 4 with respect to the filament 3 and anode 5 increases the flow of electrons and decreases the interelectrode capacity of the tube whereas a reverse movement increases the capacity of the tube. It will thus be seen that tube A, when connected to the external circuit 16 including the inductance 17 may be conveniently employed to manually change the natural frequency of circuit 16. Such change in the frequency of circuit 16 will also be effected automatically, where the diaphragms are subjected to various barometric, weather and heat conditions, the diaphragms 6 and 7 for some purposes being preferably made of thermal metal. Any change in the physical relationship between the electrodes of tube A effects the following capacities: (1) the capacity between grid 4 and anode 5; (2) the capacity between grid 4 and filament 3; and (3) the capacity between filament 3 and anode 5. It will also of course be understood that any change in the capacity of tube A results in a corresponding change in the resistance between the filament grid and plate.

Due to the fact that the changes in the interelectrode capacity of tube A take place within the evacuated container or chamber 2, the likelihood of other and undesirable changes occuring is minimized. Consequently after the tube has once been manually adjusted to the desired interelectrode capacity further manipulation of screw 12 will be unnecessary. As any capacity change in an oscillating circuit always causes a change in the natural frequency period of said circuit the tube may be used for adjusting or regulating the frequencies of a circuit, oscillating in radio or audio frequencies. The present invention, therefore affords a most convenient and inexpensive means for adjusting improperly designed circuits, and also facilitates testing and tuning during the assembly of radio receiving and sending stations.

The tube B diagrammatically shown in Figure 2, discloses a modified form of the invention which is of extremely practical and somewhat simplified construction adapted to be used in radio receiving sets. This form of tube comprisises a conventional glass body portion 2'' closed at its lower end by the customary socket 13'', the top of the body 2'' being tightly sealed by means of a flexible copper diaphragm 6' which constitutes the plate of the tube. Mounted on the socket is a filament 3' and a grid 4'. A wire 18 between the diaphragm and the socket electrically connects the base or socket contact 19 with the plate or diaphragm. Frame 8' reinforces or protects the tube and serves as a support for an adjusting screw 12' to which the upper arm of U shaped expansion spring 10' is connected, the lower arm of the spring being connected with the diaphragm, thus permitting the tension of the latter to be manually adjusted with corresponding change in tube geometry.

Where the use of the tube is such that the changes in interelectrode capacity will be automatically effected, for example when the changes are caused by variations of atmospheric pressure, temperature variations etc. the modified form of tube C disclosed in Figure 3 is preferred. While the working principle of this tube is identical with the principles previously described, the electrodes are more closely related to each other so that substantial changes in the interelectrode capacity of the tube will be caused by relatively slight pressure, temperature or other variations as the case may be. Tube C comprises a tubular glass body 27 protected and supported by a frame 28 of suitable material. The opposite ends of body 27 are tightly closed with vacuum-tight seal by means of upper and lower outer diaphragms 29 and 30 respectively. The filament or cathode 31 and the anode 35 are of conventional form and the grid 32 is preferably in the form of a spiral to permit free flow of electrons therethrough. A pair of upper and lower inner flexible diaphragmns 33 and 34 are spaced from the outer diaphragms 29 and 30 previously referred to. The grid 32 is connected, physically and electrically directly to outer upper diaphragm 29 and lower inner diaphragm 34, and plate 35 is physically and electrically connected to lower outer diaphragm 30 and an upper inner diaphragm 33. Mica or other dielectric separating disks 36 are used to electrically insulate the grid and plate and their respective diaphragms. In the structure described substantial interelectrode capacity variations are caused by relatively slight movements of the diaphragms with respect to each other, maximum capacity changes occurring between grid 32 and anode 35. The filament 31 is heated by a low voltage battery 37.

An oscillating circuit including a plate battery 38, a plate coil 39 for anode 35, which is electrically and physically connected to diaphragms 30 and 33 and a grid coil 40 for grid 32 which is electrically and physically connected to diaphragms 29 and 34. The frequency of the oscillating circuit depends on the ratio of inductances or coils 39 and 40 and the interelectrode capacity of tube C. This frequency will be affected or altered by the outside physical influence on said tube, the limits of variation of said frequency depending entirely on the design of the tube and the tension of expansion springs 41 and 41', the tension of the former being manually adjustable by means of a screw member 42 threadedly supported in the frame 28 of tube C. Springs 41 and 41' may be utilized as variable capacities for the tube if so desired.

The described change in the geometry of the tube, which takes place without destroying its vacuum properties, as previously brought out, causes changes in the interelectrode capacity, the internal resistance of the tube and the resistances between the electrodes, and permits control or valuing of the electron flow in the tube and thereby a change of currents in various elemental circuits. This change in the flow of current may be utilized to visibly indicate air pres-

sure variations by measuring the anode current of the tube in terms of air pressure or altitude, as illustrated in the modified form of my invention shown in Figure 4, wherein the tube D is provided with yieldable wall portions or diaphragms 42, 43 physically and electrically connected with and supporting opposed halves 50', 50'' of a screen member 50 for the anode 44. The filament 45 is heated by battery 46, a second battery 47 being employed to send the desired amount of current through the tube. Grid 48 is charged with the desired voltage from battery 46, a potentiometer 51 being employed for that purpose. The anode current flows through a meter 49 which is calibrated to indicate air pressures or altitudes. Variations in air pressure actuates the diaphragms and causes a change in tube geometry which is directly indicated on calibrated meter 49 in pressure or altitudes, as the meter indicates the flow of electrons through the tube.

It will of course be understood that the inter-electrode capacity of vacuum tubes such as described and shown herein will be affected by temperature or other heat variations, particularly if the diaphragms are made of highly sensitive thermal metal, and that these variations can be registered in a manner similar to the air pressure variations referred to above.

Having thus described my invention, what I claim is:

1. A vacuum tube, comprising a rigid evacuated vessel having two oppositely mounted yielding wall portions, a cathode within said vessel, a grid and an anode within said vessel directly physically connected with said yieldable wall portions and pressure means to cause a yielding buckling action of said wall portions into said vessel for changing the physical relationship of said cathode grid and anode with respect to each other and the natural frequency of the vacuum tube.

2. A vacuum tube, comprising an evacuated vessel having oppositely mounted yielding wall portions, a plurality of electrodes in said vessel including a grid and an anode, means supporting said plate and grid from said wall portions and yielding pressure means for causing said wall portions to yield to buckle into said vessel and to change the physical relationship of said anode and grid with respect to each other.

3. A vacuum tube comprising a rigid evacuated vessel having two oppositely mounted yieldable metal wall portions of substantial area, two centrally perforated metal diaphragms within said vessel adjacent to said metal wall portions in slightly spaced relation with respect thereto, a plurality of electrodes in said vessel including a grid and an anode, said grid being connected to one of said metal wall portions and to the perforated diaphragm mounted opposite the other one of said metal wall portions and said anode being connected to the other one of said metal wall portions and to the perforated diaphragm mounted opposite the first one of said metal wall portions and independent means for buckling said yieldable wall portions and effecting changes in the physical relationship of said grid and anode and the natural frequency of said tube.

4. A vacuum tube according to claim 3 wherein said metal wall portions and perforated diaphragms mounted in slightly spaced relation with respect to each other are prevented from electrical contact with each other by a layer of a dielectric medium interposed between said wall portions and perforated diaphragms.

SAMUEL E. LEONARD, JR.