April 30, 1968 P. J. DOCIMO 3,381,123

LIGHTING FIXTURE

Filed July 5, 1966

FIG. 1.

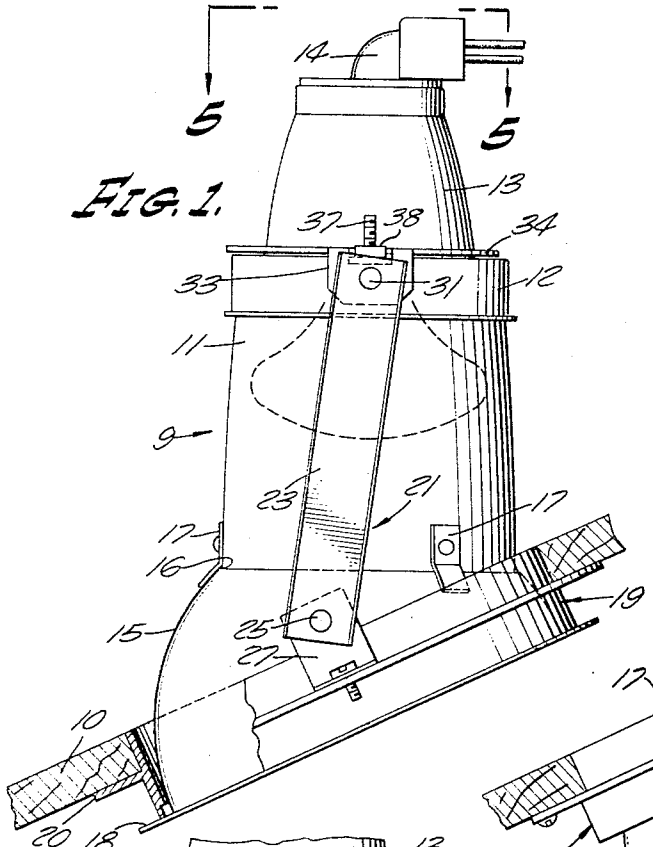

FIG. 4.



FIG. 3.

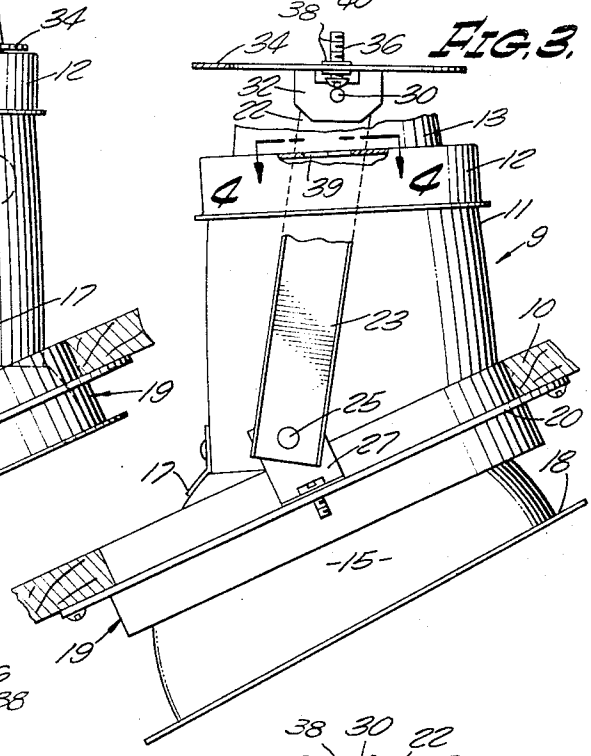

FIG. 2.

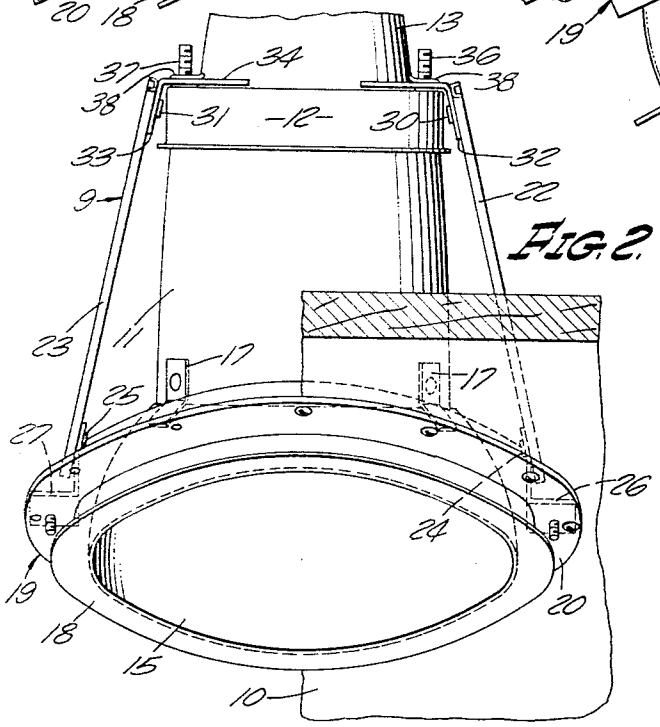

FIG. 5.

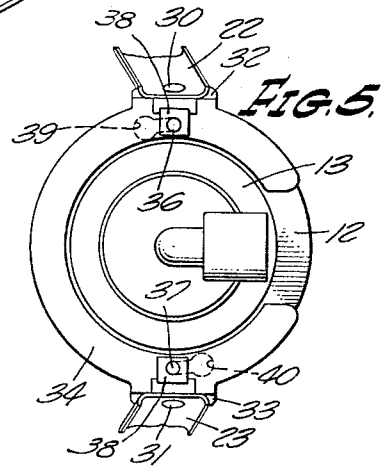

INVENTOR.
PETER J. DOCIMO
BY Lyon & Lyon
ATTORNEYS

United States Patent Office 3,381,123 Patented Apr. 30, 1968

3,381,123

LIGHTING FIXTURE

Peter J. Docimo, Los Angeles, Calif., assignor to Marvin Electric Manufacturing Co., Los Angeles, Calif., a corporation of California

Filed July 5, 1966, Ser. No. 562,645
7 Claims. (Cl. 240—78)

ABSTRACT OF THE DISCLOSURE

A lighting fixture for an inclined surface in which an opening is formed in a hemispherical member which falls in a plane which intersects the plane of the base of the member at substantially the angle of incline of the inclined surface. The hemispherical member is attached to a housing and this assembly coupled to a plaster frame by pivotally mounted struts and a collar which cause the housing to be vertically aligned when the base of the hemispherical member is parallel with the inclined surface.

This invention relates to a lighting fixture and more particularly to a recessed lighting fixture for use in a sloping or inclined surface.

The use of recessed lighting fixtures in industrial and commercial establishments is widespread and many different types of fixtures are available for this purpose. For example, fixtures for holding a spot or floodlamp for illuminating selected areas, for example, entertainment areas in restaurants or the like are readily available. Such fixtures customarily comprise an elongated, generally cylindrical housing in which the lamp is positioned and a plaster frame which is attached to the ceiling and to which the housing itself is attached. While such fixtures are satisfactory in the ordinary installation, they have not been found satisfactory where the surface or ceiling in which they are to be mounted is inclined or sloping. Since it is usually desired that the illumination from the lamp be directed straight downwardly even when the ceiling is inclined, some alteration of the conventional fixture has been required.

Typically, this alteration has been made by cutting the cylindrical housing at an angle equal to the angle of incline of the surface or other ceiling. This solution, however, is not entirely satisfactory as it leaves the housing without an outwardly extending flange for covering the plaster or other ceiling material surrounding the fixture, and thus does not have a particularly pleasant appearance from the aesthetic standpoint. Since each housing so cut terminates in a different conic section, it is not practical to provide a flange that can be easily attached to overcome this disadvantage.

It is therefore an object of the present invention to provide a recessed lighting fixture that may easily and conveniently be installed in a sloping or inclined surface.

It is another object of the present invention to provide such a lighting fixture that is provided with a flange that covers the plaster or other material surrounding the fixture and lies substantially flush therewith.

These and other objects and advantages of the present invention will become more apparent upon reference to the accompanying description and drawings in which:

FIGURE 1 is a side elevation of the light fixture of the present invention;

FIGURE 2 is a front elevation of the lighting fixture of the present invention;

FIGURE 3 is a side elevation, partly in cross section, of the lighting fixture of the present invention during an intermediate stage in its installation;

FIGURE 4 is a sectional detail taken along lines 4—4 of FIGURE 3; and

FIGURE 5 is a top plan view of the lighting fixture of the present invention, taken along lines 5—5 of FIGURE 1.

Turning now to the several figures, a lighting fixture 9 is shown installed in an inclined surface or ceiling 10. The lighting fixture 9 includes an elongated tubular housing 11 which may be in the form of a right cylinder, frustum, or any other desired shape whose lower end is circular in configuration. The upper end of the housing 11 is provided with a cap 12 which can be spot welded, riveted or otherwise attached to the housing 11. The cap 12 is provided with a dome portion 13 which is detachably connected to an outlet box 14 which contains a socket for receiving a floodlamp or the like, shown in phantom in FIGURE 1. The outer surface of the dome portion 13 is provided with a taper for a purpose to be explained hereinafter.

To the lower end of the housing 11 there is attached a hemispherical member 15 having an opening 16 formed therein by the removal of a spherical segment. The opening 16 has a diameter substantially equal to the diameter of the open lower end of the housing 11 and is positioned over and aligned with this lower end so that the lamp is freely accessible. The hemispherical member 15 can be attached to the housing 11 in any suitable manner. As shown, a series of brackets 17 are used for this purpose, the upper portion of each of the brackets 17 being riveted to the housing 11 and the lower portion being spot welded to the hemispherical member 15. The base of the hemispherical member 15 is preferably provided with an outwardly extending flange 18 which lies substantially flush with the plaster or other surfacing material and provides a shield over the generally irregular area where this material approaches the lighting fixture.

As can be understood, any number of spherical segments may be removed from the hemispherical member 15 to leave an opening in the member so that each of the openings thus formed will have the same diameter. The plane of each such opening, however, will intersect the plane of the base of the hemisphere at a different angle. By choosing this angle to be equal to the angle of incline of the surface or ceiling in which the fixture is to be mounted, the fixture can be adapted to be mounted in surfaces inclined over a wide range of angles. Since each opening left by removing a spherical segment is circular and has the same diameter, the hemispherical member 15 can always simply be mounted to the housing 11 by means of the brackets 17 with the plane of the opening in the hemispherical member 15 parallel to the plane of the open end of the housing 11. Such attachment will leave the housing 11 perpendicular to the floor so that the illumination from the lamp 14 will be directed downwardly and will leave the flange 18 of the member 15 parallel with the inclined surface. It can thus be seen that a single lamp fixture can be quickly adapted to be mounted in a wide variety of surfaces by simply determining the angle of incline of the surface and cutting the hemispherical member 15 accordingly.

The lighting fixture 9 also includes a plaster frame 19 having a peripheral flange 20 and associated mounting framework, indicated generally at 21. The mounting framework includes a pair of struts 22 and 23 which have their lower ends pivotally mounted on pins 24 and 25 respectively. The pins 24 and 25 are supported in the upstanding legs of L-shaped brackets 26 and 27, the horizontal portions of which are screwed or otherwise attached to the peripheral flange 21 of the plaster frame 20.

The upper ends of the struts 22 and 23 are pivotally mounted on pins 30 and 31 which are supported in depending ears 32 and 33 of a collar 34. The collar 34 has an internal diameter slightly greater than the greatest external diameter of the dome portion 13. The collar 34 is

also provided with a pair of screws 36 and 37, which are held in place by locknuts 38. The screws 36 and 37 are adapted to cooperate with key-shaped slots 39 and 40 formed in the horizontal surface of the cap 12 adjacent dome portion 13.

When the lighting fixture of the present invention is to be installed, the angle of incline of the ceiling or other surface is determined and a spherical segment removed from the hemispherical member 15 along a suitable plane as described earlier, and the hemispherical member 15 is then joined to the housing 11 by the brackets 17. The plaster frame 19 is then affixed to the ceiling, for example, by screws passed through suitable openings in the flange 20 of the plaster frame 19. The mounting framework 21 attached to the plaster frame 19 thus extends through the surface into the space above it. The assembly comprising the cap 12, the housing 11, and the hemispherical member 15 is then passed through the central opening of the plaster frame 19, as shown in FIGURE 3. The dome portion 13 is passed through the central opening of the collar 34 such that the collar 34 will ride down the outer surface of the dome portion 13 until it engages the horizontal surface of the cap 12.

The housing 11 is then manipulated so that the screws 36 and 37 mounted in the collar 34 will enter the key slots 39 and 40 in the cap 12. The housing 11 is then rotated slightly so that the screws 36 and 37 cannot escape from the slots 39 and 40 and the screws 36 and 37 then tightened in the locknuts 38 so that the housing assembly is securely fastened to the collar 34. Since the struts 22 and 23 are pivotally mounted to both the collar and the plaster frame, the collar 34 can assume a position perpendicular to the longitudinal axis of the housing 11 so that this axis is maintained in a vertical position. The length of struts 22 and 23 is such that when the housing 11 is screwed to the collar 34, the flange 18 of the hemispherical member 15 will engage, or nearly engage, the plaster 19 and will be parallel to the incline of the ceiling or surface.

In actual practice, it is usually necessary that the building wiring be already in place before the lighting fixture is mounted in its recessed position. To facilitate connection of the wiring to the lighting fixture, the outlet box 14 is preferably made easily attachable to the dome portion 13, for example, by use of screws and key slots similar to the screws 36 and 37 and slots 39 and 40. If this is done, the outlet box 14 is pulled through the opening in the ceiling and attached to the dome portion 13 prior to the installation of the fixture. The installation of the fixture then proceeds in the manner heretofore described.

From the foregoing description, it can be seen that a lighting fixture has been provided that can be adapted for use with ceilings or surfaces that are inclined over a wide range of angles. The lighting fixture is easy and relatively economical to manufacture and may be easily and quickly installed. Once installed, it presents a pleasing appearance as it is provided with an outwardly extending flange that covers any irregularities in the plaster or other surfacing material used around the fixture.

The invention may be embodied in other specific forms not departing from the spirit or central characteristics thereof. The present embodiment is therefore to be considered in all respects as illustrative and not restrictive, the scope of the invention being indicated by the appended claims rather than by the foregoing description, and all changes which come within the meaning and range of equivalency of the claims are therefore intended to be embraced therein.

I claim:

1. A lighting fixture for recessed mounting in an inclined surface comprising: housing means having a generally circular open end; a unitary hemispherical member having an opening therein, said opening having a diameter substantially equal to the diameter of said open end of said housing means and falling in a plane which intersects the plane of the base of said member at substantially the angle of incline of said inclined surface; means mounting said hemispherical member to said housing means with the opening of said hemispherical member overlying said open end of said housing means; means attachable to said surface; and means independent of said hemispherical member for coupling said attachable means with said housing means, said means coupling said attachable means with said housing means being relatively movable with respect to said housing means and said attachable means.

2. The lighting fixture of claim 1 wherein said coupling means comprises a collar for telescoping over a portion of said housing means and a plurality of elongated members, one end of each of said elongated members being pivotally connected to said collar and the other end of each of said elongated members being pivotally connected to said attachable means.

3. The lighting fixture of claim 1 wherein said base of said hemispherical member is provided with an outwardly extending flange.

4. A lighting fixture for recessed mounting in an inclined surface comprising: housing means having a generally circular open end; a hollow unitary hemispherical member having a flange extending outwardly from the base thereof, said base having a diameter greater than the diameter of said open end of said housing means and having an opening in the surface thereof, said opening having a diameter substantially equal to the diameter of said open end of said housing means and falling in a plane which intersects the plane containing the base of said member at an angle substantially equal to the angle of incline of said inclined surface; means fixedly mounting said hemispherical member to said housing means with the opening of said hemispherical member aligned with the open end of said housing means; frame means for mounting on said inclined surface, said frame means including an opening through which said housing means and at least a portion of said hemispherical member may be passed; and means independent of said hemispherical member for coupling said frame means to said housing, said coupling means being movable relative to said frame means and said housing means.

5. The lighting fixture of claim 4 wherein said coupling means comprises a collar for telescoping over a portion of said housing means and a plurality of elongated members, one end of each of said elongated members being pivotally connected to said collar and the other end of each each of said elongated members being pivotally connected to said frame means.

6. The lighting fixture of claim 4 wherein means are provided for mounting an electric lamp within said housing means, said lamp mounting means being detachably connected to the other end of said housing mean.

7. A lighting fixture for recessed mounting in an inclined surface comprising: tubular housing means having a generally circular open end; hollow cap means mounted on the other end of said housing means, said cap means being tapered such that the diameter of the end of said cap means adjacent said housing means is greater than the diameter of the end of said cap means remote from said housing means; means for positioning an electric lamp within said housing means; means detachably connecting said lamp positioning means to the end of said cap means remote from said housing means; a hollow hemispherical member having a base diameter greater than the diameter of said open end of said housing means and having an opening in the surface thereof, said opening having a diameter substantially equal to the diameter of said open end of said housing means and falling in a plane which intercepts the plane containing the base of said member at an angle substantially equal to the angle of incline of said inclined surface; means fixedly mounting said hemispherical member to said housing means with the opening of said hemispherical member aligned with the open end of said housing means; frame means

for mounting on said inclined surface, said frame means having an opening through which said cap means, said housing means and at least a portion of said hemispherical member may be passed; a pair of elongated members each having one end pivotally mounted on said frame means; a collar having a diameter slightly greater than the greatest diameter of said cap means; means pivotally mounting the other end of said elongated members to said collar, the length of said elongated members being such that when said cap means is passed through said collar, said collar engages said housing means when said

flange engages said frame means; and means for detachably connecting said housing means to said collar.

References Cited

UNITED STATES PATENTS

2,826,684	3/1958	Baker	240—78
3,182,187	5/1965	Gellert	240—78

NORTON ANSHER, *Primary Examiner.*

JOHN M. HORAN, *Examiner.*

G. M. HOFFMAN, *Assistant Examiner.*