March 7, 1944. A. F. WEIMANN 2,343,600

METHOD FOR SATURATION OF FIBROUS MATERIAL

Filed March 9, 1940 4 Sheets-Sheet 1

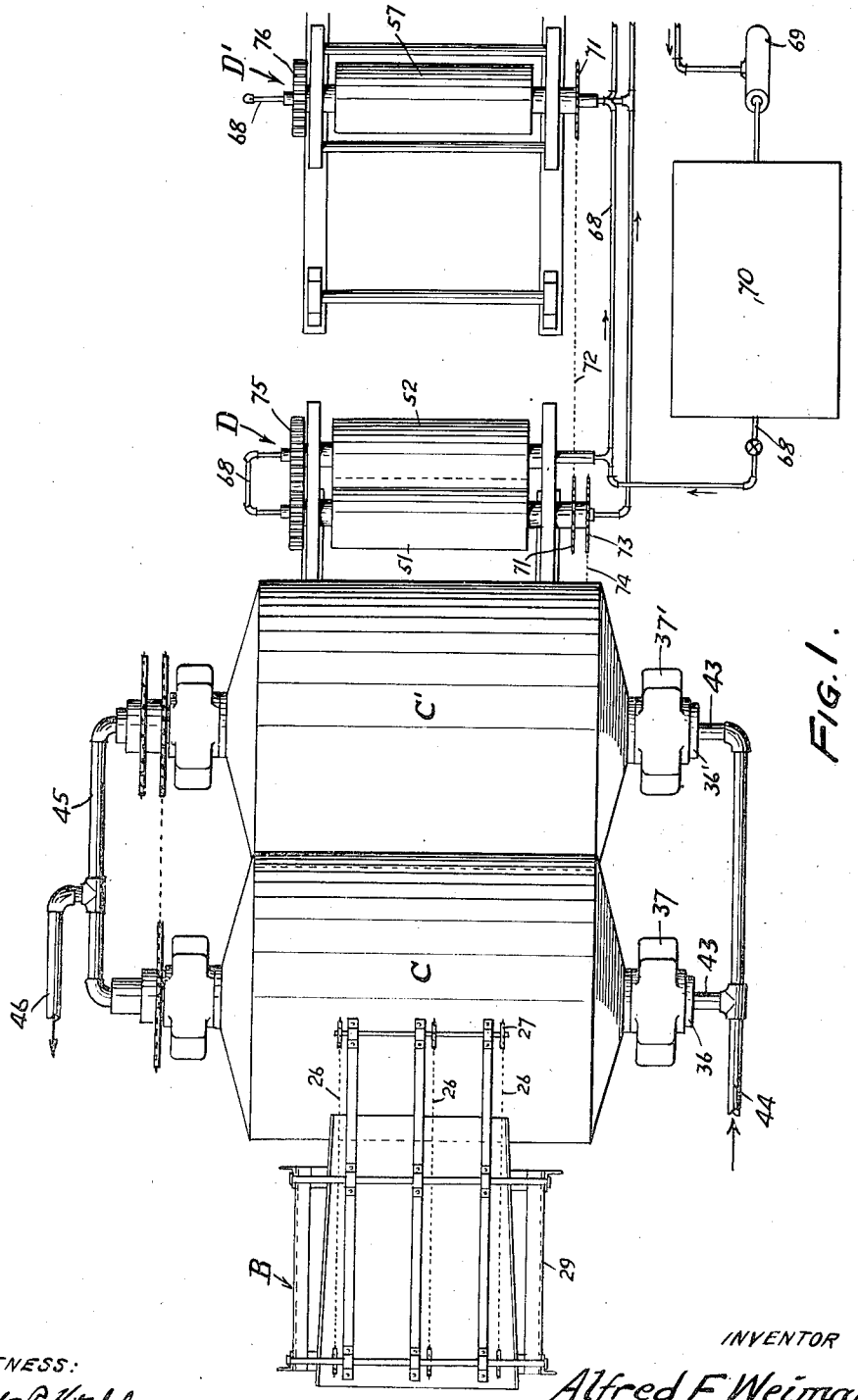

FIG. 1.

WITNESS:
Robt. R. Kitchel.

INVENTOR
Alfred F. Weimann
BY
Busser & Harding
ATTORNEYS.

March 7, 1944. A. F. WEIMANN 2,343,600

METHOD FOR SATURATION OF FIBROUS MATERIAL

Filed March 9, 1940 4 Sheets-Sheet 2

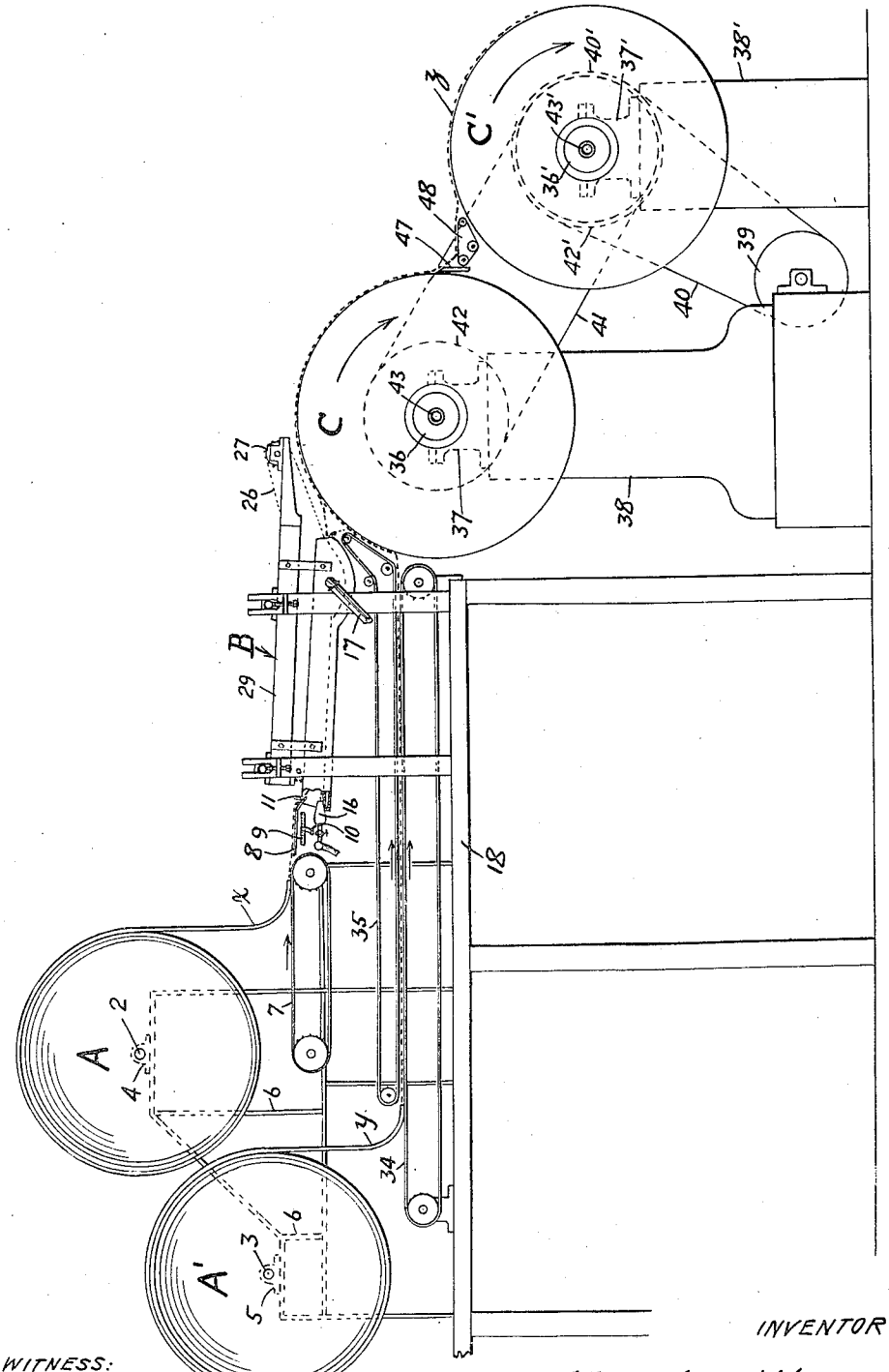

FIG. 1A.

WITNESS:
Robt. R. Mitchel.

INVENTOR
Alfred F. Weimann
BY
Busser & Harding
ATTORNEYS.

March 7, 1944. A. F. WEIMANN 2,343,600

METHOD FOR SATURATION OF FIBROUS MATERIAL

Filed March 9, 1940 4 Sheets-Sheet 3

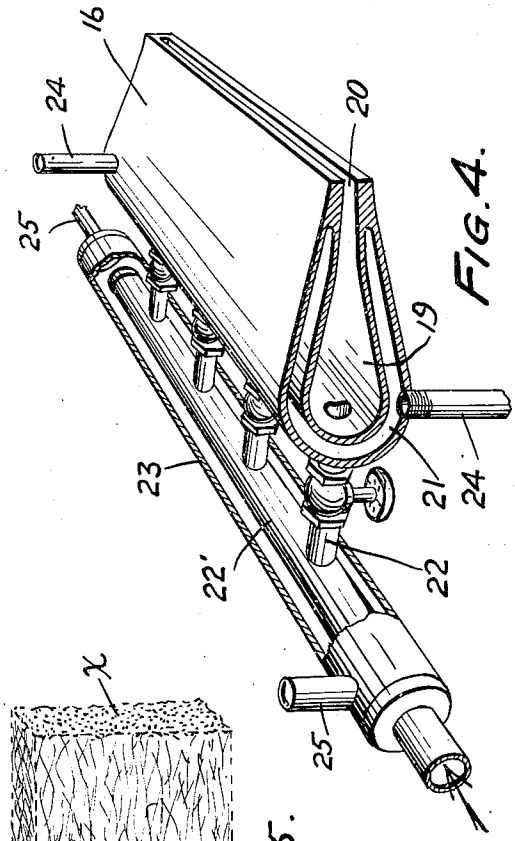

FIG. 4.

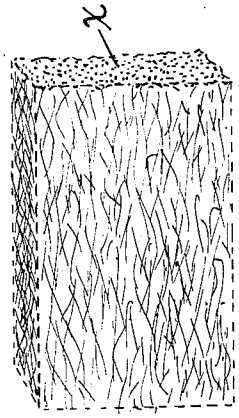

FIG. 5.

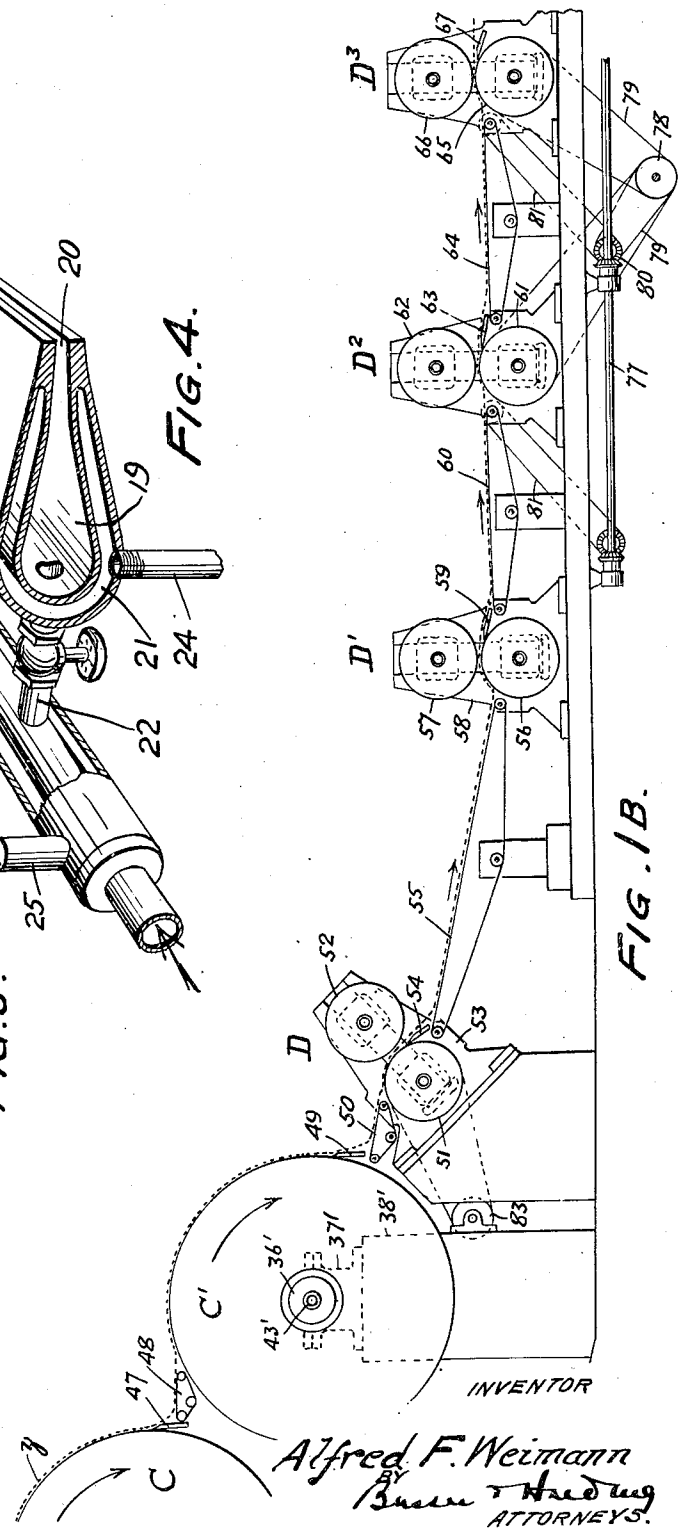

FIG. 1B.

WITNESS:

Robt. R. Mitchel

INVENTOR

Alfred F. Weimann

BY Busser & Harding

ATTORNEYS.

March 7, 1944. A. F. WEIMANN 2,343,600

METHOD FOR SATURATION OF FIBROUS MATERIAL

Filed March 9, 1940 4 Sheets-Sheet 4

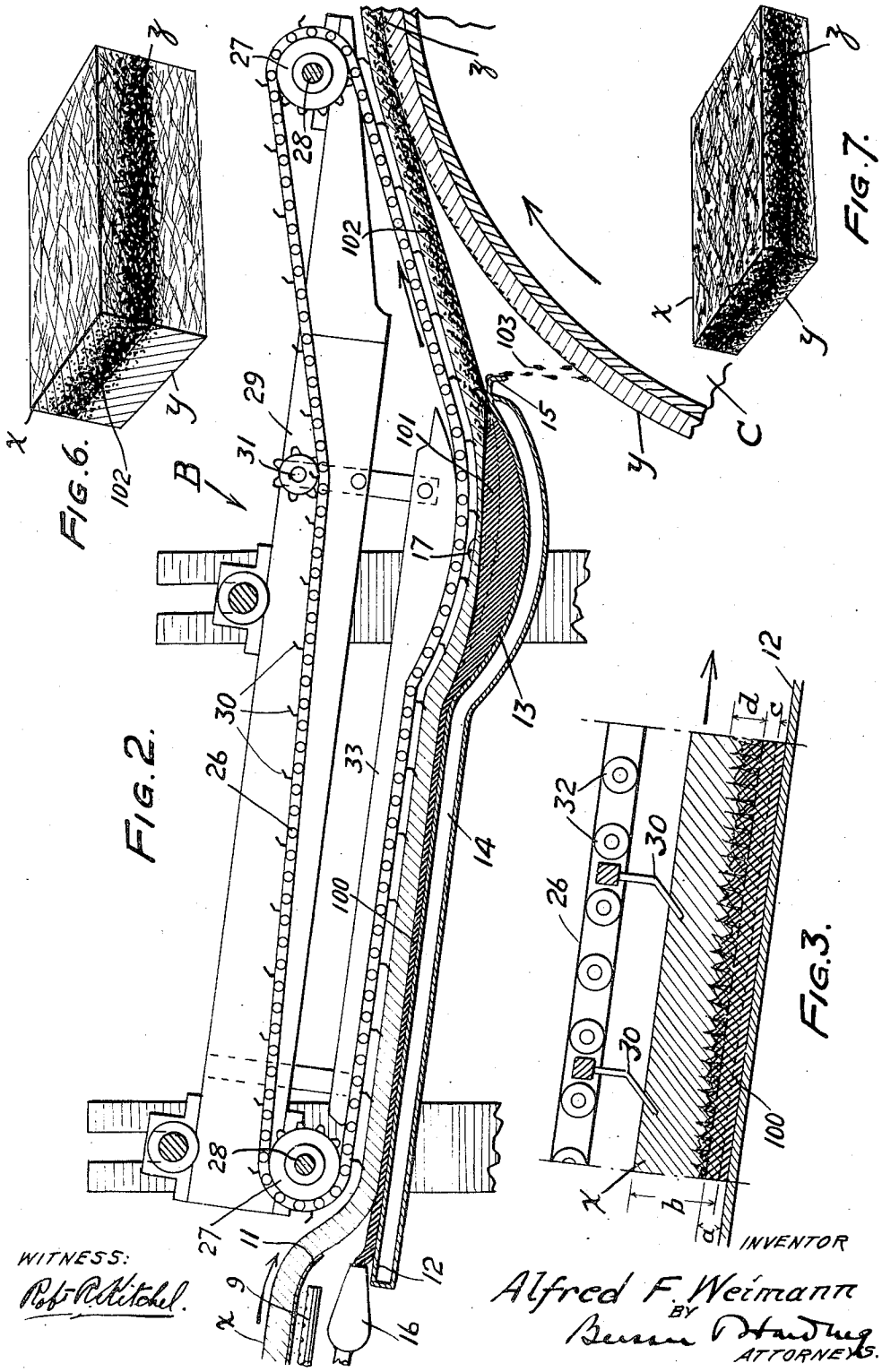

Patented Mar. 7, 1944

2,343,600

UNITED STATES PATENT OFFICE

2,343,600

METHOD FOR SATURATION OF FIBROUS MATERIAL

Alfred F. Weimann, Shelton, Conn., assignor to Barber Asphalt Corporation, Barber, N. J., a corporation of New Jersey

Application March 9, 1940, Serial No. 323,159

3 Claims. (Cl. 154—2)

This invention relates to an improved method for the saturation of fibrous material, and to apparatus for carrying out the said method.

The improved method in accordance with this invention comprises impregnating a mass of organic or inorganic fibres loosely formed into mats or bats with a saturant in liquid form, the amount of saturant employed being only sufficient to partially saturate the bat; reducing the size of the bat, as by compression, to an extent sufficient to cause the saturant carried thereby to saturate completely the reduced bat; and simultaneously with, or immediately following, such reduction, altering the physical characteristics of the saturant, as by a change in temperature, so that the fibres are locked in position thereby and the product will retain its reduced form.

The fibrous material treated in accordance with this invention may comprise a mass of organic fibres, as, for example, "Balsam wool," alpha cellulose fibres, licorice root fibres, jute fibres, animal hair, or the like; or of inorganic fibres, as glass fibres, in the form of glass wool or spun glass, rock wool, slag wool, asbestos fibres, or the like. The fibres will be formed, by conventional methods, into loosely formed mats or bats, which for treatment in accordance with this invention, need not possess any substantial tensile strength.

As a preferred material for treatment in accordance with this invention, glass wool in various commercial forms may be used. As is well known, glass wool is produced by flowing molten glass through small orifices, and blowing a stream or jet of air or steam across the orifices to solidify and carry off glass fibres, which are deposited as a loose mat on a continuous belt conveyor. The mat or bat so formed may be sprayed while still hot with a lubricant, as, for example, lubricating oil, light consistency asphalts, as emulsified asphalt, in order to lubricate the glass fibres and so insure that they slip over each other and that undue breakage in subsequent handling of the bat is avoided.

If the mat or bat of glass wool is intended for use in accordance with this invention, it may be annealed following its formation so as to render the glass fibres more flexible, and thus permit compression of the bat during treatment without extensive breakage of the fibres.

The saturant used in accordance with this invention may comprise any thermoplastic or thermosetting material which can, at some stage, be put in liquid form. Thus, the saturant in accordance with this invention may comprise a thermoplastic material, such as, for example, a bitumen, as asphalt, a resin, as coumar resin, a pitch, a wax, as montan wax, etc., any of which may be put in liquid form either by being melted or by being dissolved in a suitable solvent; a cellulose ester or ether, as cellulose acetate, benzyl cellulose, which may be used in solution in a suitable solvent; or a thermosetting material, as, for example, various phenol-aldehyde condensation products, polyvinyl resins, methyl methacrylate polymers, urea condensation products, polystyrene resins, vulcanized rubber, etc., any of which may be used in accordance with this invention by effecting partial saturation of the fibrous bat with the desired saturant while it is in a stage prior to final condensation or polymerization, and thus is, or can be put, in liquid form with the aid of solvents or emulsification, if necessary. The various thermoplastic or thermosetting materials used as saturants may be plasticized with any suitable plasticizer known to the art.

In proceeding in accordance with this invention the bat of loosely formed fibrous material, as, for example, glass wool, will be brought into contact with the desired saturant in liquid form and permitted to absorb a quantity of saturant sufficient to saturate it completely when it has been compressed or reduced in size to the desired extent, but which in its uncompressed state will only partially saturate it. The partially saturated bat will then be compressed, if desired together with other partially saturated, or wholly unsaturated, bats, until it has been reduced to the desired thickness. Thus, a single bat 2 inches thick, or two bats each 1 inch thick, may be compressed to form a sheet $\frac{1}{16}$ inch thick. The reduced or compressed bats will be substantially completely saturated with saturant, due to the decrease in volume of the bats, and will be treated either simultaneously with, or immediately following, their reduction so as to set the saturant and thus cause the product to retain its reduced form.

Where a molten thermoplastic material is used as a saturant, as, for example, molten asphalt, the setting can be accomplished by chilling the product during or immediately following its compression so as to solidify the saturant. If the thermoplastic saturant is used in solution, the product, during or immediately following compression, will be heated to expel the solvent and, if necessary, cooled to harden the saturant. In case a thermosetting material is used

as saturant, the material will, as indicated, be used in a stage prior to final condensation or polymerization when it is, or can be put, in liquid form; in such case the product, during or immediately following compression, will be heated to expel any solvent that may be present, and to complete the condensation or polymerization reaction and so set the saturant.

More specifically in accordance with this invention a method and means have been devised for forming an improved roofing material by saturation of, for example, glass wool in bat form with molten asphalt. This is accomplished by feeding a continuous bat of glass wool onto the surface of a stream of molten asphalt, flowing at the same rate as the rate of travel of the bat of glass wool so as to avoid tearing the bat, which has substantially no tensile strength; causing the bat to be somewhat more deeply immersed for an instant in a pool of molten asphalt, whereby it is only partially saturated; and compressing and chilling the impregnated bat so as to effect complete saturation and solidify the asphalt.

The nature and purpose of this invention having now been indicated in a general way, a detailed description of a preferred form of apparatus according to this invention will be given, in connection with the description of the operation of which the details of a preferred method according to this invention where a bat of, for example, glass wool is to be saturated with a molten thermoplastic material, as asphalt, will be made apparent; all with reference to the accompanying drawings in which:

Figure 1 is a plan view showing a portion of a preferred embodiment of apparatus according to this invention, certain elements being eliminated for clarity.

Figures 1A and 1B are side elevations which taken together show a complete apparatus according to this invention.

Figure 2 is a sectional view showing details of construction of the saturating element included in the apparatus shown in Figures 1, 1A and 1B.

Figure 3 is a sectional view showing a detail of construction of the saturating element shown in Figure 2.

Figure 4 is a perspective view, partly in section, showing detail of construction of the saturant nozzle included in the saturating element shown in Figure 2.

Figure 5 is a perspective view of a portion of fibre bat such as is adapted for use as a starting material in the practice of the method according to this invention.

Figure 6 is a diagrammatic sketch indicating, in perspective a portion of two joined bats of fibrous material, one of which is partially saturated with saturant, prior to compression thereof.

Figure 7 is a diagrammatic sketch, similar to Figure 6, showing the bats substantially completely saturated with saturant following their compression.

Referring more particularly to Figures 1, 1A and 1B, the form of apparatus shown comprises in general suitable support for rolls A, A′ of base material, as fibre bat, a saturating mechanism B, a pair of cooling rolls C, C′ and a series of successively arranged pairs of reducing rolls or passes D, D^1, D^2 and D^3.

Referring now more particularly to Figures 1A and 2–4, the rolls A, A′, of base material or bats x and y are supported respectively on rolls 2, 3, which are journalled at their ends in bearings 4, 5 mounted on a framework 6. If necessary, the rolls 2, 3 may be driven by any suitable means. Beneath the roll A and adapted to receive the bat x is a belt conveyor 7, which travels in the direction of the arrow and which may be desirably formed of leer cloth. Adjacent the delivery end of conveyor 7 is a metal table 8 extending on a downward slope for the reception of the bat x from the conveyor and adapted to be heated by a burner 9 connected with a source of fuel, as gas, by a pipe 10. The edge portion of the table 8 remote from the conveyor 7 is bent downwardly to form a lip 11, which overhangs an end of a saturant trough 12 extending on a downward slope and the opposite end portion of which is curved downwardly and then upwardly to form a pool 13. The bottom of the trough 12 is supported in any suitable manner from a main frame 18 and is provided with a jacket 14, for a heating medium and a turned-down lip 15 is provided on its end. Beneath the lip 11 on table 8 is a nozzle 16 for the discharge of saturant into the trough and an overflow pipe 17 leads from the pool 13 for the maintenance of a level of saturant therein.

The saturant nozzle 16, shown in detail in Figure 4, comprises a body 19 of a length about equal to the width of the saturant trough 12 and provided with a narrow discharge opening 20 and with a jacket 21 for a heating medium. Saturant is supplied to the body 19 of the nozzle through a plurality of spaced pipes 22 leading from a manifold 22′ provided with a jacket 23 for a heating medium and connected to any suitable container for a supply of saturant. Pipes 24 are provided for the circulation of a heating medium, as for example, heated oil, from any suitable source, through the jacket 21 of the nozzle 16 and pipes 25 are provided for circulation of a heating medium through the jacket 23 of the manifold 22.

As shown in some detail in Figures 2 and 3, a series of three parallel chain conveyors 26 are mounted above the trough 12 and extend beyond the lip 15, at the end of the trough, into proximity to the cooling roll C. The conveyors 26 run over sprockets 27 carried by shafts 28, one of which is driven, which in turn are mounted on a frame 29 supported for vertical adjustability from the main frame 18. The conveyors are provided with bat-engaging spuds 30, the lower end portions of which extend backwardly of the forward movement of the conveyor. The lower runs of the conveyors extend parallel with the bottom of the trough, conform to the bottom of the pool 13 and, beyond the lip 15, extend upwardly to a point in proximity to the periphery of cooling roll C, in a direction tangential thereto. Idler sprockets 31 serve to guide the upper runs of the conveyors, while the lower runs are guided with reference to the bottom of the trough and of the pool 13 by the engagement of rollers 32 with guides 33 supported from the vertically adjustable frame 29.

Beneath the roll A′ and adapted to receive the bat y is a suitably driven belt conveyor 34, desirably of leer cloth, which extends to a point adjacent to the cooling roll C. Spaced above the belt conveyor 34 are a series of spaced, suitably driven belts 35, the lower runs of which extend from beyond the point of contact of the bat y with conveyor 34 in parallelism therewith to adjacent the periphery of cooling roll C and then for a

distance tangential thereto to a point beneath the lip 15 at the end of trough 12.

The cooling rolls C and C′ are of relatively large diameter and mounted on hollow trunnions 36, 36′, supported in bearings 37 supported from supports 38, are arranged with the roll C in advance and above the roll C′, as shown, for example, in Figure 1A. The roll C′ is driven, in the direction of the arrow Fig. 1A, by a motor 39 through chain 40, which engages a sprocket 40′ on trunnion 36, while roll C is driven from roll C′ by a chain 41 engaging sprockets 42, 42′ on the trunnions 36 and 36′. The sprockets 42, 42′ are of the same size so that the two rolls will travel at the same speed.

Brine, or other cooling medium, contained in a suitable tank and refrigerated by any suitable refrigerating apparatus, is circulated, by a pump, through pipes 43, 43 extending into the rolls C, C′ through the hollow trunnions 36, 36′ and connected with pipe 44 in turn connected with the discharge of the brine pump, return of brine to the brine tank being through pipes 45 extending into the drums through the hollow trunnions at the opposite ends of the drums and connected to a pipe 46 leading to the brine tank. Desirably the surface of the drums C, C′ will be maintained at a temperature of about 35° F. by a sufficient circulation of brine refrigerated to a suitable temperature.

Extending longitudinally of the surface of the drum C is a doctor blade 47. The doctor blade in its direction of operation desirably extends in a direction substantially tangential of the drum. Beneath the doctor blade and extending between the drums is a suitably driven belt conveyor 48 adapted to receive material doctored from the drum C and convey it to the drum C′. The conveyor 48 is driven at a lineal speed equal to the peripheral speed of the drums C and C′, which, as has been indicated, are driven at the same speed.

Referring now more particularly to Figures 1 and 1B, a doctor blade 49 is associated with the cooling drum C′ and beneath it is a belt conveyor 50 extending at a downward angle to adjacent to the pair of reducing rolls D. The conveyor acts to receive material from the cooling drum C′ and support and convey it to the pair of rolls D.

The pair of rolls D comprise rolls 51, 52, which are adjustably mounted in a frame 53 extending at an angle to the horizontal. The pass between the rolls 51, 52 is adjusted to preliminarily compress or reduce the material passing therethrough and is located at a level somewhat lower than the level of the conveyor 50. A doctor blade 54 is associated with the lower roll 51 and is adapted to free material therefrom, while a belt conveyor 55 is located beneath the doctor blade and extends downwardly to adjacent the second pair of reducing rolls D^1. The rolls D^1 comprise rolls 56 and 57 adjustably mounted in a frame 58. The rolls 56 and 57 are adjusted closer than are the rolls 51 and 52 for further compression or reduction of the material. A doctor blade 59 is associated with the lower roll 56 and a belt conveyor 60, which may be horizontal, serves to convey the material from the rolls D^1 to the rolls D^2, comprising rolls 60, 61, which are the same as the rolls D^1, except that they are adjusted more closely together for further compression or reduction of the material. A doctor blade 63 is associated with the lower roll 61 and a belt conveyor 64, which may be horizontal, serves to carry the material to the roll D^3, comprising rolls 65 and 66, which are the same as the rolls D^1 and D^2. A doctor blade 67 is associated with the lower roll 65.

The several rolls of the sets of rolls D—D^3 are desirably cooled by a circulation of brine and to such end are mounted on hollow trunnions connected by piping 68, including a pump 69, with a brine tank 70 containing suitably refrigerated brine.

The several sets of rolls D—D^3 may be driven in any suitable manner. Thus, the sets of rolls D, D^1 may be driven through sprockets 71, 71 secured to the trunnions of the lower rolls 51 and 56 and connected by a chain 72, a sprocket 73 driven by a chain 74 from a suitable prime mover being connected to the trunnion of roll 51 and the rolls 51, 52 and 56, 57 being geared together by gearing 75, 76, respectively. The rolls D^2 and D^3 may be driven in a similar manner from driven shaft 77 through bevel gears 80, sprockets 78 and chains 79. The driven shaft 77 may also serve to drive the conveyors 60 and 64 through bevel gears 80 and belts or chains 81.

In operation of the apparatus described the bat *x* of, for example, glass wool, is fed on to and over the table 8 by the action of a conveyor 7, which frictionally engages the under surface of the bat *x* to an extent just sufficient to cause it to be fed from the roll A without breaking or tearing of the bat which, if formed of glass wool, will have a very low tensile strength. In passing over the table 8, the bat *x* is heated by flames from the burner 9, so as to be annealed. The bat *x* then passes off over the lip 11 of the table 8 and drops a slight distance on to the surface of a moving stream 100 of molten saturant issuing from the nozzle 16 on to the surface of the saturating trough 12. By careful control of the temperature and the pressure head upon the molten saturant issuing from the nozzle 16, the rate of travel of the stream 100 is made to coincide exactly with the rate of travel of the bat, so that no shearing action which would tend to break or tear the bat *x* will take place.

The bat *x*, which has a thickness indicated by the reference character *b* in Figure 3 of, for example, ¾ inch, sinks into the stream of molten saturant 100 to some extent under the combined influence of capilarity and the slight downward pressure exerted by the spuds 30 on the conveyors 26. The downward pressure exerted by the spuds 30 is, however, only very slight, since the purpose of the conveyor 26 is to cause the bat *x* to move along with the flowing stream 100 rather than to force it to any substantial extent beneath the surface of this stream. As indicated in Figure 3, the bat *x* may sink into the stream of molten saturant which will have a depth, indicated by the reference character *a*, of, for example, 1/8 inch, to a depth indicated by the broken line *c*. Meanwhile, during the progress of the bat *x* along the saturant trough 12, the molten saturant, by capillary action, penetrates the under portion of the bat, as indicated in Figure 3, to an extent indicated by the reference character *d*.

As the bat *x*, already saturated to the extent indicated by the reference character *d*, reaches the pool 13 of molten saturant, it is forced by the action of the conveyors 26 more deeply into the molten saturant, as indicated at 101, for a brief interval. The time and depth of immersion are so adjusted as to cause the bat *x* to absorb just sufficient saturant to effect substantially com-

plete saturation of the final product after compression of the bat or bats.

In the meantime the bat y has been fed from the roll A' by the action first of conveyor **34** and then of conveyors **34** and **35** jointly, on to the surface of the first cooling roll C. If desired, the bat y may be annealed, after leaving the roll A', in the same manner as bat x by being passed over a plate heated by a burner. On starting up operation it will be necessary to feed the bat y manually from the point at which it leaves conveyor **34** on to the surface of the cooling roll C, and until, as hereinafter described, it has been engaged by the partially impregnated bat x. Once this has been accomplished the feed of the bat y will be automatic.

As the bat x leaves the pool **13** of molten saturant, it draws with it a small quantity of the molten saturant, which consequently spills over the lip **15** and falls, as indicated at **103**, on to the surface of the bat y carried on the cooling roll C. The continued rotation of the roll C brings the bat x carrying, as indicated at **102**, substantially the entire quantity of molten saturant required for complete saturation of the final product, into contact with the bat y, the upper or contacting surface of which has been, as it were, sprinkled with molten saturant. As a result the two bats are cemented together by the molten saturant along the line z, and from that point continue through the process as a single sheet or bat of material.

The combined bats x and y are carried on cooling roll C and thence over cooling roll C', as indicated in figures 1A and 1B, and are finally removed from the cooling rolls by the doctor blade **49**.

In the passage over the cooling rolls C, C' the temperature of the molten saturant carried by the combined bats x and y is substantially reduced and any saturant approaching, under the combined influence of capilarity and pressure, the surface of the cooling rolls is congealed. As a result, a skin of congealed saturant is, in effect, formed within the bat and serves to prevent loss of saturant from the bats and consequent adhesion to the rolls, but the main body of saturant within the bats is not lowered to a temperature sufficient to render it non-fluid.

The combined bats x and y carrying the saturant, which, as indicated, has been surface cooled to an extent to cause the formation of a skin, are then passed through the press rolls D, D^1, D^2 and D^3, and thereby reduced to the desired thickness. At the same time, the saturant cools to an extent sufficient to bind the fibres of the compressed bats in their final form so that upon issuing from the rolls D^3 the product will no longer expand after release of the pressure.

In the passage of the combined bats through the press rolls, the reduction will preferably be accomplished in steps, each successive pair of rolls D, D^1, D^2, D^3 being set closer together, so as to prevent undue breakage of the glass fibres which may occur if complete reduction is attempted in a single step. In such step by step reduction, a partial and temporary expansion may occur between passes as the pressure is released.

The nature of the material while passing over the cooling rolls C, C' is indicated in Figure 6, in which x and y indicate the respective bats, **102** indicates the absorbed saturant, and z indicates the plane of junction of the two bats. The final product issuing from the last press rolls D^3 is shown in Figure 7, in which the reference characters x, y and z have been retained to indicate the constituent parts of the product. It is to be understood, however, that in the final product no such separation into constituent parts is possible, and that the final product rather comprises a unitary mass of fibrous material completely impregnated with the saturant.

It will be understood that if the saturant employed is of a type such that it is to be set by heat rather than by cooling, or that if a solvent is to be removed before the saturant is set, the rolls C, C' may be heated, as by the introduction of steam, rather than cooled by the introduction of brine, and that such heated rolls may precede other similar cooled rolls. In other cases it may be desirable to effect the cooling or heating simultaneously with compression of the fibrous material, in which case the press rolls, as D. D^1, D^2, D^3 may be heated or cooled, as the case may be, or, if desired, the press rolls may precede rather than follow the cooling rolls.

It will be understood that the words "liquid" and "solid" and terms derived therefrom are used in this description and in the claims hereinafter set forth, not in any narrow technical sense, but rather in a relative sense; and that where plastic materials are concerned they may refer to states of relatively low viscosity and easy mobility and of very high viscosity and slight mobility, respectively.

All these and other obvious modifications of the specific apparatus and process described are within the scope of this invention, which is not limited to the particular details of mechanism and procedure hereinbefore set forth, but is directed broadly to the invention herein described as set out in the following claims.

What I claim and desire to protect by Letters Patent is:

1. The method of treating a fibrous material which comprises continuously passing a loosely formed bat of fibrous material into contact with a liquid comprising a saturant capable of acting when in solid form as a binder for the fibres of said bat, permitting absorption by the bat of only sufficient of said liquid to saturate only a part of the thickness of the bat, compressing the partially saturated bat to reduce its thickness to an extent sufficient to cause the liquid carried thereby to substantially completely saturate the compressed bat, and effecting solidification of the said saturant, whereby the fibres in the compressed bat are bound together by the solidified saturant and the bat thereby retains its reduced form.

2. The method of treating a fibrous material which comprises continuously passing a loosely formed bat of fibrous material into contact with a liquid comprising a saturant capable of acting when in solid form as a binder for the fibres of said bat, permitting absorption by the bat of only sufficient of said liquid to saturate only a part of the thickness of the bat, continuously feeding a second, substantially unsaturated, loosely formed bat of fibrous material into contact with and thence along with the said partially saturated bat, compressing both bats so as to merge them and reduce their combined thickness to an extent sufficient to cause the liquid carried thereby to substantially completely saturate the combined compressed bats, whereby the fibres in the compressed bats are bound together by the solidified saturant and the bat thereby retains its reduced form.

3. The method of treating a fibrous material which comprises continuously passing a loosely formed bat of glass wool into contact with a molten asphalt, permitting absorption by the bat of only sufficient of said molten asphalt to saturate only a part of the thickness of the bat, continuously feeding a second, substantially unsaturated, loosely formed bat of glass wool into contact with and thence along with the said partially saturated bat, compressing both bats so as to merge them and reduce their combined thickness to an extent sufficient to cause the molten asphalt carried thereby to substantially completely saturate the combined compressed bats, and cooling the compressed bats to solidify the asphalt, whereby the fibres in the compressed bats are bound together by the solidified asphalt and the bats thereby retain their reduced form.

ALFRED F. WEIMANN.