PCT WORLD INTELLECTUAL PROPERTY ORGANIZATION
International Bureau

INTERNATIONAL APPLICATION PUBLISHED UNDER THE PATENT COOPERATION TREATY (PCT)

(51) International Patent Classification 5 :		(11) International Publication Number:	WO 92/00618
H01R 23/68, 23/70	A1	(43) International Publication Date:	9 January 1992 (09.01.92)

(21) International Application Number: PCT/US91/03419

(22) International Filing Date: 16 May 1991 (16.05.91)

(30) Priority data:
544,458 27 June 1990 (27.06.90) US

(71) Applicant: AMP INCORPORATED [US/US]; P.O. Box 3608 (470 Friendship Road), Harrisburg, PA 17105-3608 (US).

(72) Inventors: KORSUNSKY, Iosif ; 3971 Dora Drive, Harrisburg, PA 17110 (US). SCHROEPFER, Richard, Clair ; R.D. #1, Box 202A, Thompsontown, PA 17094 (US).

(74) Agents: SEITCHIK, Jay, L. et al.; AMP Incorporated, P.O. Box 3608 (470 Friendship Road), Harrisburg, PA 17105-3608 (US).

(81) Designated States: AT (European patent), BE (European patent), CH (European patent), DE (European patent), DK (European patent), ES (European patent), FI, FR (European patent), GB (European patent), GR (European patent), IT (European patent), KR, LU (European patent), NL (European patent), NO, SE (European patent).

Published
With international search report.

(54) Title: CIRCUIT BOARD CONNECTOR HAVING IMPROVED LATCHING SYSTEM

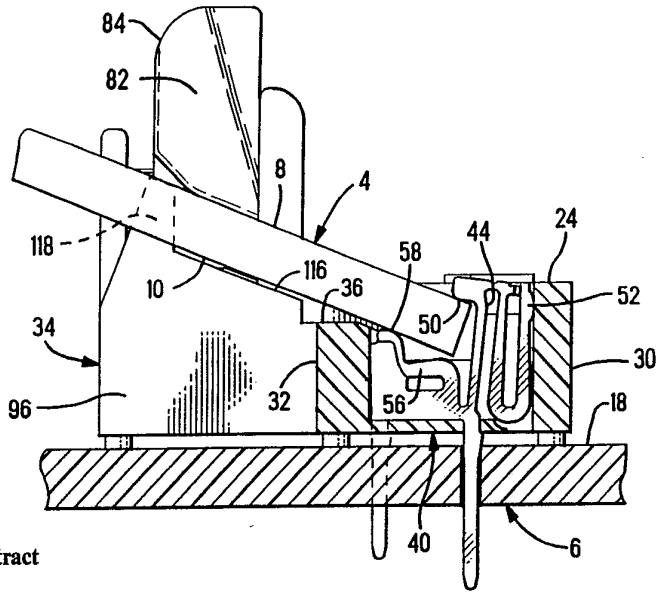

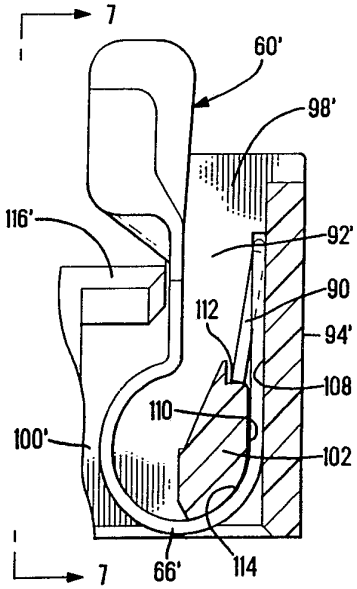

(57) Abstract

Edge connector (2) for a circuit board (4) has stamped and formed latch members (60, 60') at each end (28, 28') of the connector housing (22). The circuit board (4) extends at an acute angle from the board receiving face (24) of the housing (22) when the board (4) is in its fully inserted functional position. Each latch member (60, 60') is U-shaped and has one arm (62) which has a shoulder (86). The shoulders (86) overlap side edge portions of the board (4) and are directed towards the board receiving face (24). The housing (22) has integral support members (102) which are against the bight portions (66, 66') of the U-shaped latch members (60, 60') thereby to enhance the board retaining effect of the latch members (60, 60'). Each latch member (60, 60') has a convex camming surface (84) along which the edge of the board (4) moves when the board (4) is pivoted from an initial insertion position to its functional position.

FOR THE PURPOSES OF INFORMATION ONLY

Codes used to identify States party to the PCT on the front pages of pamphlets publishing international applications under the PCT.

AT	Austria	**ES**	Spain	**MG**	Madagascar
AU	Australia	**FI**	Finland	**ML**	Mali
BB	Barbados	**FR**	France	**MN**	Mongolia
BE	Belgium	**GA**	Gabon	**MR**	Mauritania
BF	Burkina Faso	**GB**	United Kingdom	**MW**	Malawi
BG	Bulgaria	**GN**	Guinea	**NL**	Netherlands
BJ	Benin	**GR**	Greece	**NO**	Norway
BR	Brazil	**HU**	Hungary	**PL**	Poland
CA	Canada	**IT**	Italy	**RO**	Romania
CF	Central African Republic	**JP**	Japan	**SD**	Sudan
CG	Congo	**KP**	Democratic People's Republic of Korea	**SE**	Sweden
CH	Switzerland			**SN**	Senegal
CI	Côte d'Ivoire	**KR**	Republic of Korea	**SU**	Soviet Union
CM	Cameroon	**LI**	Liechtenstein	**TD**	Chad
CS	Czechoslovakia	**LK**	Sri Lanka	**TG**	Togo
DE	Germany	**LU**	Luxembourg	**US**	United States of America
DK	Denmark	**MC**	Monaco		

CIRCUIT BOARD CONNECTOR HAVING IMPROVED LATCHING SYSTEM

This invention relates to electrical connectors having stamped and formed metal latches for latching an inserted circuit board to the connector housing. The invention is particularly concerned with connectors of the type which receive the circuit board with the plane of the board extending at a first acute angle relative to the board receiving face of the connector and which requires pivoting of the board to a functional position in which it extends at a second acute angle which is less than the first acute angle.

It is common practice to provide latches on edge connectors for circuit boards for latching the circuit board to the connector housing when it has been inserted and is in its functional position. Under some circumstances, the latches can be integrally molded as part of the housing; however, integral plastic latches have shortcomings in that they are subject to breakage or other damage and they may not provide sufficient retaining force for some circumstances, particularly where the connector housing contains a large number of contact terminals which exert relatively high forces on the circuit board. Accordingly, it is common practice also to provide stamped and formed metal latches for retaining the circuit board in its functional position in the connector housing. In accordance with one aspect thereof, the invention is directed to the achievement of an improved metal latch for a circuit board edge connector which is capable of exerting relatively high retention forces on the inserted circuit board and which is not subject to damage as a result of careless or other inappropriate handling.

One known type of circuit board connector requires insertion of the edge portions of the circuit board into the connector housing with the plane of the board

extending at a first acute angle relative to the board receiving face of the housing and requires pivotal movement of the circuit board to its functional position in which it extends at a second acute angle which is less than the first acute angle. Again, connectors of this type have been produced which have integral plastic latches which may be satisfactory under some circumstances but which are inadequate for conditions where a large number of contact terminals are contained in the connector housing and where relatively high forces are imposed on the circuit board by the terminals when the circuit board is in its fully inserted functional position. In accordance with a further aspect thereof, the invention is directed to the achievement of an improved connector latching system for circuit boards which require such pivotal movement of the board when it is moved from its insertion position to its functional position.

In accordance with one aspect thereof, the invention is an electrical connector housing having opposite ends, a board receiving face, and a mounting face which is directed oppositely with respect to the board receiving face. In use, the connector is placed on a printed circuit mother board with the mounting face against the surface of the mother board. A trough-like recess extends into the board receiving face and between the ends. Each of the ends has a latch receiving cavity extending into the board receiving face and a stamped and formed latch member is contained in each of these cavities. Each latch member is generally U-shaped and has first and second arms which extend from a bight. The first arm of each latch member is proximate to the recess and is flexible towards the second arm to permit insertion of edge portions of a circuit board into the recess. The first arm of each latch member has shoulder means which engages the board after insertion and

retains the board in the recess. The connector is particularly characterized in that each of the latch receiving cavities has an integral support member extending thereacross and between the arms of the latch member. The bight portion of each latch member is between the support member and the mounting face and the support members are adjacent to the bight portions of the cavities so that upon flexure of the first arms towards the second arms during insertion of a circuit board into the recess, the bight portions are supported by the support members and the board retaining effect of the latch members is thereby enhanced. In the preferred embodiment, each of the latch receiving cavities extends through the housing from the board receiving face to the mounting face and each of the support members has a shoulder thereon which is proximate to a cavity sidewall and which is directed towards the board-receiving face. Each of the latch members has a locking ear which is against its associated shoulder. The latch members are assembled to the housing by insertion of the latch members into the cavities from the mounting face towards the board receiving face of the housing and the second arms are between the support members and the one sidewall.

A preferred embodiment of the invention comprises a connector of the type which receives the edge portions of the circuit board with the plane of the circuit board extending at a first acute angle with respect to the board receiving face of the connector housing. After the circuit board is in its insertion position, it is pivotally moved relative to the board receiving face until the plane of the board extends at a second acute angle which is less than the first acute angle. Each latch member comprises a latch arm having a fixed end, an adjacent portion, an intermediate transition portion, and an end portion. The adjacent portion extends from

the fixed end of the arm to the transition portion and the end portion extends from the transition portion to a free end. The fixed end is in the housing and the latch arms extend substantially normally of the board receiving face. The intermediate portion of each latch arm has a board engaging shoulder which is directed towards the board receiving surface of the connector housing. The end portion has a board engaging camming surface which extends from the shoulder towards the free end and which is engaged by side edge portions of the board when it is moved from its insertion position to its functional position. The camming surface is a convex surface which is formed at the juncture of two planar sections which extend from the intermediate portion of the latch member.

Figure 1 is a plan view of a circuit board edge connector in accordance with the invention.

Figures 2 and 3 are views looking in the direction of arrows 2-2, 3-3, and 4-4 of Figure 1.

Figure 4 is a sectional view looking in the direction of the arrows 4-4 of Figure 1 but showing the connector mounted on a second circuit board and showing a first circuit board positioned in the board receiving recess of the connector housing in its insertion position.

Figure 5 is a view similar to Figure 4 but showing the positions of the parts after the inserted first circuit board has been pivoted to its functional position.

Figure 6 is a cross-sectional view looking in the direction of the arrows 6-6 of Figure 1.

Figure 7 is a view looking in the direction of the arrows 7-7 of Figure 6 but showing the latch member exploded from the latch receiving cavity in the connector housing.

Figures 8, 9, 10, and 11 are perspective views of one of the latch members, each of these views showing the latch member in a position rotated 90 degrees about a vertical axis from its position as shown in the previous view.

Figure 12 is a plan view of a first circuit board which is received by the connector of Figure 1.

Figure 13 is a plan view of one of the contact terminals contained in the connector housing.

A connector assembly 2, in accordance with the invention, Figures 1-5, serves to connect terminal pads 16 on a first circuit board 4 (Fig. 12) to conductors on a second circuit board 6 on which the connector assembly 2 is mounted. The circuit board 4 has upper and lower surfaces 8, 10 as viewed in the drawing, parallel side edges 12, 12', and a mating edge 14 which extends between the side edges and which is received in the connector housing. The terminal pads 16 are provided along the mating edge 14 on both of the surfaces 8, 10. The circuit board 6 has upper and lower surfaces 18, 20 and the connector assembly 2 is shown as being mounted on the upper surface with the terminals in the connector connected to conductors on the circuit board 6 by terminal posts 59. Alternatively, the connector assembly 2 may be surface mounted on the upper surface 18.

The connector assembly 2 comprises a molded insulating housing 22 having an upper board receiving surface 24, a lower surface 26 which serves as the mounting surface, opposite ends 28, 28' and side surfaces 30, 32 which extend between the ends. Extensions 34, 34' project from the ends 28, 28' and are provided with latch receiving cavities which receive the latching members 60, 60' for the first circuit board.

The upper surface 24 has a reduced height portion 36 which extends adjacent to the side 32 and a trough-

like board receiving recess 38 extends between the ends and beside the reduced height portion. Spaced apart contact terminals 40 are contained in this trough-like recess for contacting the terminal pads on the circuit board. Each terminal, Figure 13, comprises a generally L-shaped frame or base portion 42 having first and second contact arms 44, 46 extending therefrom. The first arm 44 of each contact terminal extends from the right-hand end of the base portion, as viewed in the drawing, and has an enlarged free upper end 48. An edge portion 50 of this enlarged free end serves as a contact surface for engagement with the terminal pads on the upper surface of the circuit board. A relatively strong and stiff U-shaped spring 52 is integral with the enlarged free end and has one arm which bears against an internal wall portion 54 of the trough-like recess 38. The second arm is serpentine and extends along a conforming edge 61 of the base portion. The base portion thus supports the second arm when the circuit board is in its inserted functional position. The contact surface on the second arm comprises an edge portion thereof as shown at 58. The terminal shown has an integral solder post portion 59 which extends through an opening in the second circuit board 6 and is adapted to be soldered to a conductor on the under side of the board. Mounting posts 124 are provided for locating the housing on the second circuit board and standoffs 126 are provided so that the mounting surface will be elevated above the surface 18 of the second circuit board.

As shown in Figures 4 and 5, the circuit board 4 is initially inserted into the trough-like recess 38 at a first acute angle relative to the upper surface 24 of the housing and relative to the surface 18 of the second circuit board 6. The circuit board 4 is then pivotally moved to a functional position as shown in Figure 5 in

which it extends at a second acute angle which is less than the first acute angle. When the circuit board is in its functional position, Figure 5, it must be latched in the position shown in order to maintain the contact portions 50, 58 of the terminals 40 in engagement with the terminal pads and to prevent clockwise movement of the first circuit board from its functional position. The connector assembly will frequently contain a relatively large number of contact terminals and each terminal exerts, through the first arm 44 and the first contact portion a relatively high force on the upper surface of the circuit board tending to pivot the board about the contact portion 58 of the second arm 46 in a clockwise direction from the position shown in Figure 5. Collectively, the terminals exert an extremely high force on the circuit board and it is necessary to provide latches to secure the board in its functional position, Figure 5. The latching means, in accordance with the present invention, will now be described.

The latching means comprises a pair of stamped and formed latch members 60, 60' which are mounted in the extensions at the ends of the connector housing. The latch members 60, 60' are mirror images of each other and the same reference numerals, differentiated by prime marks, will be used to identify corresponding structural features in the two latch members. In the description which follows, the unprimed reference numerals of the latch member 60 are used exclusively, although some of the drawings show the latch member 60'.

Each latch member comprises first and second arms 62, 64 which extend from a circular bight 66. The bight 66 extends tangentially at 68 from the second arm 64 through an angle of about 270 degrees and merges at 70 with the first arm 62. The first arm has an adjacent portion 72 which is adjacent to the bight, an intermediate transition portion 74, and an end portion

76 which extends from the transition portion to a free end. The transition portion comprises a generally triangular ear 78 which extends laterally outwardly from the transition portion. Ear 78 is inclined upwardly from side edge 73 to side edge 75 so that the underside 86 of the ear provides an inclined downwardly facing shoulder as shown in Figure 5. Vertical planar sections 80, 82 extend from the sides of the ear 78 and are joined to each other along a convex curved surface 84. This convex curved surface functions as a camming surface which extends from the upper free end of the planar sections to the triangular ear and this curved surface is engaged by a side edge 12 of the circuit board 4 when it is pivoted from its insertion position, Figure 4, to its functional position, Figure 5. The ear overlaps the side edge 12 of the circuit board 4 when the board is in its functional position, Figure 5.

The second arm has a free end 88 and a retention lance 90 which extends from a location adjacent to the free end downwardly and inwardly towards the first arm.

The latches are received in latch cavities 92, 92' which extend through the extensions 34, 34' from the board receiving surface to the mounting surface. The extensions have external side surfaces 94, 94' which extend from the end walls 28 and opposed extension side surfaces 96, see Figures 4 and 6.

Each cavity has an upper end 98, and an enlarged lower end 100 which is capable of accommodating freely the circular bight portion 66 of the associated latch member. Each cavity further has an integral support 102 extending therethrough between opposed internal cavity walls 104, 106. These support members 102 are provided with upwardly, as viewed in Figure 6, directed shoulders 112 against which the end of the associated lance 90 is supported when the latch member is assembled to the

housing. Each support 102 has a surface 110 which is parallel to an adjacent internal surface 108 of the cavity but spaced therefrom by a distance sufficient to accommodate the thickness of the second arm of the latch member. The support member also has a curved surface 114 which is opposed to, and which conforms to, the curved surface the bight of the latch member. As shown in Figure 6, the support member is thus against a portion of the bight of the latch member and when the first arm is flexed outwardly (rightwardly in the case of the latch member 60' shown in Figure 6) during pivotal movement of circuit board 4 from its insertion position to its functional position flexure takes place in the portion of the bight 66 which extends from the support 102 to the adjacent portion 72 of the first arm 62.

The extensions 34, 34' have upwardly facing inclined surfaces 116, 116' which are between the latch receiving cavities 92, 92' and the opposed side surfaces 96, 96'. Surfaces 116, 116' are substantially parallel to the shoulder surfaces 86, 86' and the circuit board 4 is clamped between the shoulder surfaces and the surfaces 116, 116' when it is in its functional position, Figure 5. Locating bosses 118, 118' extend upwardly from the surfaces 116, 116' and are received in openings 119, 119' in the circuit board. Additionally, a locating boss 120 is provided on the housing between the ends thereof and serves to locate the board by means of a notch 122 in the mating edge.

After the connector assembly 2 has been installed on the upper surface 18 of the circuit board 6, either by means of mounting posts and standoffs as shown or by surface mounting techniques, the circuit board 4 is assembled to the connector assembly 2 by inserting the mating edge portion into the recess 38 at a first acute angle as shown in Figure 4. The connector is of the low

insertion force type or the zero insertion force type in that very little force is required to place the circuit board 2 in the position shown in Figure 4. After initial insertion, the circuit board is pivoted downwardly in a counter-clockwise direction in Figure 4 so that the side edges 12, 12' move along the convex camming surfaces 84, 84' and flex the first arms of the latch members outwardly until the lower surface of the circuit board is against the surface 116 at which time first arms 62, 62' the latch members will return towards their normal positions and the shoulders 86 will extend over portions of the circuit board adjacent to the side edges. The supports 102 provide extensive bearing surfaces for the stressed portions of the latch members. By virtue of the form of the latch members and by virtue of the provision of the support members in the latch receiving cavities, the latch members can have an extremely high retention force which is exerted through the shoulders 86 against the upper surfaces of the circuit board 4. Because of the fact that the latch members are extremely strong and exert a high retaining force on the circuit board, a large number of contact terminals can be provided in the connector assembly 2 with each terminal exerting relatively high contact forces on its associated terminal pad. The foregoing advantages are achieved in a type of connector, having circuit boards which extend at an acute angle from the connector assembly. The latch members are extremely robust and are resistant to damage as a result of careless or negligent handling by a technician installing the connectors on a circuit board 6 or during insertion of the board 4 into the connector assembly.

The convex camming surfaces 84, 84' of the latch members are advantageous in that, unlike a sheared edge, they do not score or otherwise damage the side edges 12,

12 of circuit board 4 when the circuit board is pivoted to its functional position.

The invention permits the use of stamped and formed latch members in electrical connector assemblies for double-sided printed circuit daughter boards having terminal pads on both of the surfaces thereof. The invention specifically provides relatively high normal forces on the circuit board when the daughter board is in its functional position so that the contact terminals can exert a relatively high contact force on the terminal pads of the circuit board. These advantages are achieved in connectors of a type which have the inserted circuit board extending at an acute angle when the inserted board is in its functional position.

CLAIMS:

1. An electrical connector 2 comprising an insulating housing 32 having opposite ends 28,28', a board-receiving face 24 and a mounting face 26 which is directed oppositely with respect to the board-receiving face 24, a trough-like recess 38 extending into the board-receiving face 24 and extending between the ends 28,28', each of the ends having a latch-receiving cavity 92,92' which extends into the board-receiving face 24, a stamped and formed latch member 60,60' in each of the cavities 92,92', each latch member 60,60' having first and second arms 62,64 which extend from a bight portion 66, the first arm 62 of each latch member 60,60' having shoulder means 86 which engages the board 4 after insertion and retains the board 4 in the recess 38, the connector 2 being characterized in that:

each cavity 92,92' has an integral support member 102 extending thereacross between the arms 62,64, the bight portion 66 of each latch member 60,60' being between the support member 102 and the mounting face, the support members 102 being adjacent to the bight portions 66, whereby, upon flexure of the first arms 62 towards the second arms 64 during insertion of a circuit board 4 into the recess 38, the bight portions 66 are supported by the support members 102 and the board 4 retaining effect of the latch members 60,60' is thereby enhanced.

2. An electrical connector 2 as set forth in claim 1 characterized in that each of the latch receiving cavities 92,92' extends through the housing 22 from the board-receiving face 24 to the mounting face 26, each of the support members 102 has a shoulder 86 thereon which is proximate to a cavity sidewall 104 and which is directed towards the board-receiving face 24, each latch member 60,60' has a locking ear 78 which is against its associated shoulder 86, the latch members 60,60' having

been inserted into their respective cavities 92,92' from the mounting face 26 towards the board receiving face 24, the second arms 64 being between the support members 102 and the associated sidewalls 104.

3. An electrical connector 2 as set forth in claim 2 characterized in that the bight portions 66 are arcuate and each of the support members 102 has an arcuate supporting surface 114 which is opposed to the arcuate surface of the associated bight portion 66.

4. An electrical connector 2 as set forth in claim 3 characterized in that each of the arcuate supporting surfaces 114 has a radius of curvature which is substantially equal to the radius of curvature of the associated bight portion 66, each bight portion 66 being against its associated supporting surface 114 when the first arms 62 are flexed.

5. An electrical connector 2 as set forth in claim 4 characterized in that the bight portions 66 extend through an arc of greater than 180 degrees.

6. An electrical connector 2 as set forth in claim 1 characterized in that the connector 2 is of the type which requires insertion of the board 4 into recess 38 with the board 4 at a first acute angle relative to the board receiving face 24 and which requires pivotal movement of the board 4 towards the board receiving face 24 to a functional position in which the board 4 extends at a second acute angle with respect to the board receiving face 24, the second angle being less than the first angle.

7. An electrical connector 2 as set forth in claim 6 characterized in that each first latch arm 62 has an adjacent portion 72 which is adjacent to the bight portion 66, an intermediate transition portion 74 and an end portion 76, and the intermediate portion 74 has a board engaging shoulder 86 which is directed towards the board receiving face 24.

8. An electrical connector 2 as set forth in claim 7 characterized in that the end portion 76 has a board engaging camming surface 84 which extends from the shoulder 86, the camming surface 84 being inclined away from the shoulder 86 and divergently with respect to the ends 28,28' of the housing 22.

9. An electrical connector 2 as set forth in claim 8 characterized in that the end portion 76 of each first latch arm 62 comprises first and second plane surfaces 80,82 which extend convergently of each other and which are joined by a convex curved surface 84, the camming surface 84 being the convex curved surface 84.

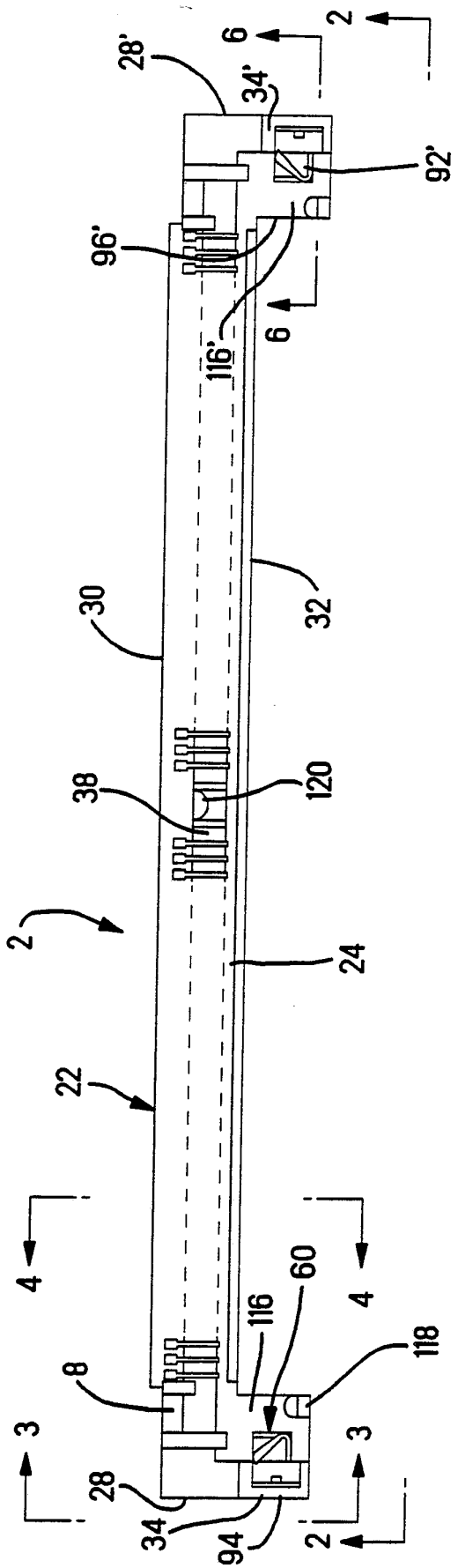

FIG. 1

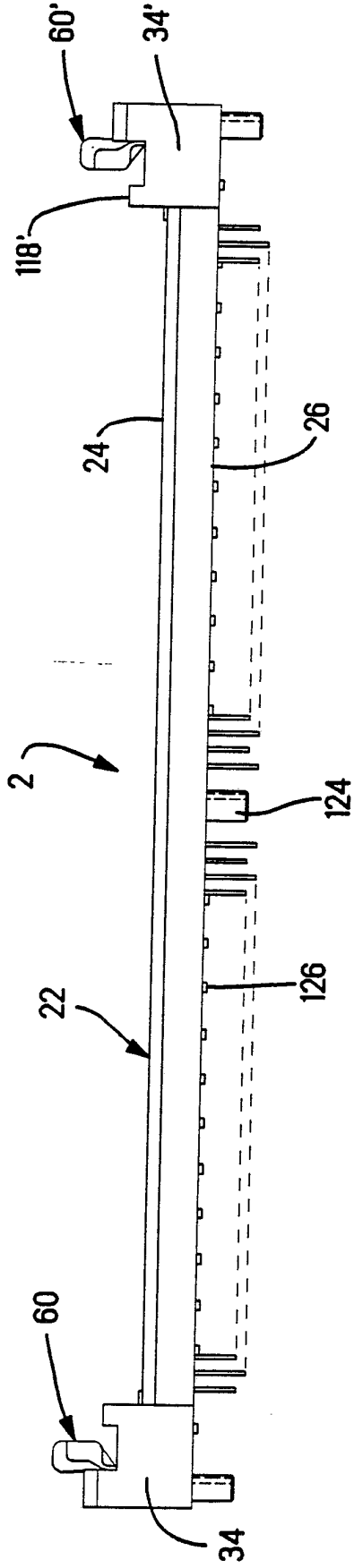

FIG. 2

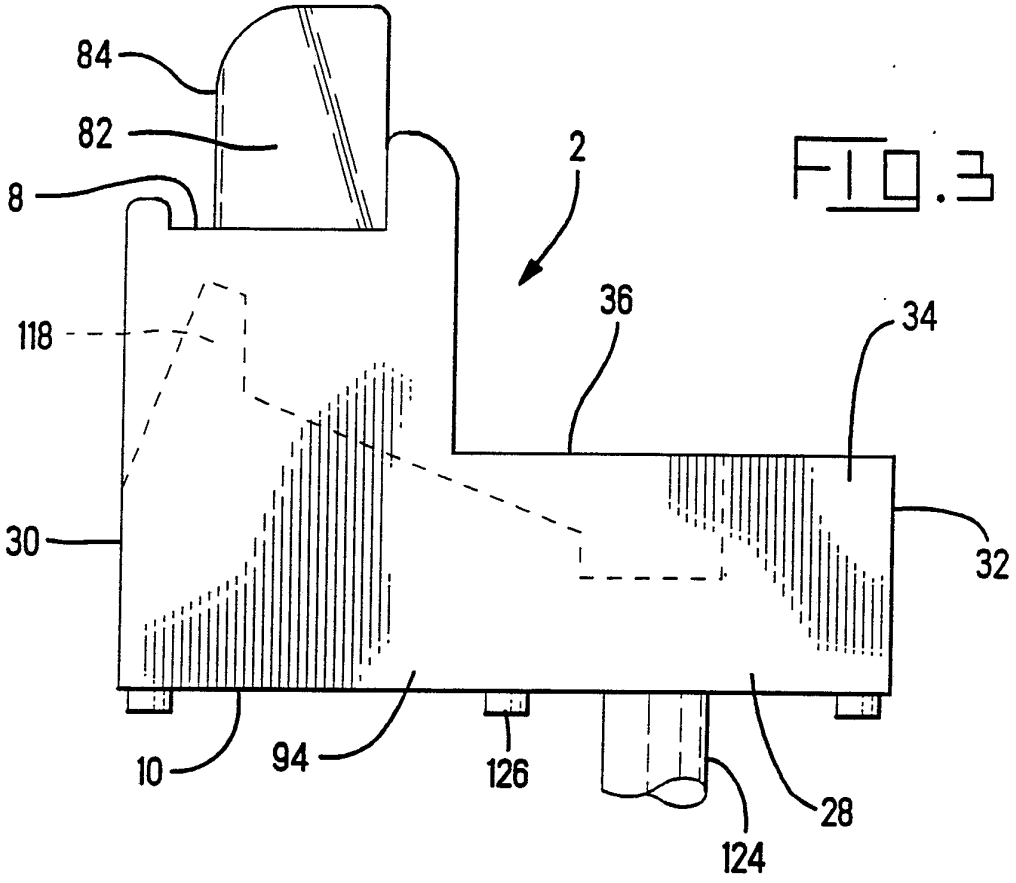

FIG. 3

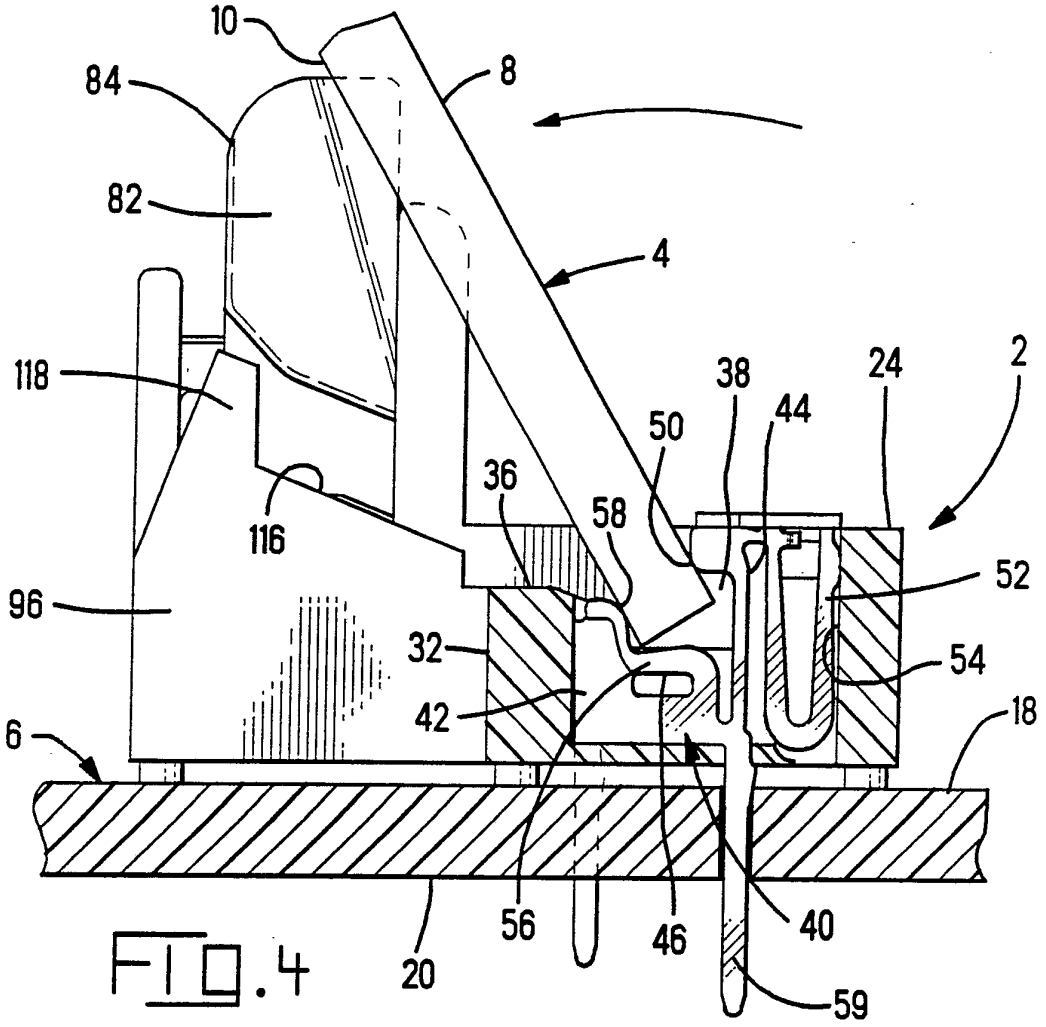
10
84
8
82
4
118
38
24
2
50
44
36
58
116
52
96
32
54
42
18
6
56
46
40
20
59

FIG. 4

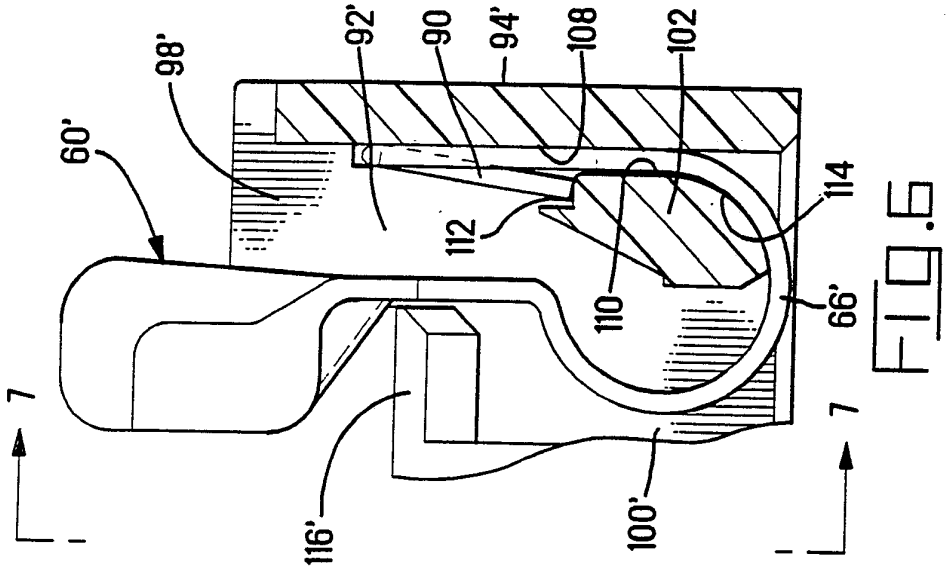
98'
92'
90
94'
108
102
60'
112
114
110
66'
7
7
116'
100'

FIG.6

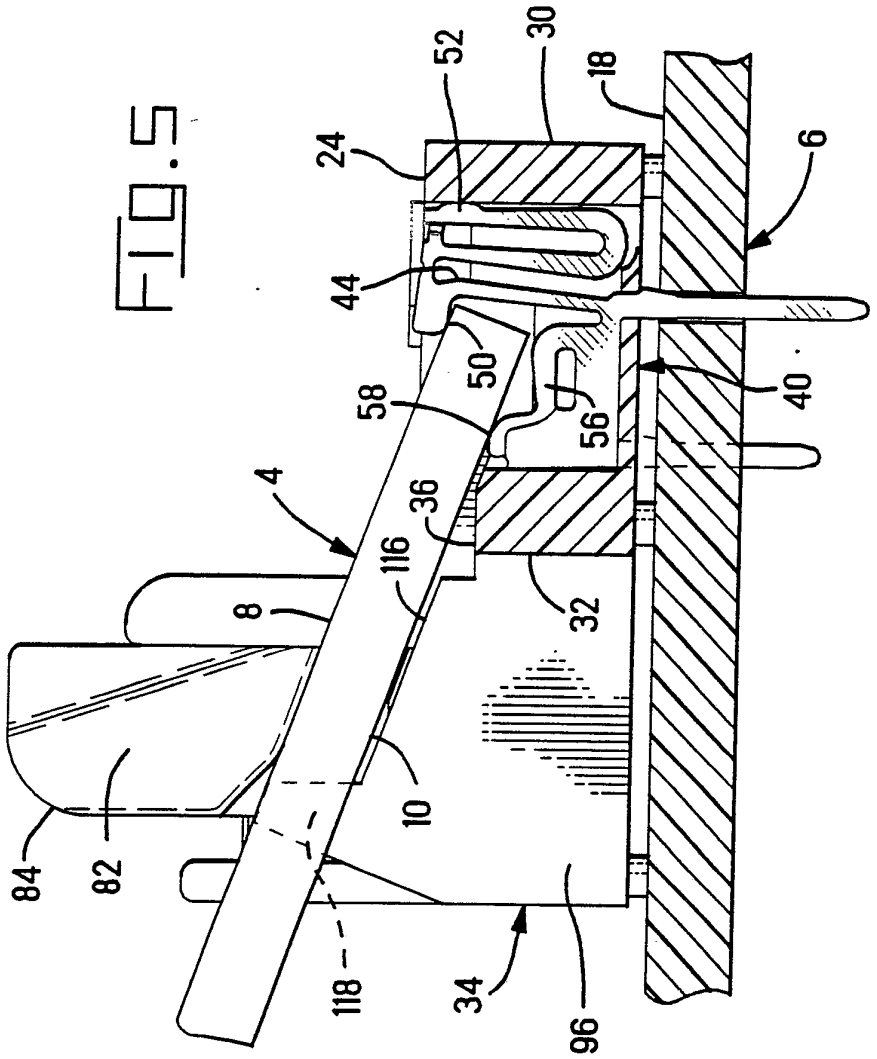
52
30
18
24
6
44
50
58
56
40
4
36
116
8
32
10
84
82
118
34
96

FIG.5

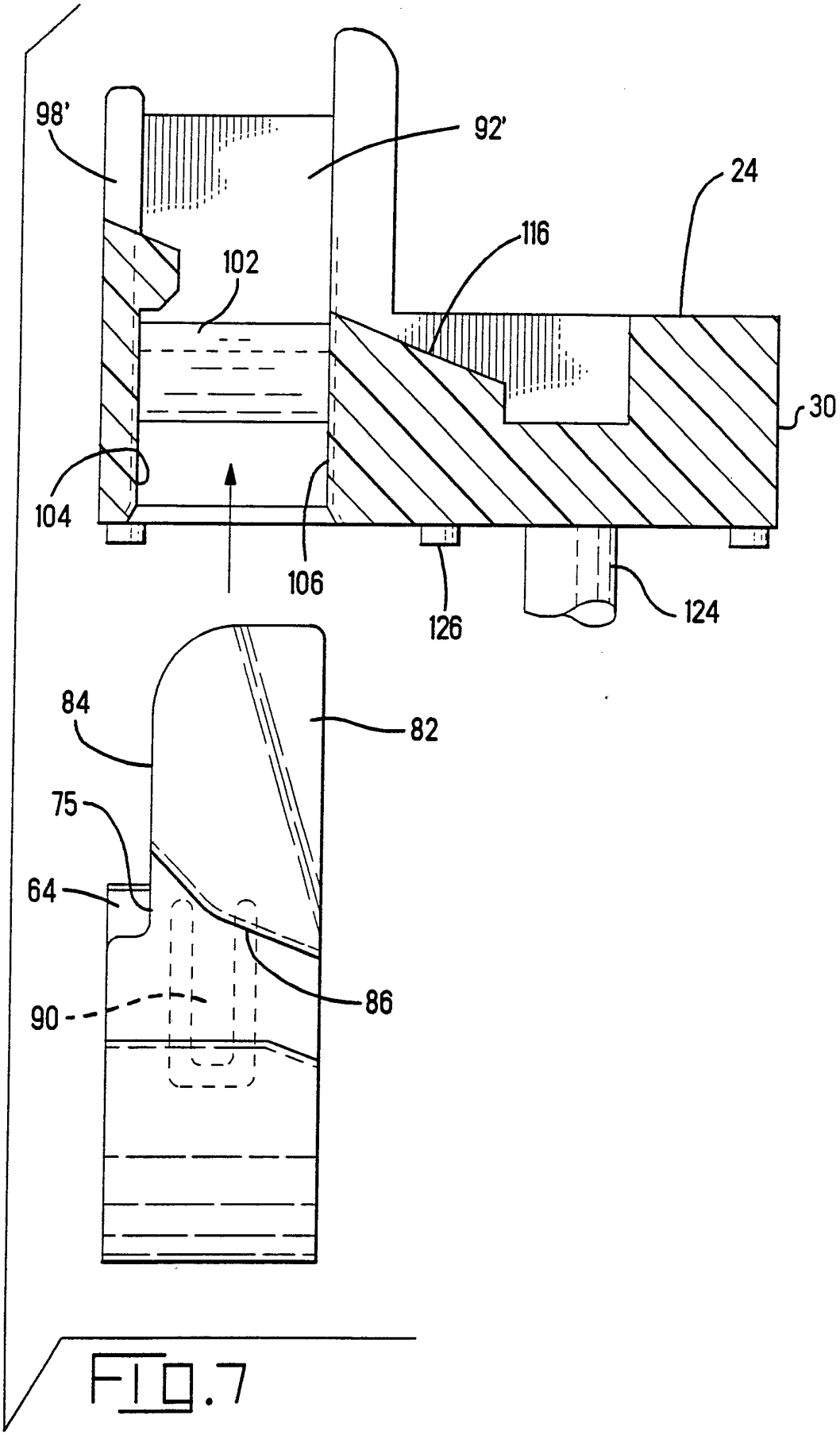

FIG.7

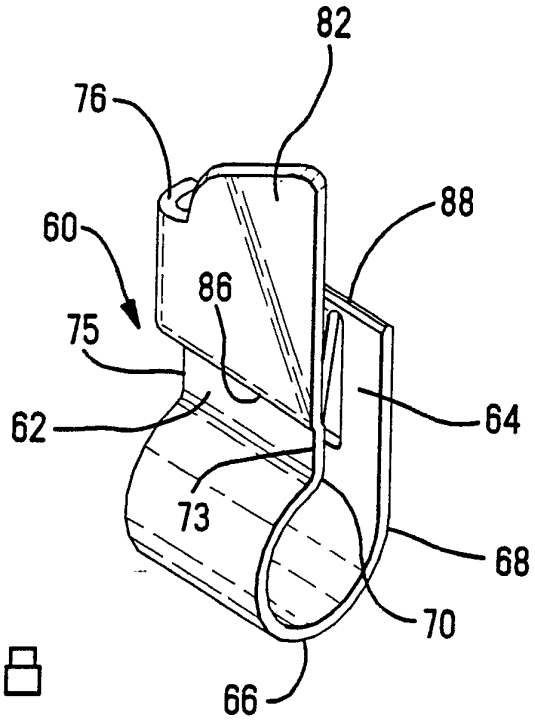

FIG.8

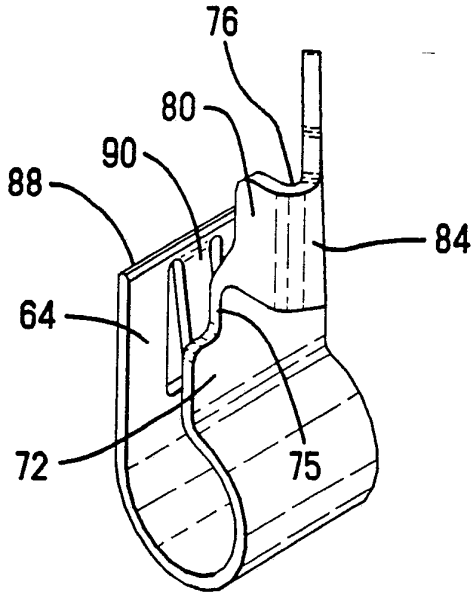

FIG.9

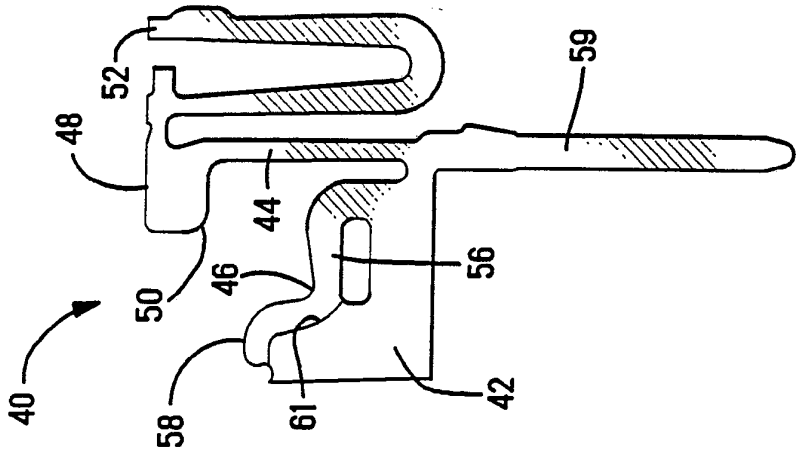

FIG. 13

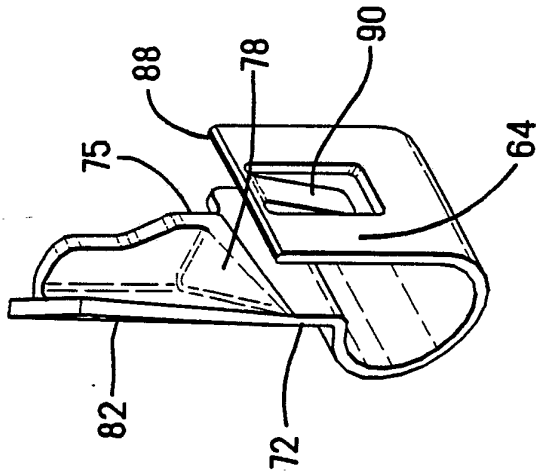

FIG. 11

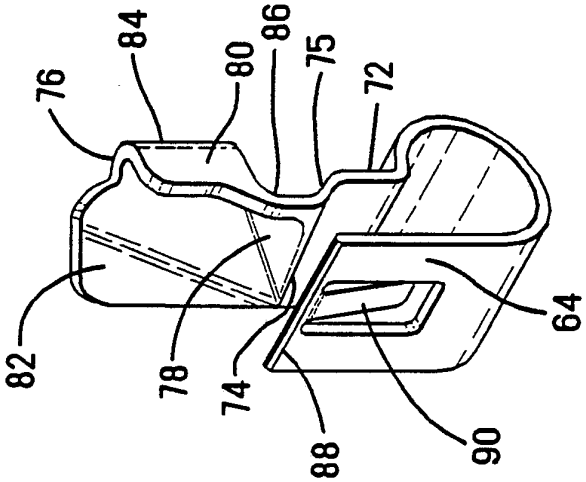

FIG. 10

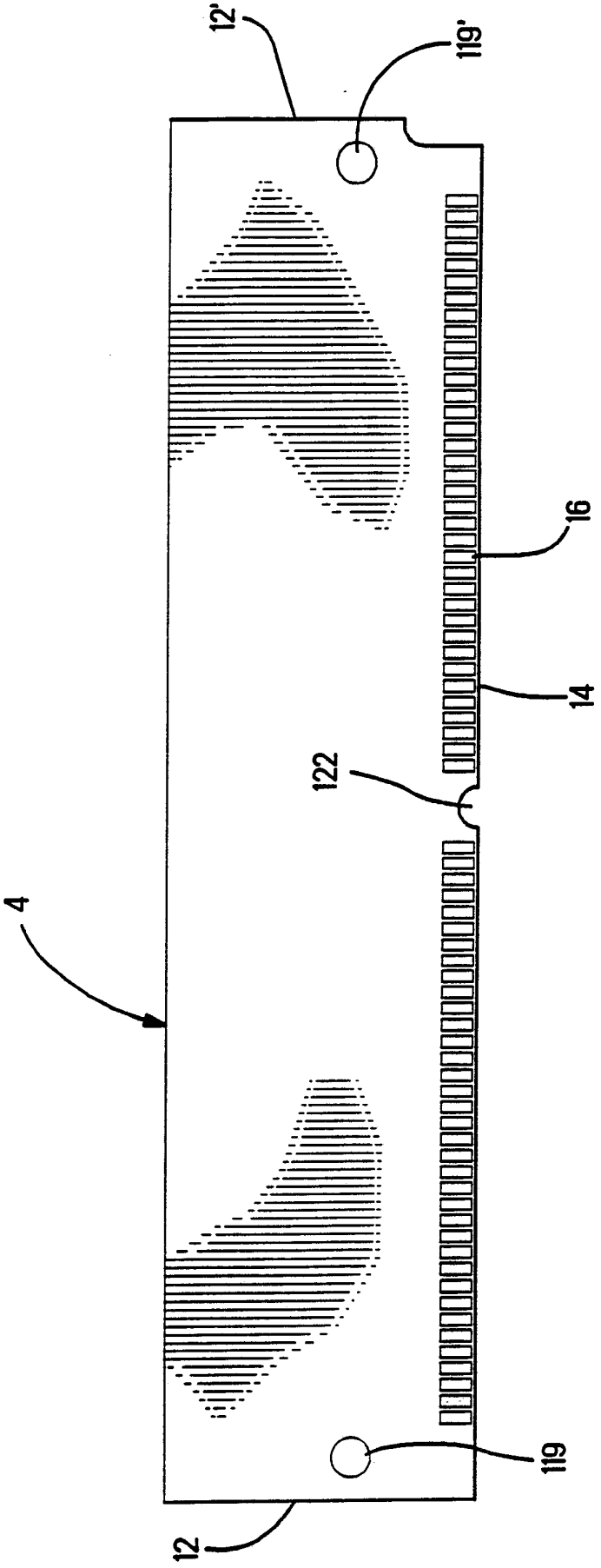

FIG. 12

INTERNATIONAL SEARCH REPORT

International Application No PCT/US 91/03419

I. CLASSIFICATION OF SUBJECT MATTER (if several classification symbols apply, indicate all)[6]

According to International Patent Classification (IPC) or to both National Classification and IPC

Int.Cl. : H01R23/68 ; H01R23/70

II. FIELDS SEARCHED

Minimum Documentation Searched[7]

Classification System	Classification Symbols
Int.Cl. 5	H01R

Documentation Searched other than Minimum Documentation to the Extent that such Documents are Included in the Fields Searched[8]

III. DOCUMENTS CONSIDERED TO BE RELEVANT[9]

Category °	Citation of Document,[11] with indication, where appropriate, of the relevant passages[12]	Relevant to Claim No.[13]
A,P	WO,A,9104592 (AMP INCORPORATED) 04 April 1991 see page 1, line 1 - page 2, line 18; figures 1-3, 16-19	1-9
A,P	US,A,4995825 (AMP INCORPORATED) 26 February 1991 see column 3, lines 15 - 39; figures 14-18	1-9
A	US,A,4709302 (THERMALLOY INCORPORATED) 24 November 1987 see column 4, line 13 - column 5, line 6; figures 2a, 2b, 12	1-5
A	US,A,4621885 (AMP INCORPORATED) 11 November 1986 see column 2, lines 24 - 33; figure 1	1-5, 7
A	US,A,3848952 (AMP INCORPORATED) 19 November 1974 see column 3, lines 29 - 40; figure 2	1, 6

-/--

° Special categories of cited documents :[10]

"A" document defining the general state of the art which is not considered to be of particular relevance

"E" earlier document but published on or after the international filing date

"L" document which may throw doubts on priority claim(s) or which is cited to establish the publication date of another citation or other special reason (as specified)

"O" document referring to an oral disclosure, use, exhibition or other means

"P" document published prior to the international filing date but later than the priority date claimed

"T" later document published after the international filing date or priority date and not in conflict with the application but cited to understand the principle or theory underlying the invention

"X" document of particular relevance; the claimed invention cannot be considered novel or cannot be considered to involve an inventive step

"Y" document of particular relevance; the claimed invention cannot be considered to involve an inventive step when the document is combined with one or more other such documents, such combination being obvious to a person skilled in the art.

"&" document member of the same patent family

IV. CERTIFICATION

Date of the Actual Completion of the International Search	Date of Mailing of this International Search Report
26 AUGUST 1991	23. 09. 91
International Searching Authority	**Signature of Authorized Officer**
EUROPEAN PATENT OFFICE	CRIQUI J.J.

III. DOCUMENTS CONSIDERED TO BE RELEVANT (CONTINUED FROM THE SECOND SHEET)

Category °	Citation of Document, with indication, where appropriate, of the relevant passages	Relevant to Claim No.
A	ELECTRONIC PACKAGING AND PRODUCTION. 02 March 1990, NEWTON, MASSACHUSETT pages 14 - 15; Ron Schelmetic: "Standard connectors changing with application needs." see the whole document ---	1-9

ANNEX TO THE INTERNATIONAL SEARCH REPORT ON INTERNATIONAL PATENT APPLICATION NO.

US9103419
SA 48044

This annex lists the patent family members relating to the patent documents cited in the above-mentioned international search report. The members are as contained in the European Patent Office EDP file on
The European Patent Office is in no way liable for these particulars which are merely given for the purpose of information. 26/08/91

Patent document cited in search report	Publication date	Patent family member(s)	Publication date
WO-A-9104592	04-04-91	JP-A- 3108286	08-05-91
US-A-4995825	26-02-91	None	
US-A-4709302	24-11-87	GB-A,B 2198889	22-06-88
		JP-A- 63164347	07-07-88
US-A-4621885	11-11-86	EP-A- 0239582	07-10-87
		JP-T- 63501324	19-05-88
		WO-A- 8701871	26-03-87
		US-A- 4693533	15-09-87
US-A-3848952	19-11-74	AU-A- 7123874	15-01-76
		BE-A- 818100	27-01-75
		CH-A- 571777	15-01-76
		DE-A- 2434628	13-02-75
		FR-A,B 2239074	21-02-75
		JP-A- 50033483	31-03-75
		NL-A- 7409656	29-01-75
		SE-A- 7409660	28-01-75