US 20070167981A1

(19) **United States**

(12) **Patent Application Publication** (10) **Pub. No.: US 2007/0167981 A1**

Opolski et al. (43) **Pub. Date: Jul. 19, 2007**

(54) **CATCH MEMBERS FOR OCCLUDER DEVICES**

(75) Inventors: **Steven W. Opolski**, Carlisle, MA (US); **Sean T. Forde**, Watertown, MA (US); **Stephanie M. Kladakis**, Watertown, MA (US); **David J. Callaghan**, Boston, MA (US)

Correspondence Address:
WILMER CUTLER PICKERING HALE AND DORR LLP
60 STATE STREET
BOSTON, MA 02109 (US)

(73) Assignee: **NMT Medical, Inc.**, Boston, MA (US)

(21) Appl. No.: **11/644,373**

(22) Filed: **Dec. 21, 2006**

Related U.S. Application Data

(60) Provisional application No. 60/753,681, filed on Dec. 22, 2005.

Publication Classification

(51) **Int. Cl.**
A61B 17/08 (2006.01)

(52) **U.S. Cl.** **606/213**

(57) **ABSTRACT**

Devices and techniques for modifying and maintaining a configuration of an occlusion device for the closure of physical anomalies, such as an atrial septal defect, a patent foramen ovale (PFO), and other septal and vascular defects are described. The devices and techniques relate particularly to, but are not limited to, modifying and maintaining a configuration of a PFO occluder made from a polymer tube. The proximal portion of a catch member may be provided with one or more protrusions, or arms, or bump or other raised element for securing the occluder in a partial or fully deployed configuration, either temporarily or permanently.

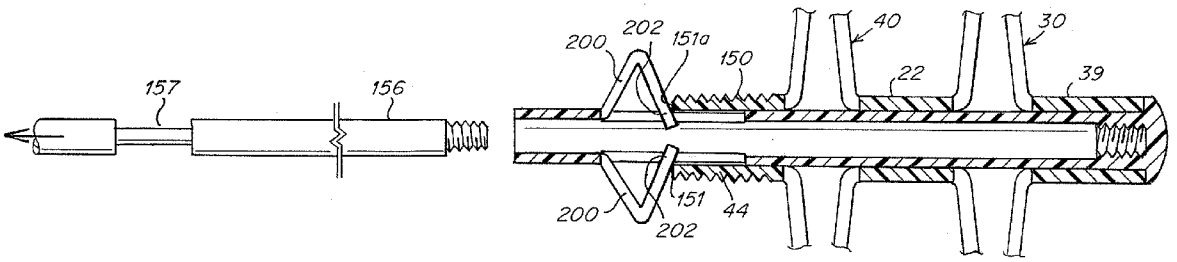

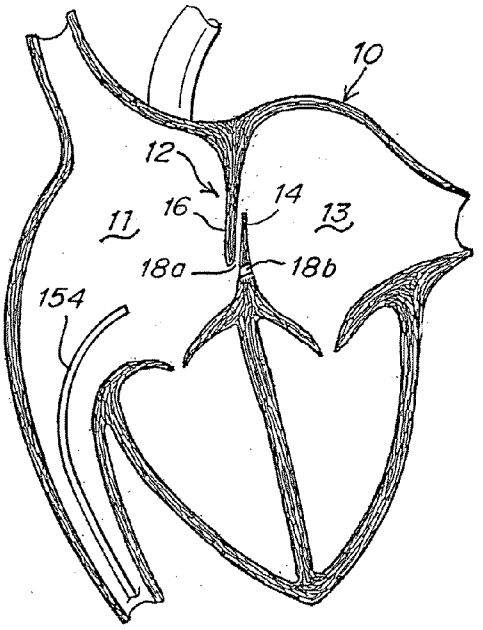

Fig. 1

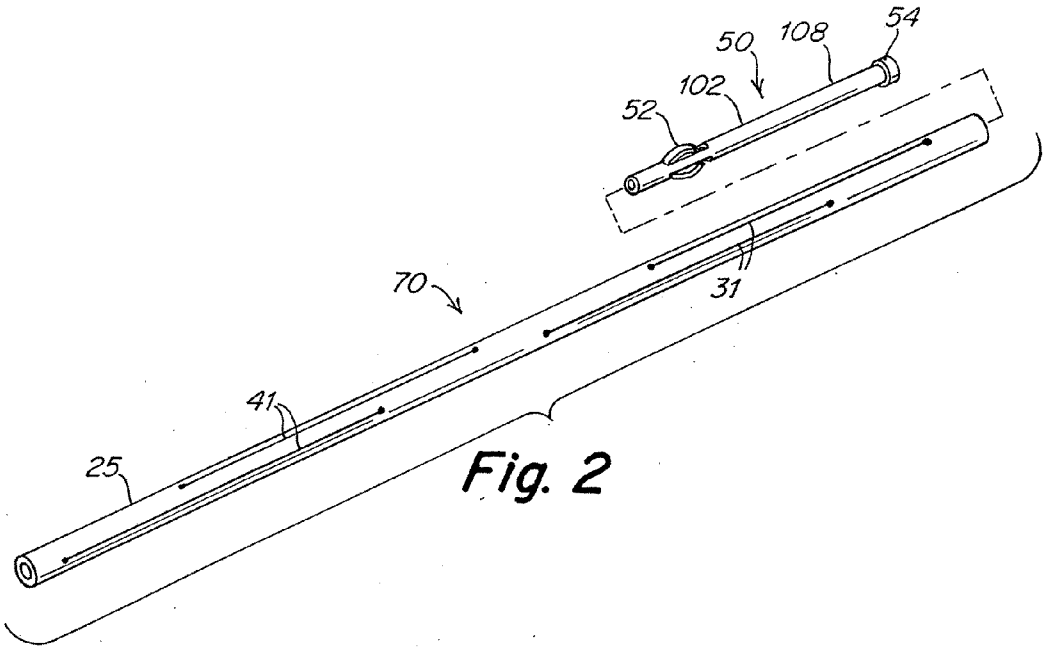

Fig. 2

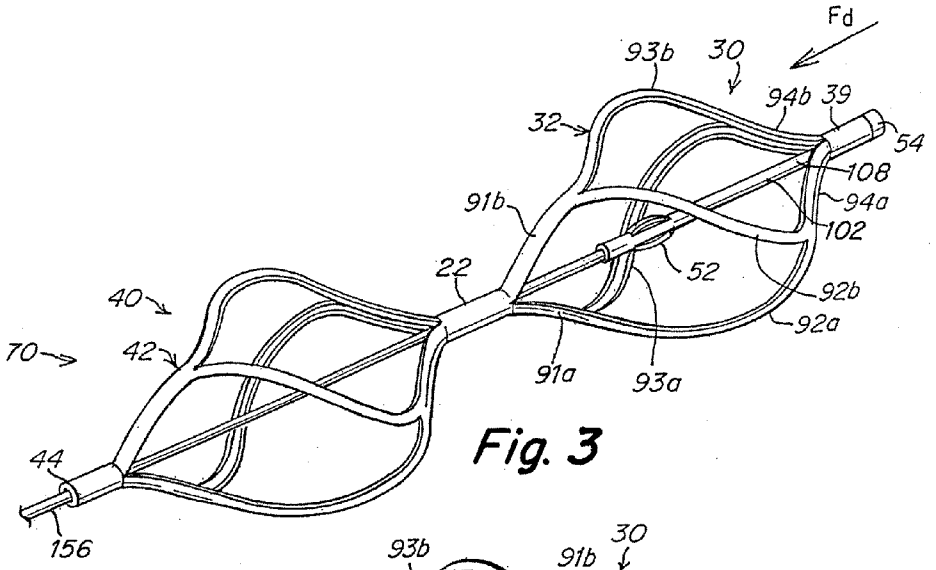

Fig. 3

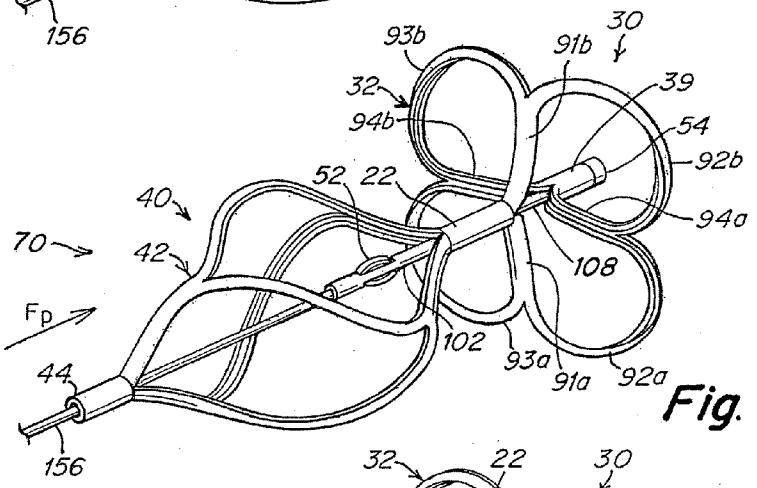

Fig. 4

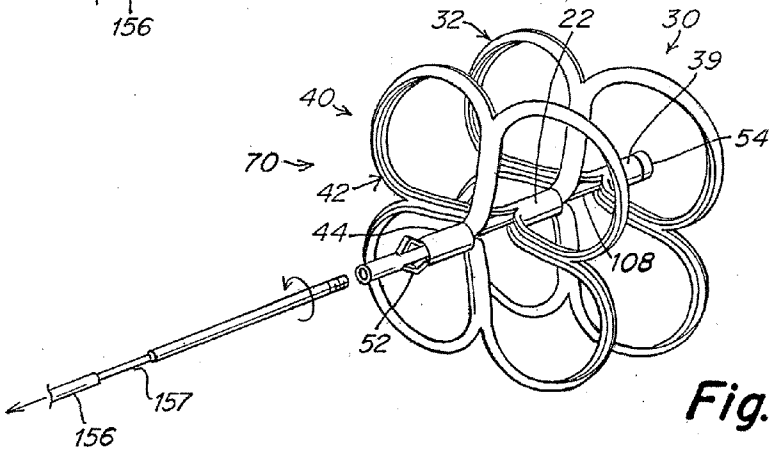

Fig. 5

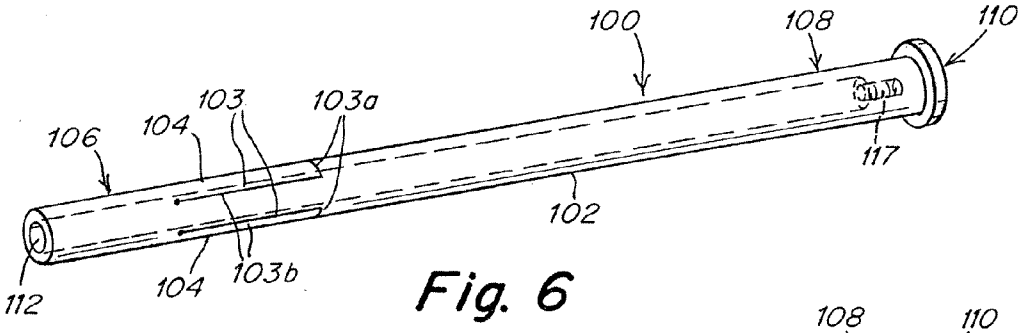

Fig. 6

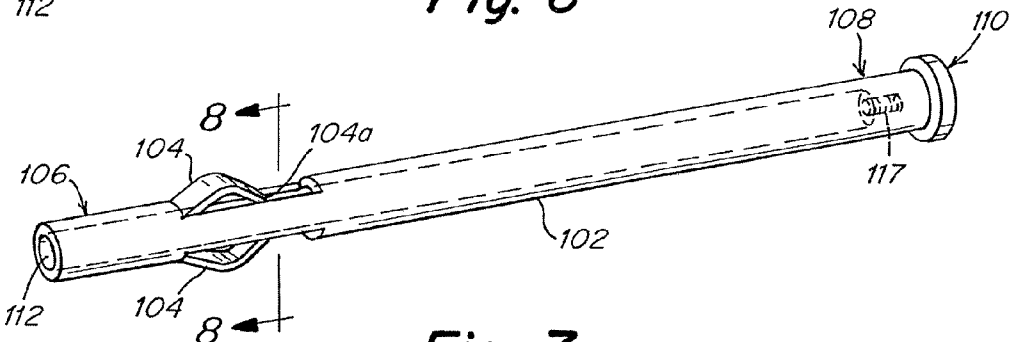

Fig. 7

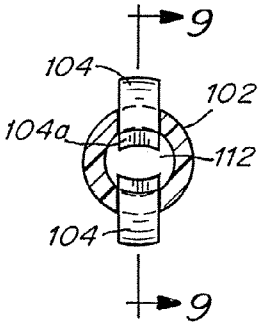

Fig. 8

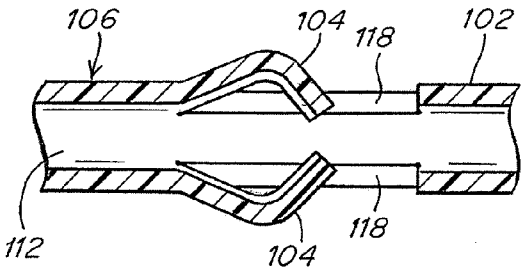

Fig. 9

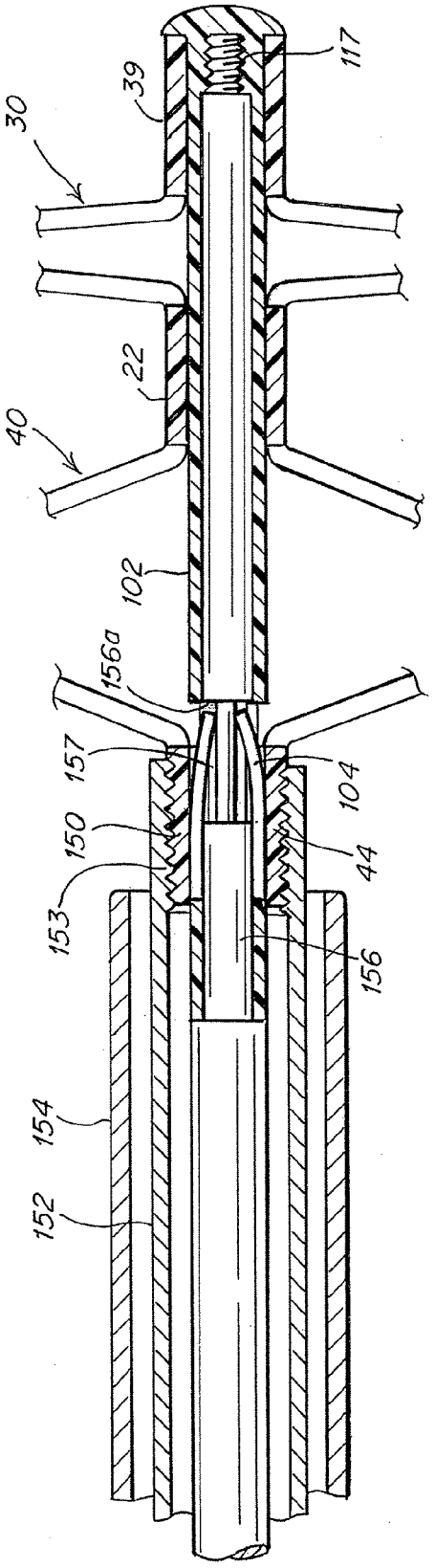
30
39
117
22
40
102
156a
157
150
153
104
44
156
154
152

Fig. 10

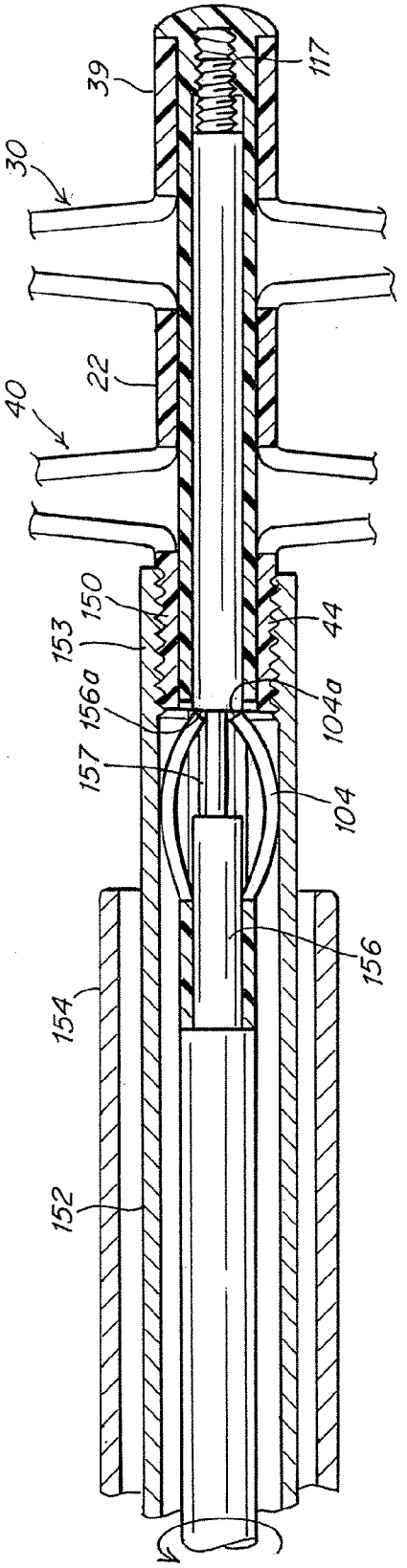
30
39
117
22
40
153
150
44
156a
104a
157
104
156
154
152

Fig. 11

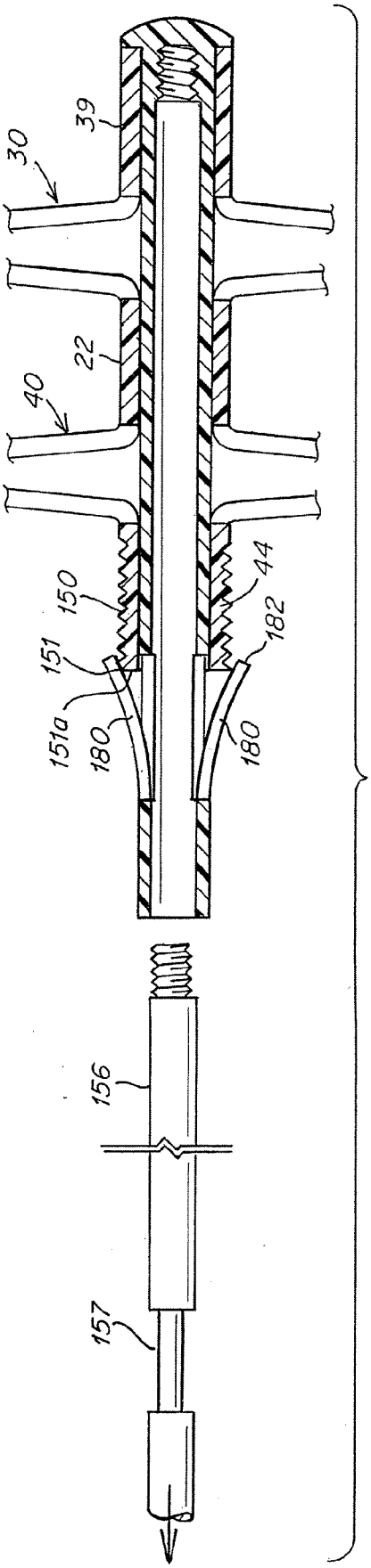

Fig. 12A

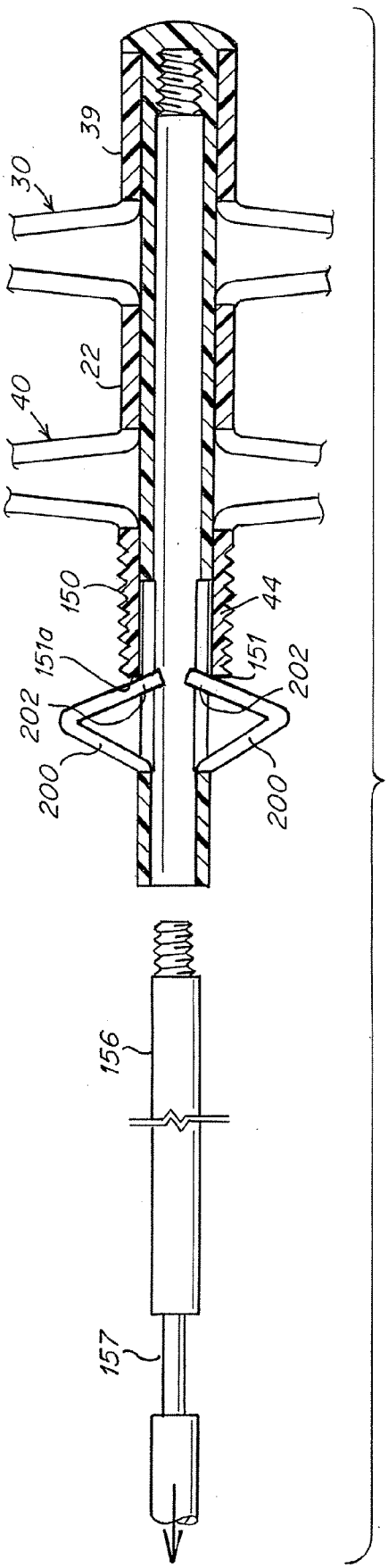

Fig. 12B

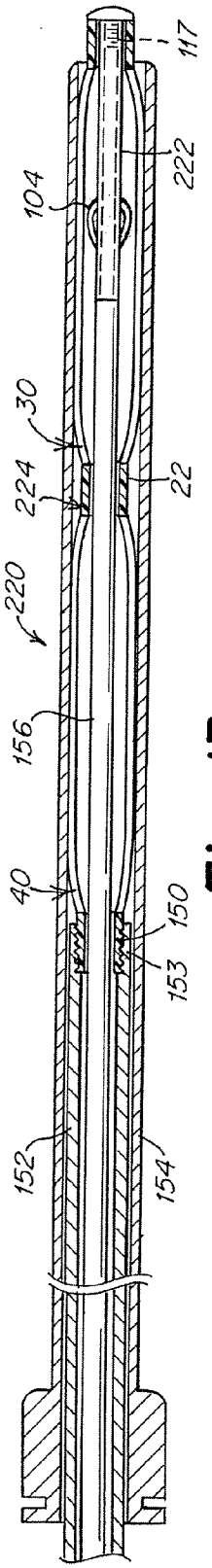
117
222
104
30
224
22
220
156
40
150
153
152
154

Fig. 13

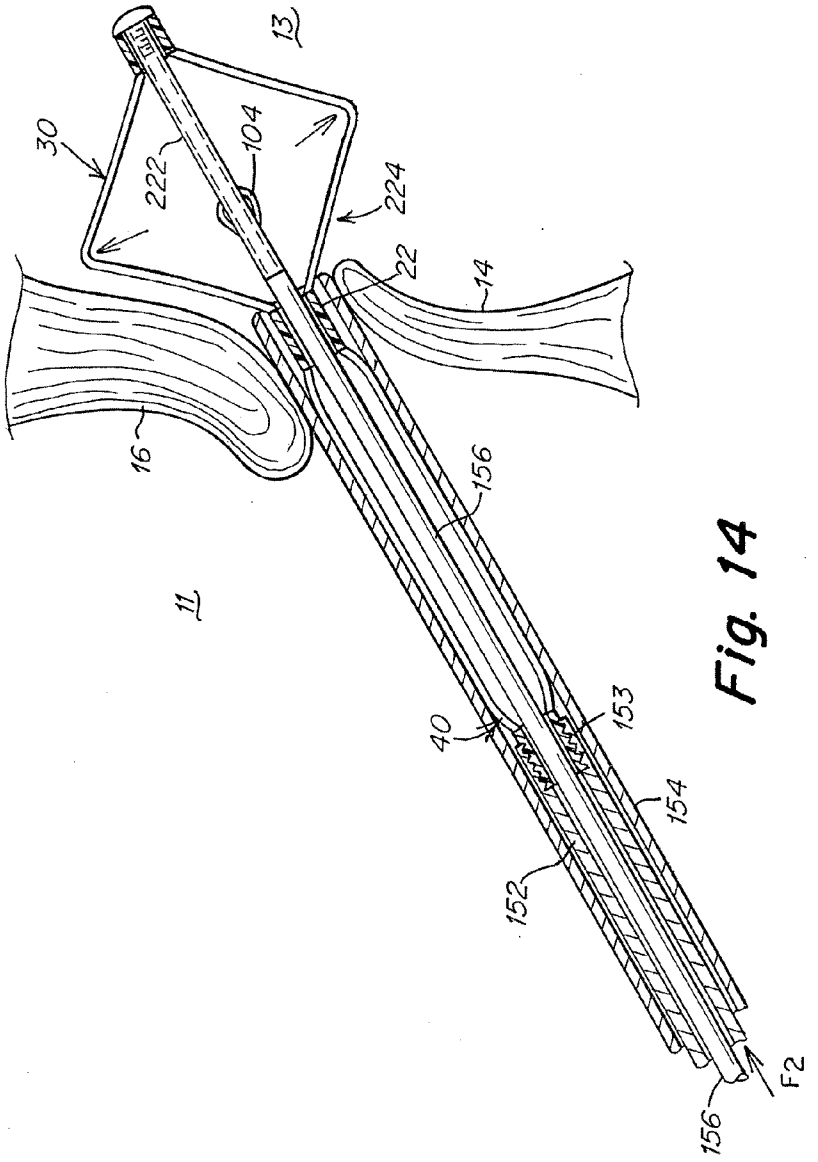
13
30
222
104
224
22
14
16
156
11
40
153
154
152
F2
156

Fig. 14

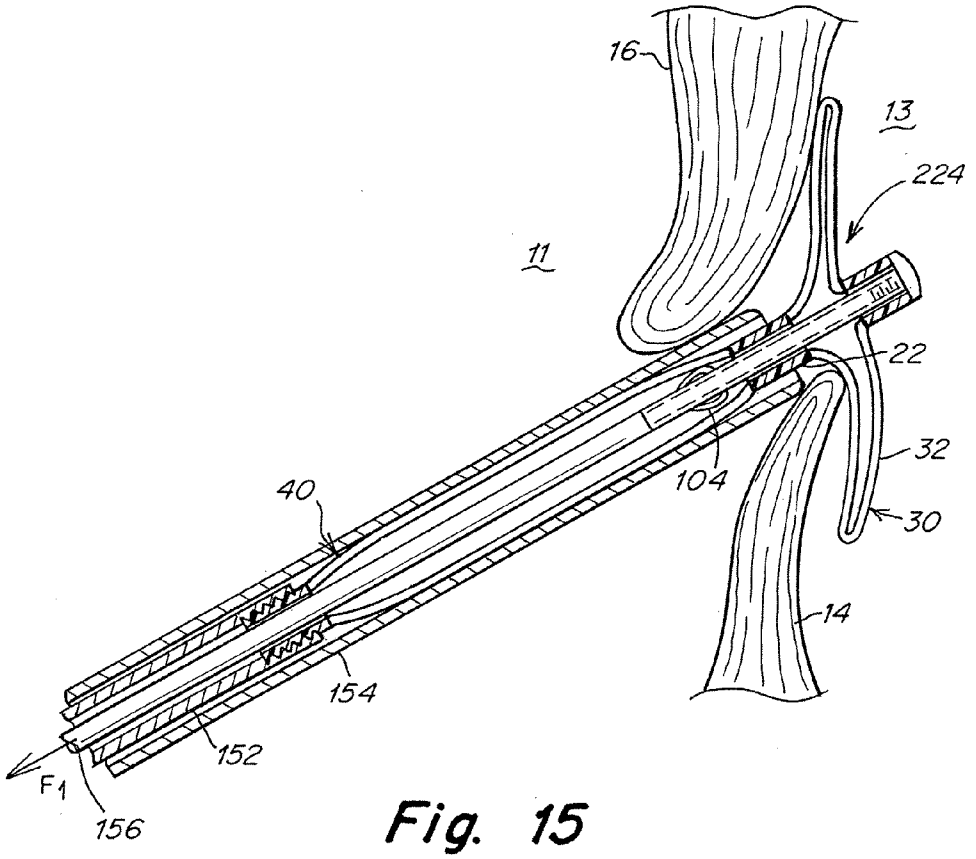
16
13
224
11
22
32
104
40
30
14
154
152
F1
156

Fig. 15

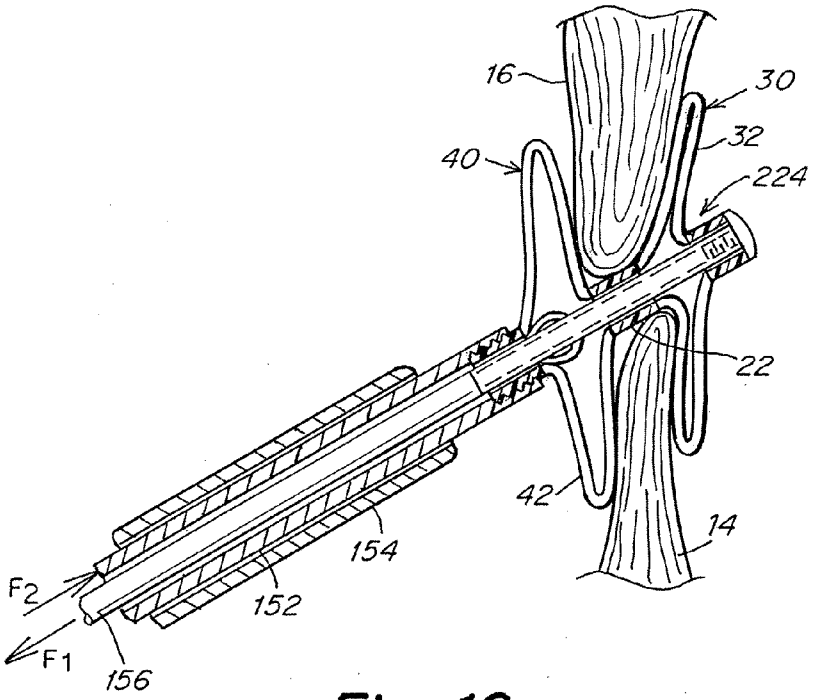
16
30
32
40
224
22
42
14
154
F2
152
F1
156

Fig. 16

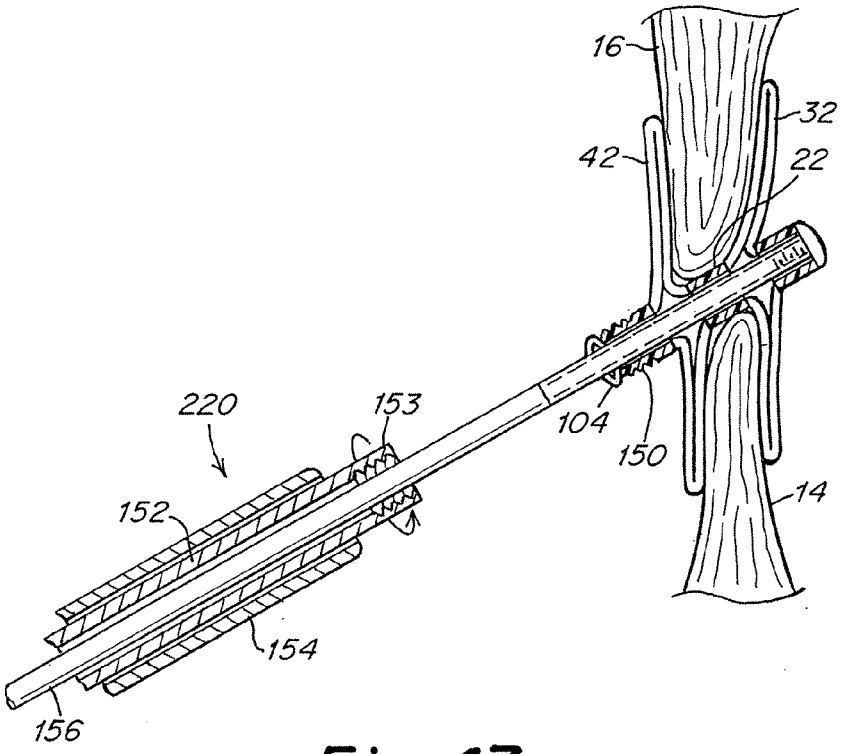
16
32
42
22
220
153
104
150
152
14
154
156

Fig. 17

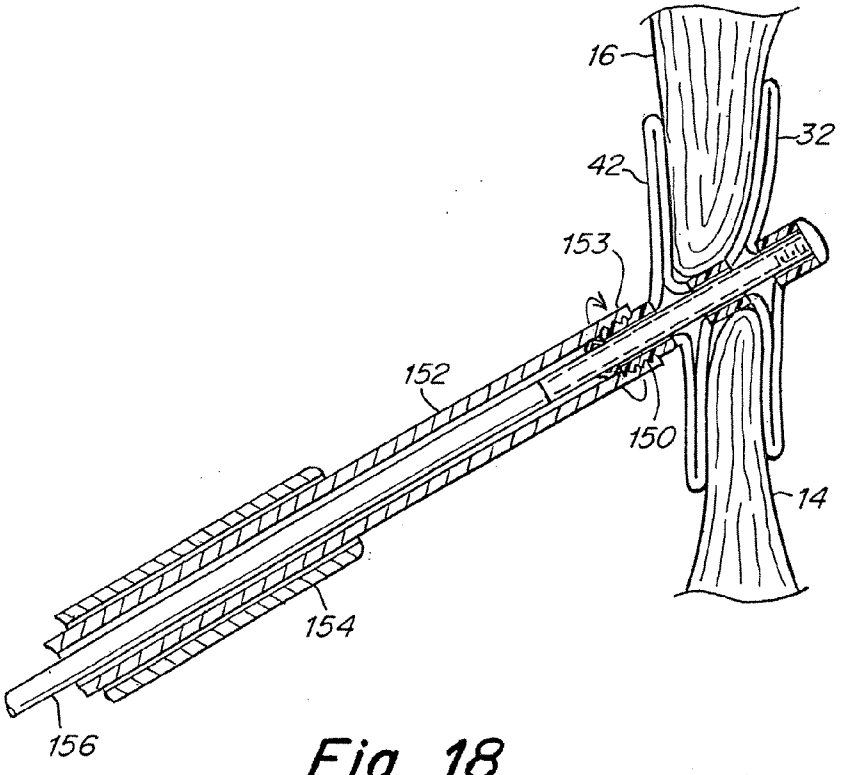
16
32
42
153
152
150
14
154
156

Fig. 18

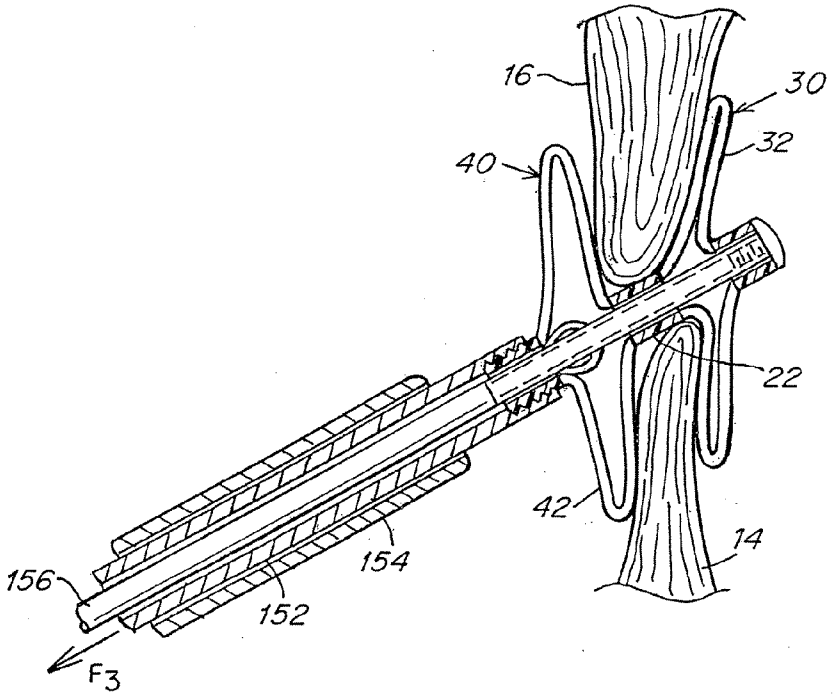
16
30
32
40
22
42
14
154
156
152
F3

Fig. 19

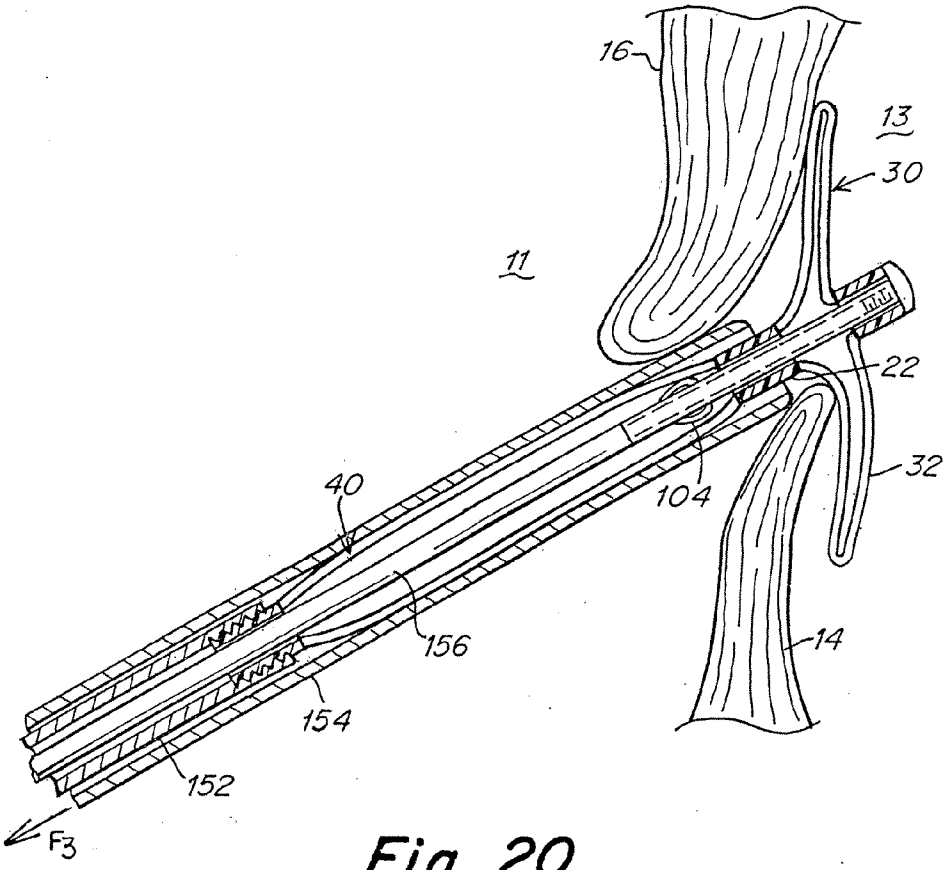
16
13
30
11
22
32
40
104
156
14
154
152
F3

Fig. 20

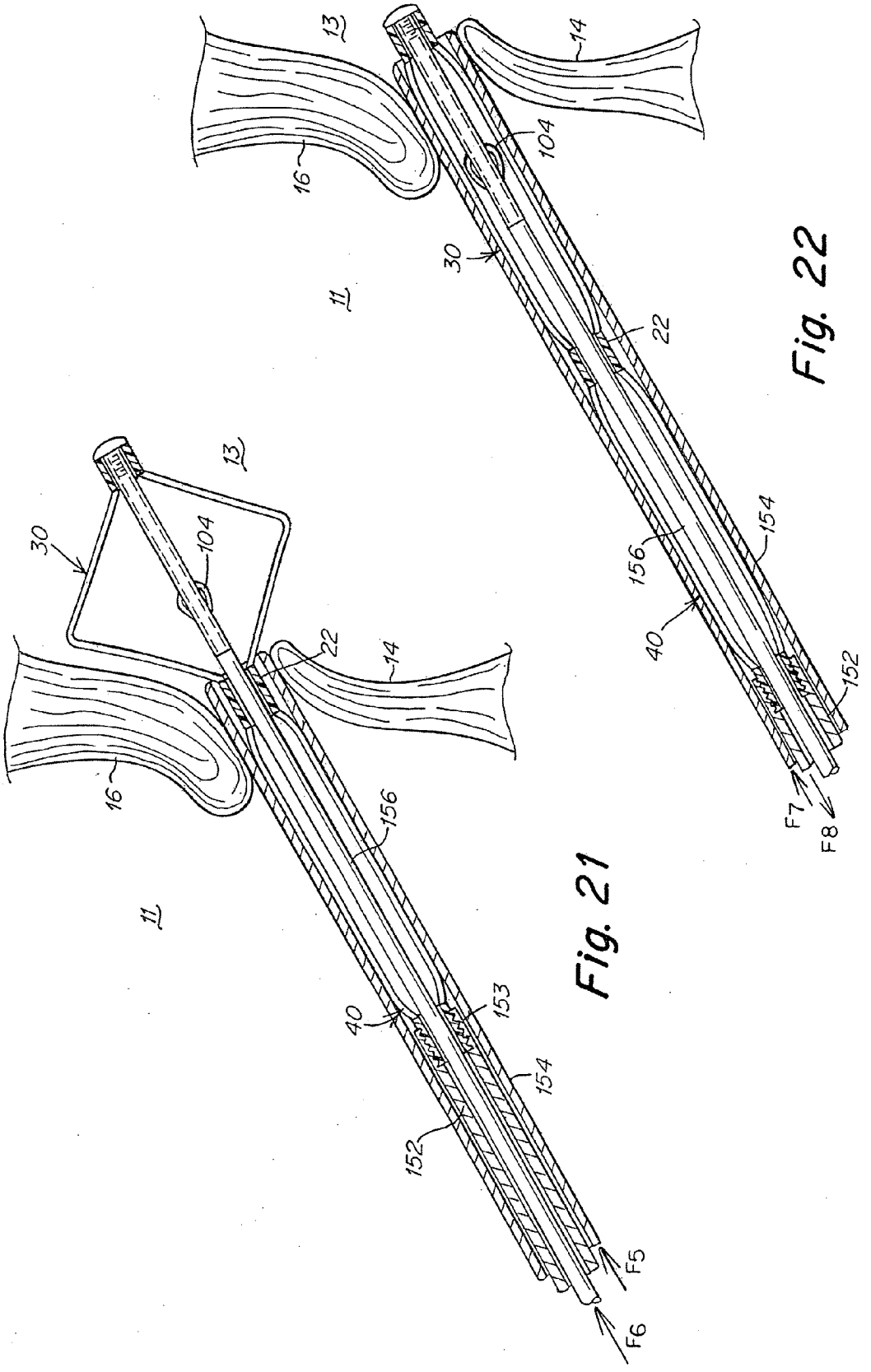

Fig. 22

Fig. 21

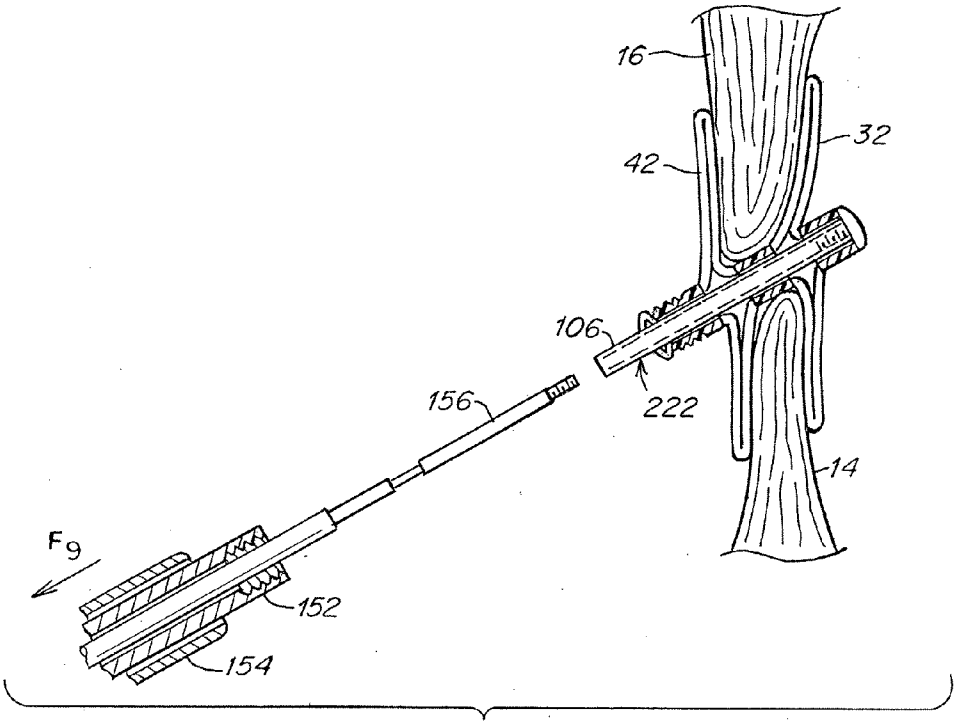

Fig. 23

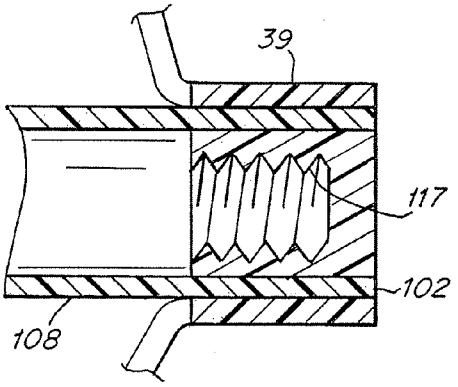

Fig. 24

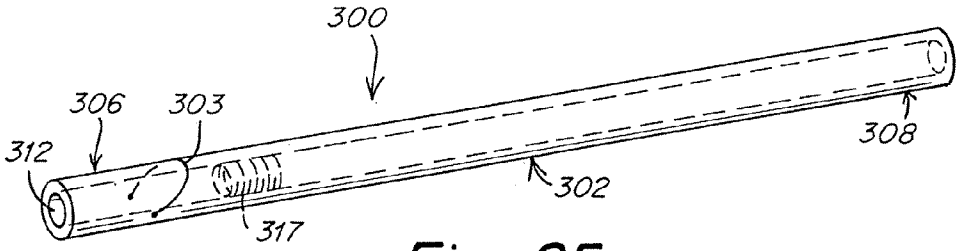

Fig. 25

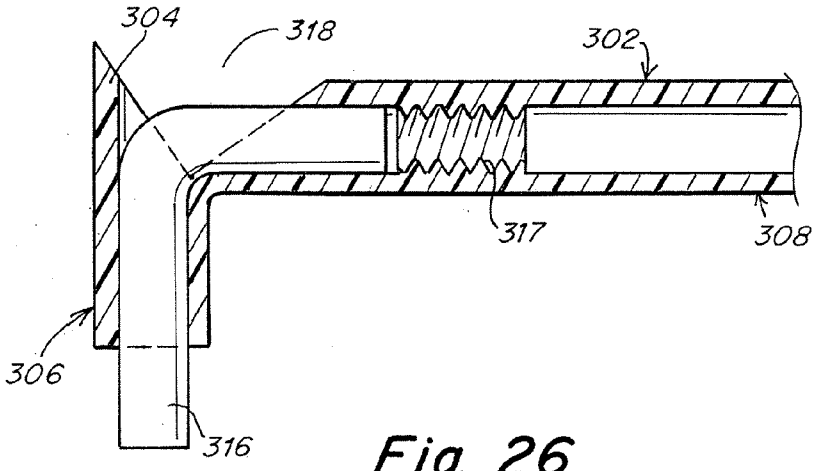

Fig. 26

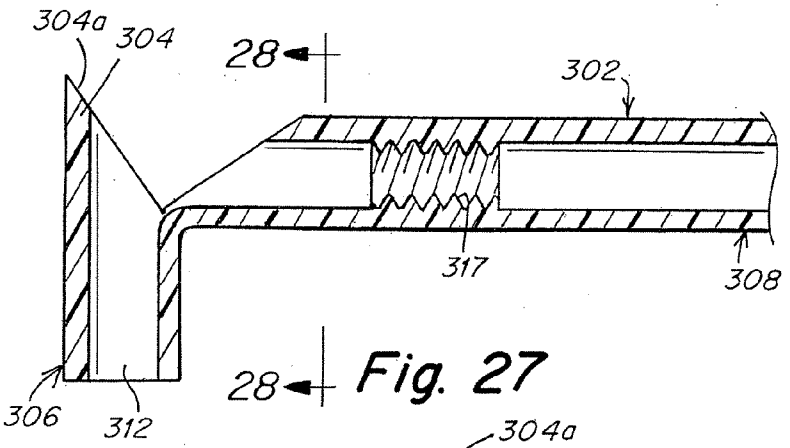

Fig. 27

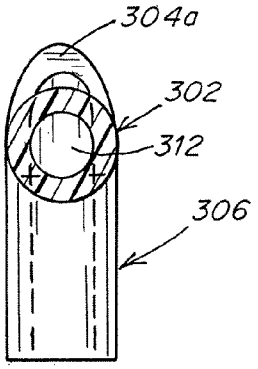

Fig. 28

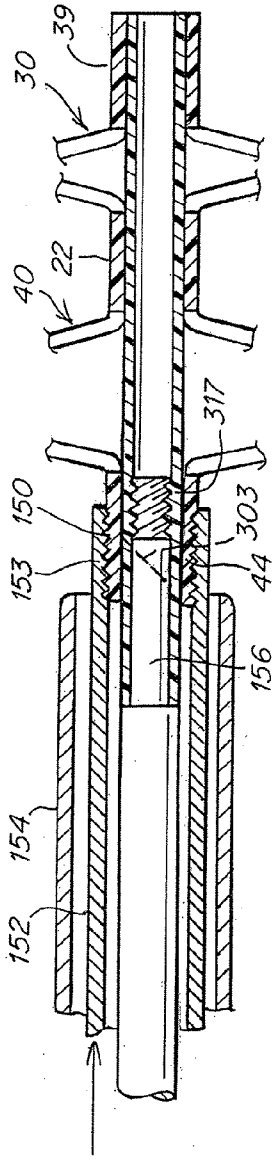

Fig. 29

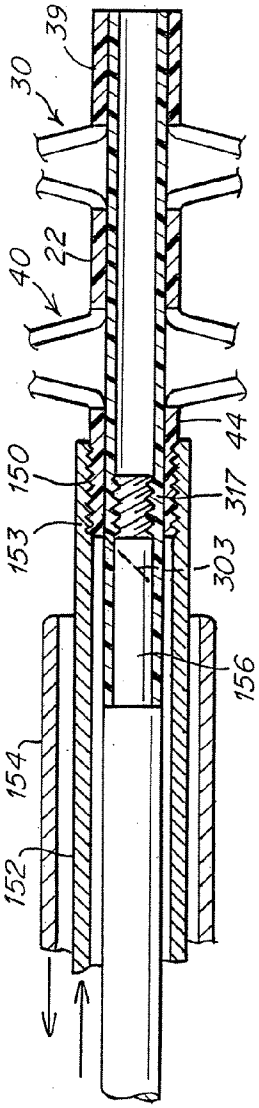

Fig. 30

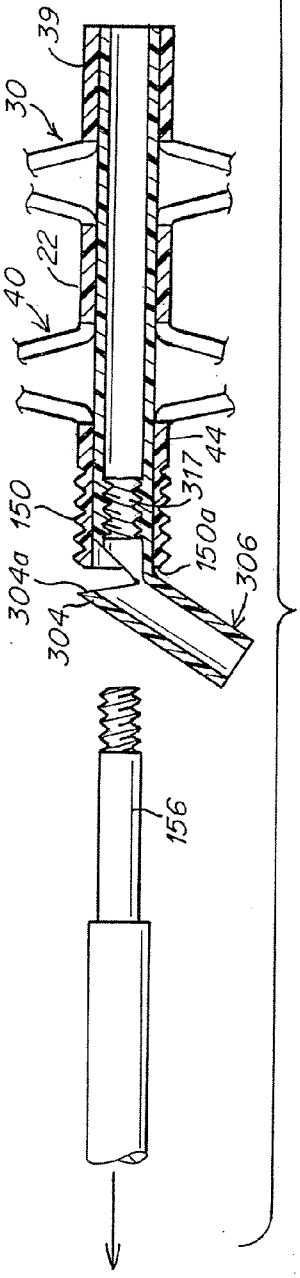

Fig. 31

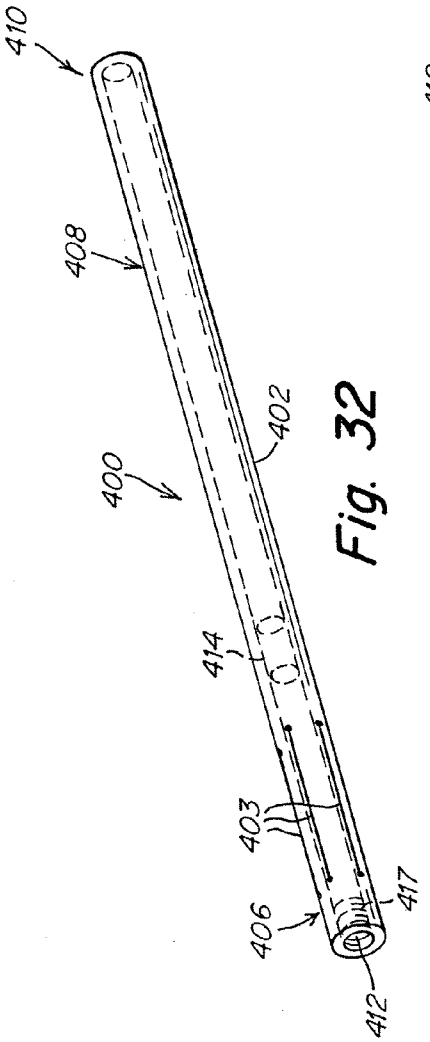

Fig. 32

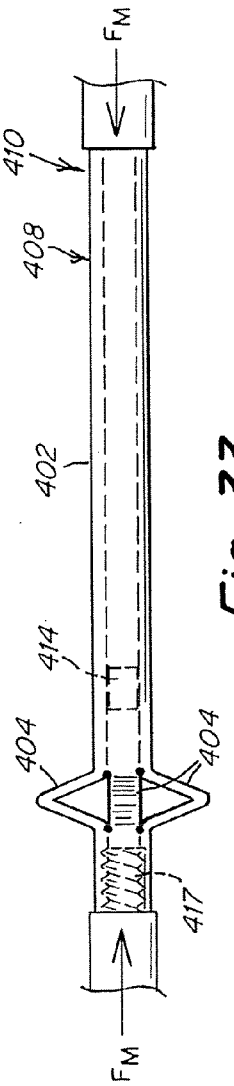

Fig. 33

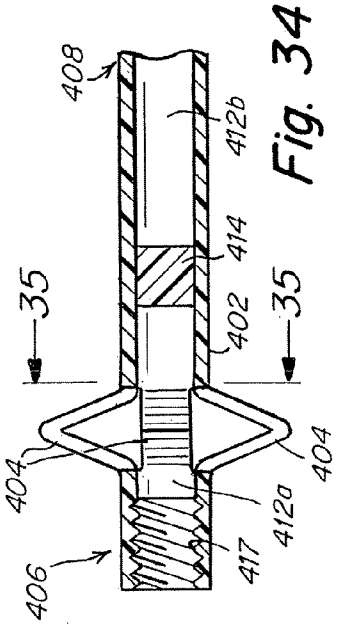

Fig. 34

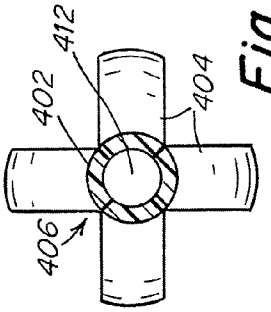

Fig. 35

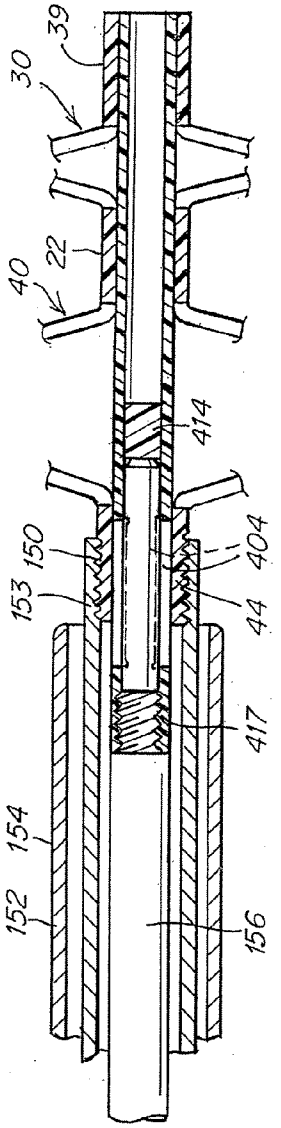

Fig. 36

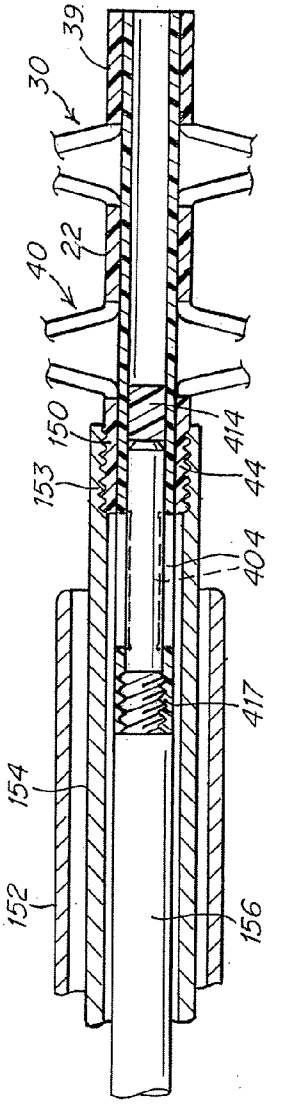

Fig. 37

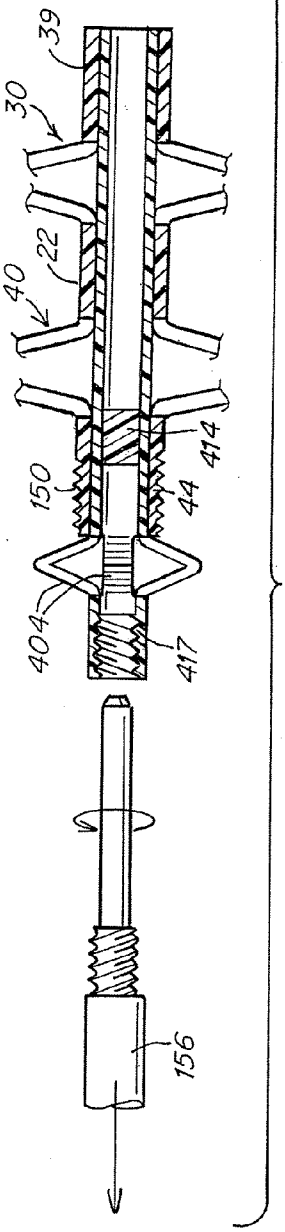

Fig. 38

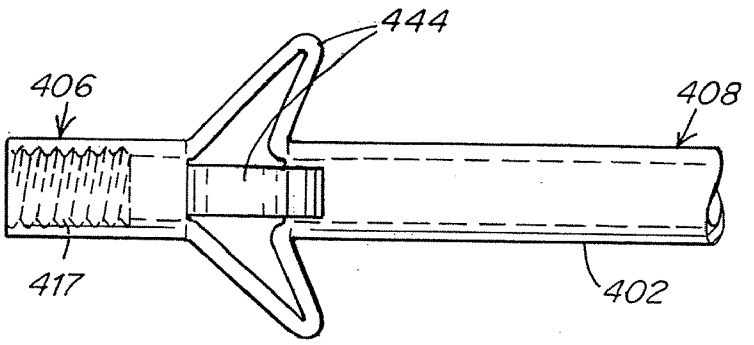

Fig. 39

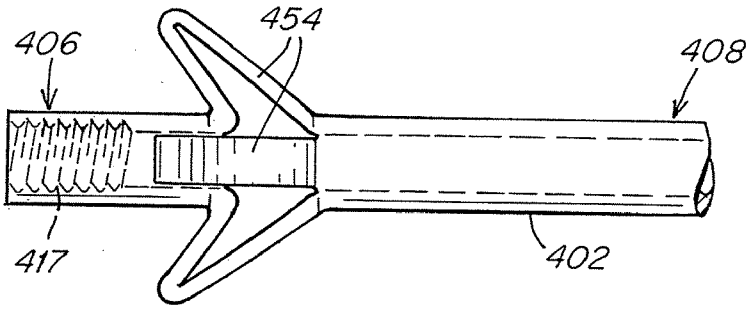

Fig. 40

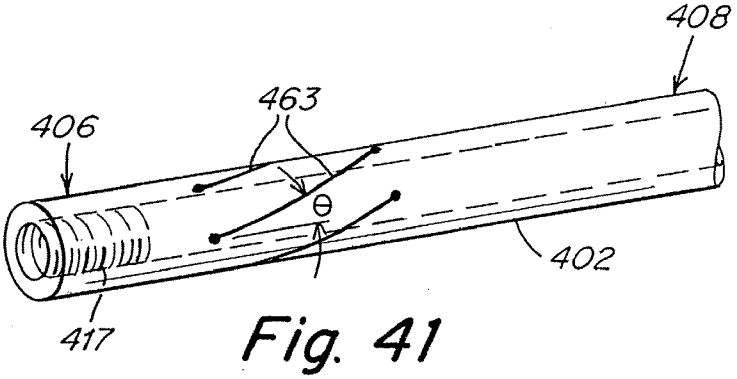

Fig. 41

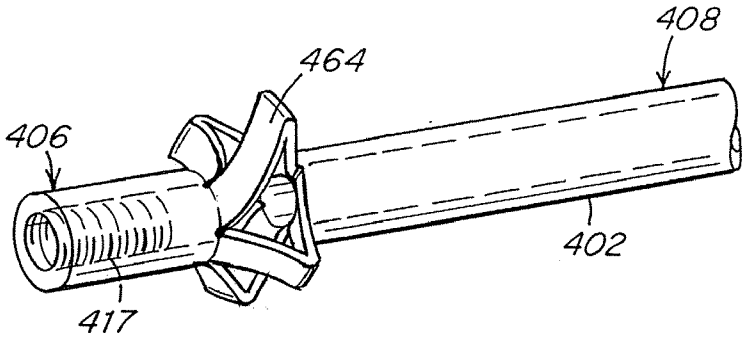

Fig. 42

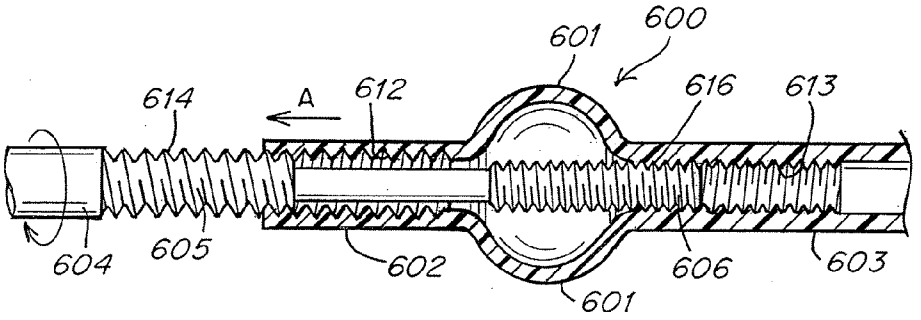

Fig. 43A

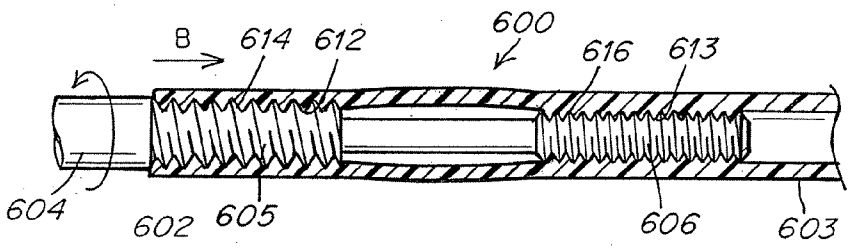

Fig. 43B

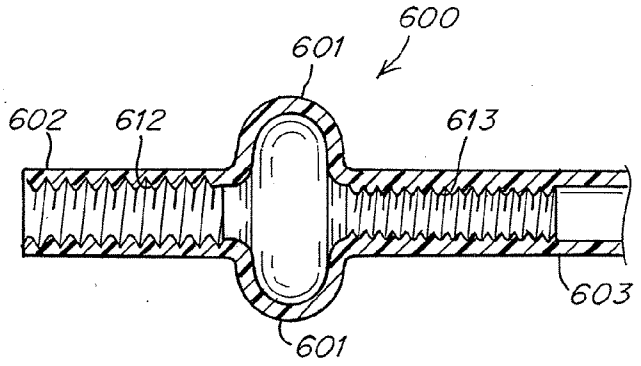

Fig. 44

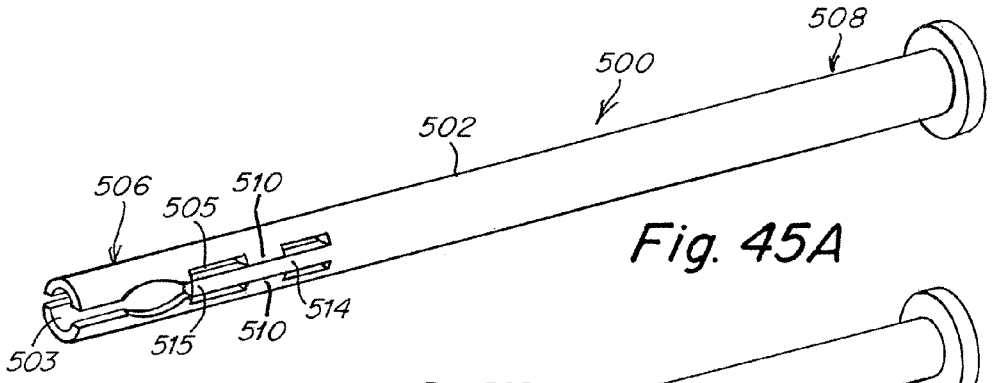

Fig. 45A

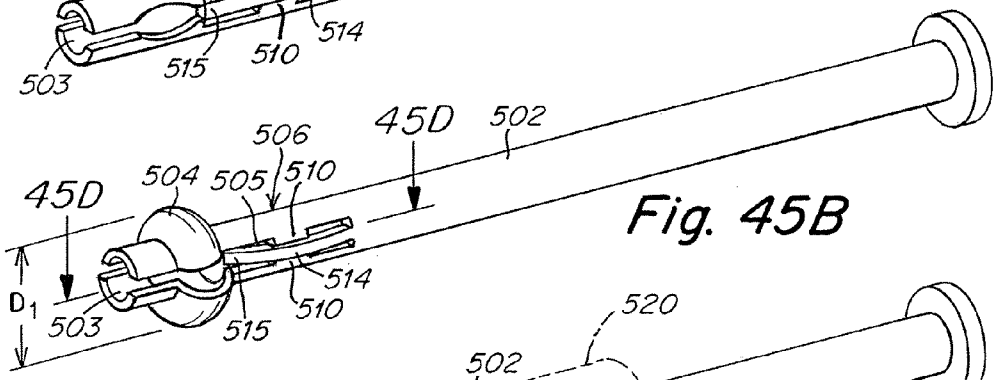

Fig. 45B

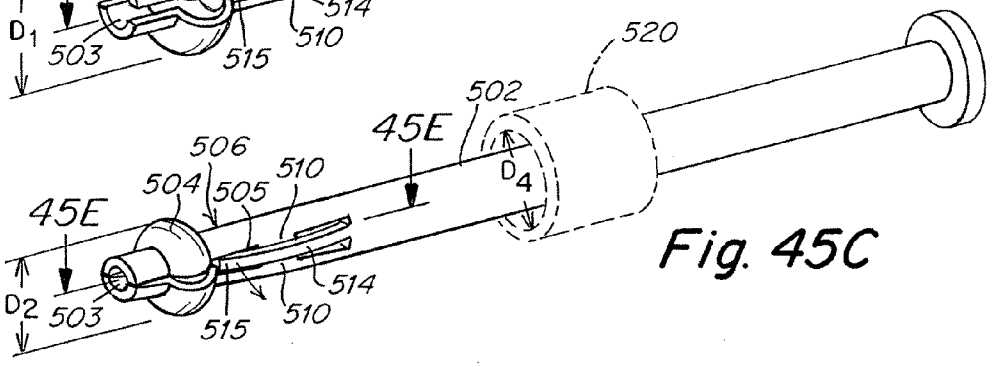

Fig. 45C

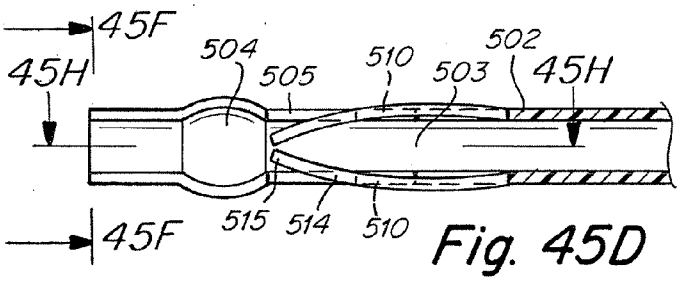

Fig. 45D

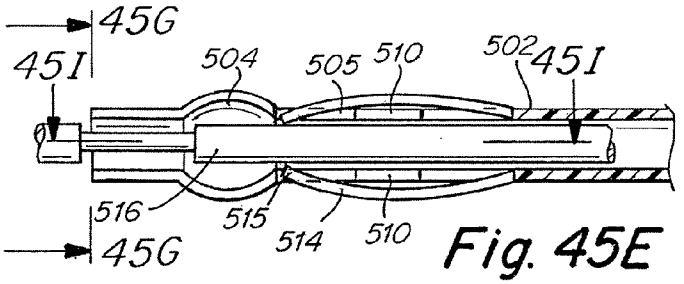

Fig. 45E

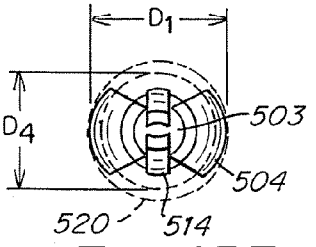

Fig. 45F

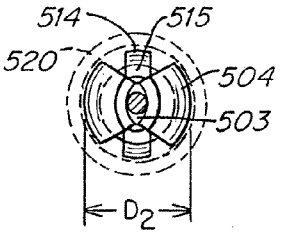

Fig. 45G

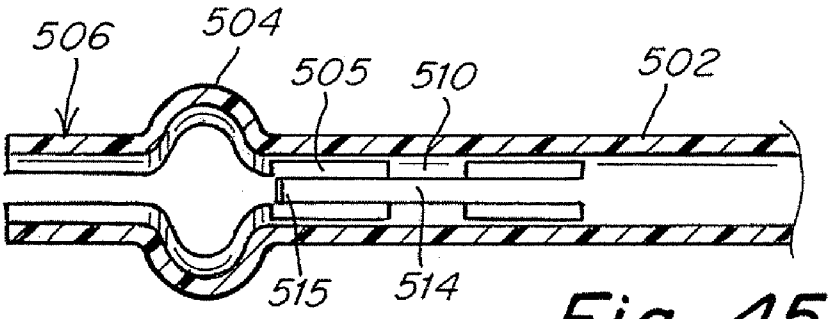

Fig. 45H

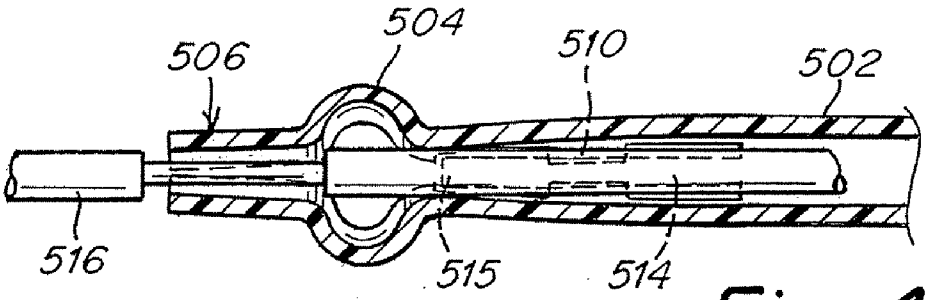

Fig. 45I

CATCH MEMBERS FOR OCCLUDER DEVICES

CROSS-REFERENCE TO RELATED APPLICATIONS

[0001] This Application claims the benefit of priority to U.S. Provisional Application Ser. No. 60/753,681, filed Dec. 22, 2005, the disclosure of which is incorporated by reference herein.

FIELD OF THE INVENTION

[0002] This invention relates generally to occlusion devices for the closure of physical anomalies, such as an atrial septal defect, a patent foramen ovale, and other septal and vascular defects. The invention also relates to mechanisms for deploying such devices and securing them in the deployed position.

BACKGROUND OF THE INVENTION

[0003] A patent foramen ovale (PFO), illustrated in FIG. **1**, is a persistent, one-way, usually flap-like opening in the wall between the right atrium **11** and left atrium **13** of the heart **10**. Because left atrial (LA) pressure is normally higher than right atrial (RA) pressure, the flap usually stays closed. Under certain conditions, however, right atrial pressure can exceed left atrial pressure, creating the possibility that blood could pass from the right atrium **11** to the left atrium **13** and blood clots could enter the systemic circulation. It is desirable that this circumstance be eliminated.

[0004] The foramen ovale serves a desired purpose when a fetus is gestating. Because blood is oxygenated through the umbilical cord, and not through the developing lungs, the circulatory system of the fetal heart allows the blood to flow through the foramen ovale as a physiologic conduit for right-to-left shunting. After birth, with the establishment of pulmonary circulation, the increased left atrial blood flow and pressure results in functional closure of the foramen ovale. This functional closure is subsequently followed by anatomical closure of the two over-lapping layers of tissue: septum primum **14** and septum secundum **16**. However, a PFO has been shown to persist in a number of adults.

[0005] The presence of a PFO is generally considered to have no therapeutic consequence in otherwise healthy adults. Paradoxical embolism via a PFO is considered in the diagnosis for patients who have suffered a stroke or transient ischemic attack (TIA) in the presence of a PFO and without another identified cause of ischemic stroke. While there is currently no definitive proof of a cause-effect relationship, many studies have confirmed a strong association between the presence of a PFO and the risk for paradoxical embolism or stroke. In addition, there is significant evidence that patients with a PFO who have had a cerebral vascular event are at increased risk for future, recurrent cerebrovascular events.

[0006] Accordingly, patients at such an increased risk are considered for prophylactic medical therapy to reduce the risk of a recurrent embolic event. These patients are commonly treated with oral anticoagulants, which potentially have adverse side effects, such as hemorrhaging, hematoma, and interactions with a variety of other drugs. The use of these drugs can alter a person's recovery and necessitate adjustments in a person's daily living pattern.

[0007] In certain cases, such as when anticoagulation is contraindicated, surgery may be necessary or desirable to close a PFO. The surgery would typically include suturing a PFO closed by attaching septum secundum to septum primum. This sutured attachment can be accomplished using either an interrupted or a continuous stitch and is a common way a surgeon shuts a PFO under direct visualization.

[0008] Umbrella devices and a variety of other similar mechanical closure devices, developed initially for percutaneous closure of atrial septal defects (ASDs), have been used in some instances to close PFOs. These devices potentially allow patients to avoid the side effects often associated with anticoagulation therapies and the risks of invasive surgery. However, umbrella devices and the like that are designed for ASDs are not optimally suited for use as PFO closure devices.

[0009] Currently available septal closure devices present drawbacks, including technically complex implantation procedures. Additionally, there are significant complications due to thrombus, fractures of the components, conduction system disturbances, perforations of heart tissue, and residual leaks. Many devices have high septal profile and include large masses of foreign material, which may lead to unfavorable body adaptation of a device. Given that ASD devices are designed to occlude holes, many lack anatomic conformability to the flap-like anatomy of PFOs. Thus, when inserting an ASD device to close a PFO, the narrow opening and the thin flap may form impediments to proper deployment. Even if an occlusive seal is formed, the device may be deployed in the heart on an angle, leaving some components insecurely seated against the septum and, thereby, risking thrombus formation due to hemodynamic disturbances. Finally, some septal closure devices are complex to manufacture, which may result in inconsistent product performance.

[0010] Various designs have disclosed septal closure devices made from a tube. These devices generally have a low septal profile in a delivery configuration, and a high septal profile in a deployed configuration. Upon deployment, these devices seal a septal defect. The unique design of these tube-made devices, however, requires an additional catch mechanism to catch the devices in their deployed configurations.

[0011] Various catch member designs have been proposed to catch the tube-made septal closure devices in the deployed configuration, temporary and permanently. Making such catch members capable of forming a temporary lock during partial deployment and a more secure permanent lock after full deployment has proved challenging. Some designs are not sufficiently reliable and other designs cannot be manufactured effectively. Finally, some designs, while workable on paper, do not perform satisfactorily in the human body.

[0012] The septal closure devices and techniques disclosed herein are designed to address these and other deficiencies of prior art design and techniques for delivering and retrieving such devices.

BRIEF SUMMARY OF THE INVENTION

[0013] In some aspects, the present invention includes several delivery devices and techniques for delivering an

implant into a desired location within the body. This delivery technique relates particularly to, but is not limited to, a septal occluder made from a polymer tube. These delivery techniques, in addition to use with septal occluders, can be applied to other medical devices, such as other expandable devices constructed to be delivered in a reduced profile configuration to an expanded profile or delivered configuration.

[0014] Catch members may be used to deploy and keep the device in place. According to some embodiments, the catch member maintains a reduced axial length of the device when the device is in the deployed configuration. Also, varied constructions could be used to maintain the axial dimension of the device, such as different locking mechanisms. Preferably, the catch member secures both sides of the device in the reduced profile configuration with a single element. Generally, during the delivery stage, the catch member has a smaller diameter at its proximal end compared to the diameter of the proximal end of the occluder. This configuration allows the proximal end of the occluder to slide over the proximal end of the catch member during deployment sequence. This may be achieved by compression of the proximal end of the catch member, by expansion of the proximal end of the occluder, or a combination of both. In a catching configuration, the catch member generally has a greater diameter at its proximal end compared to the diameter of the proximal end of the occluder, which keeps the occluder in its deployed configuration.

[0015] In various embodiments, the catching configuration can be temporary or permanent. A temporary catch configuration generally allows for the catch member to release, while a permanent catch configuration generally is not designed for release. Some embodiments have a temporary catch configuration, which allows for confirmation of proper deployment, and a permanent catch configuration, that is engaged when proper deployment is confirmed.

[0016] In certain embodiments, a permanent catch configuration can, for example, have a greater diameter at the proximal end of the catch member than a temporary catch configuration. A temporary catch configuration is generally preferred during evaluation and repositioning of a device, such as an occluder, while a permanent catch configuration is generally preferred once the device is deployed.

[0017] According to at least some embodiments, the catch member is formed from a tube. According to some embodiments, the tube includes a material selected from the group consisting of metals, shape memory materials, alloys, polymers, bioabsorbable polymers, and combinations thereof. In particular embodiments, the tube includes a shape memory polymer. In particular embodiments, the tube includes nitinol. In some embodiments, the tube is formed by rolling a flat piece of material into a tubular form. According to some embodiments, the catch member is formed by cutting the tube. The catch member is placed in its deployment configuration by fixing the axial length of the device, for example by preventing the proximal end of the device from sliding over the proximal catch element.

[0018] In some embodiments, the catch member uses a partially cut tube, with an axis of the proximal portion of the tube at an angle with respect to the axis of the distal side of the tube. A portion of the proximal side of the tube catches the proximal end of the device and keeps it in a deployed position.

[0019] In some embodiments, the catch member uses a series of protrusions at its proximal end. Once the protrusions are released, for example by removing the delivery wire, the protrusions project radially outward from the proximal side of the tube and keep the device in its locked position by preventing the proximal end of the device from sliding over the protrusions. In various embodiments, the protrusions are biased towards the proximal or the distal end of the catch member. In some embodiments, they may be twisted relative to the axis of the catch member.

[0020] In certain embodiments, the catch member may include a bump and pre-curved tabs at its proximal side. The bump is interrupted by a largely planar lumen slicing through the proximal side of the catch member. The lumen allows compression of the catch member with the delivery wire attached to provide a temporary catch configuration. In some embodiments, after the delivery wire is removed, the tabs automatically slide into the lumen to prevent or reduce compressibility of the catch member, thus providing a permanent catch configuration.

[0021] In a further aspect, the catch member may include a delivery wire and a catch tube that is threadedly secured to the delivery wire at two different locations. Each threaded connection has different pitches. Twisting of the delivery wire with respect to the catch tube creates a temporary or permanent catch depending on the selected design criteria. This system is especially adapted to construction with malleable materials. In another aspect, the protrusions can be threaded with different pitches to allow for modulation of the protrusion configuration by twisting the delivery wire.

[0022] These and other aspects and embodiments of the disclosure are illustrated and described below.

BRIEF DESCRIPTION OF THE DRAWINGS

[0023] In the Drawings:

[0024] FIG. **1** is a schematic representation of a human heart including various septal defects;

[0025] FIG. **2** shows an occluder and a catch member according to one embodiment of the disclosure;

[0026] FIG. **3** illustrates an occluder and a catch member during the initial stage of deployment according to one embodiment of the invention;

[0027] FIG. **4** illustrates an occluder and a catch member with the distal side of the occluder in its deployed configuration according to one embodiment of the invention;

[0028] FIG. **5** illustrates an occluder and a catch member in a deployed configuration according to one embodiment of the invention;

[0029] FIG. **6** is a view of cuts made during manufacture of a catch member according to one embodiment of the invention;

[0030] FIG. **7** is a view of a catch member according to one embodiment of the invention;

[0031] FIG. **8** is a cross-sectional view of the catch member along lines **8-8** in FIG. **7** according to one embodiment of the invention;

[0032] FIG. **9** is an exploded cross-sectional side view of the catch member along lines **9-9** in FIG. **8** according to one embodiment of the invention;

[0033] FIG. **10** is a cross-sectional side view of one step in a deployment sequence according to one embodiment of the invention;

[0034] FIG. **11** is a cross-sectional side view of one step in a deployment sequence according to one embodiment of the invention;

[0035] FIG. **12**A is a cross-sectional side view of a deployed occluder and a catch member according to one embodiment of the invention;

[0036] FIG. **12**B is a cross-sectional side view of a deployed occluder and a catch member according to one embodiment of the invention;

[0037] FIG. **13** is an axial cross-sectional drawing of an occluder and a catch member, in a delivery configuration, according to one embodiment of the invention;

[0038] FIGS. **14-17** are cross-sectional side views of various steps in a deployment sequence according to one embodiment of the invention;

[0039] FIGS. **18-22** are cross-sectional side views of various steps in a retrieval sequence according to one embodiment of the invention;

[0040] FIG. **23** is a cross-sectional side view of a detachment step according to one embodiment of the invention;

[0041] FIG. **24** is an exploded view of an embodiment of the distal portion of the catch member according to one aspect of the invention;

[0042] FIG. **25** is a view of the cut(s) made during the manufacture of a catch member according to one embodiment of the invention;

[0043] FIG. **26** is a cross-sectional view of a step in the manufacture of the catch member according to one embodiment of the invention;

[0044] FIG. **27** is an exploded cross-sectional view of the catch member according to one embodiment of the invention;

[0045] FIG. **28** is an exploded cross-sectional side view of the catch member along lines **28-28** in FIG. **27** according to one embodiment of the invention;

[0046] FIGS. **29-30** are cross-sectional side views of various steps in the deployment sequence according to one embodiment of the invention;

[0047] FIG. **31** is a cross-sectional side view of the delivery system during the detachment process according to one embodiment of the invention;

[0048] FIG. **32** is a view of cuts made during manufacture of a catch member according to one embodiment of the invention;

[0049] FIG. **33** is a view of a step in the manufacture of a catch member according to one embodiment of the invention;

[0050] FIG. **34** is an expanded cross-sectional side view of the catch member according to one embodiment of the invention;

[0051] FIG. **35** is an exploded cross-sectional side view of the catch member along lines **35-35** in FIG. **34** according to one embodiment of the invention;

[0052] FIGS. **36-37** are cross-sectional side views of various steps in the deployment sequence according to one embodiment of the invention;

[0053] FIG. **38** is a cross-sectional side view of the delivery system during the detachment process according to one embodiment of the invention;

[0054] FIG. **39** is a view of a catch member according to one embodiment of the invention;

[0055] FIG. **40** is a view of a catch member according to one embodiment of the invention;

[0056] FIG. **41** is a view of cuts made during manufacture of a catch member according to one embodiment of the invention;

[0057] FIG. **42** is a view of a catch member according to one embodiment of the invention;

[0058] FIG. **43**A illustrates an embodiment of the proximal catch element in a starting configuration according to one aspect of the invention;

[0059] FIG. **43**B illustrates an embodiment of the proximal catch element in a temporary catch configuration according to one aspect of the invention;

[0060] FIG. **44** illustrates an embodiment of the proximal catch element in a permanent catch configuration according to one aspect of the invention;

[0061] FIG. **45**A illustrates a step in the manufacture of the catch member according to one embodiment of the invention;

[0062] FIGS. **45**B, **45**D, **45**F and **45**H illustrate an embodiment of the catch member in a permanent catch configuration according to one aspect of the invention; and

[0063] FIGS. **45**C, **45**E, **45**G and **45**I illustrate an embodiment of the catch member in a temporary catch configuration according to one aspect of the invention.

DETAILED DESCRIPTION OF THE ILLUSTRATED EMBODIMENTS

[0064] Aspects of the present invention provide devices, delivery/retrieval systems and techniques for delivering such devices intended to occlude an aperture within body tissue. In particular, and as described in detail below, the described occluder may be used for closing an ASD, VSD or PFO in the atrial septum of a heart. Although the embodiments are described with reference to an ASD, VSD or PFO, one skilled in the art will recognize that the device and methods of the present invention may be used to treat other anatomical conditions. As such, the invention should not be considered limited in applicability to any particular anatomical condition. In addition, the systems and methods for delivery and retrieval, and for catching a device in a deployed state, that are aspects of the present invention may also be used in connection with other types of devices besides an occluder, in particular, devices having tubular profiles.

[0065] FIG. **1** illustrates a human heart **10**, having a right atrium **11** and a left atrium **13** and including various anatomical apertures **18***a* and **18***b*. The atrial septum **12** includes septum primum **14** and septum secundum **16**. The anatomy of the septum **12** varies widely within the population. In some people, septum primum **14** extends to and overlaps with septum secundum **16**. The septum primum **14** may be quite thin. When the anatomical apertures **18***a* is present, blood could travel through the anatomical aperture **18***a* between septum primum **14** and septum secundum **16** (referred to as "the PFO tunnel"). Additionally, or alternatively, the presence of an ASD could permit blood to travel through an aperture in the septal tissue, such as through the anatomical aperture **18***b*.

[0066] this application, "distal" refers to the direction away from a catheter insertion location and "proximal" refers to the direction nearer the insertion location. Additionally, the term "delivery configuration" refers to the configuration of a device, such as an occluder, when it has a reduced profile in a delivery sheath or catheter. The term "deployed configuration" refers to the configuration of the device, such as an occluder, when it has deployed from the catheter, such as at the desired implantation location.

[0067] FIGS. **2-5** illustrate an exemplary occluder with which systems and techniques disclosed herein may be used. A catch member **50** contains a proximal catch element **52** and a distal catch element, such as a flange **54**, and is designed to be disposed at the distal end of tube **25** of occluder **70**. Occluder **70**, for example, can be formed by cutting a series of slits on tube **25**. As shown in FIGS. **3-5**, distal petals **32** are produced by cutting slits **31** in the upper portion of tube **25** according to the cutting pattern shown in FIG. **2**. As shown in FIG. **3**, the distal portion of the tube **25** is cut in half to form half sections **91***a* and **91***b*. The half sections **91***a* and **91***b* are further cut to a proximal distance from distal tip **39** into quarter sections **92***a*, **93***a*, **92***b*, and **93***b*. The cuts are discontinued and quarter sections **92***a* and **92***b* form half section **94***a* at distal tip **39**, and quarter sections **93***a* and **93***b* form half section **94***b* at distal tip **39**. Upon application of force F_d to distal tip **39**, struts defined by slits **31** bow and twist outward to form distal petals **32** in distal side **30**, as shown in FIGS. **4-5**. The movement of the struts during deployment is such that the struts rotate in an orthogonal plane relative to the axis of the device. Central tube **22** may be constrained during the application of force F_d, or any combination of forces sufficient to reduce the axial length of the tube **25** may be applied. One end of each of distal petals **32** originates from central tube **22**, while the other end originates from distal tip **39** (FIGS. **3-4**). Proximal petals **42** may be formed in proximal side **40**, as shown in FIGS. **3-5**, making slits **41** between central tube **22** and proximal tip **44**, using the same cutting pattern described above.

[0068] The tube(s) **25** forming occluder **70** may be formed from a biocompatible metal or polymer. In at least some embodiments, occluder **70** is formed of a bioabsorbable polymer, or a shape memory polymer. Shape memory polymers can be advantageous so that the structure of the device assists in pressing the PFO tunnel closed. In other embodiments, occluder **70** is formed of a biocompatible metal, such as a shape memory alloy (e.g., nitinol). The thermal shape memory and/or superelastic properties of shape memory polymers and alloys permit occluder **70** to resume and maintain its intended shape in vivo despite being distorted during the delivery process. Alternatively, or additionally, occluder **70** may be formed of a bioabsorbable metal, such as iron, magnesium, or combinations of these and similar materials. Exemplary bioabsorbable polymers include polyhydroxyalkanoate compositions, for example poly-4-hydroxybutyrate (P4HB) compositions, disclosed in U.S. Pat. No. 6,610,764, entitled Polyhydroxyalkanoate Compositions Having Controlled Degradation Rate and U.S. Pat. No. 6,548,569, entitled Medical Devices and Applications of polyhydroxyalkanoate Polymers, both of which are incorporated by reference in their entirety.

[0069] The cross-sectional shape of tube **25** may be circular or polygonal, for example square, pr hexagonal. The slits **31** and **41** may be disposed on the face of the polygon (i.e., the flat part) or on the intersection of the faces.

[0070] The tube can be injection molded, extruded, or constructed of a sheet of material and rolled into a tube. The sheet of material could be a single ply sheet or multiple ply. The slits that form the struts could be cut or stamped into the sheet prior to rolling the sheet into a tube to connect the ends to form an enclosed cross section. Various geometrical cross sections are possible including circular, square, hexagonal and octagonal and the joint could be at the vertex or along the flat of a wall if the cross section is of a particular geometry. Various attachment techniques could be used to join the ends of the sheet to form a tube, including welding, heat adhesives, non-heat adhesives and other joining techniques suitable for in-vivo application.

[0071] The petal configuration is the deployed configuration. Occluder **70** can be secured in the petal configuration by a catch member that holds the ends of the tube **25** together, certain embodiments of which are described below. Use of the terms distal and proximal sides or portions **30** and **40**, respectively, include the petals that are formed on the distal and proximal sides.

[0072] The embodiment described in conjunction with FIGS. **2-5** has similarities to the devices disclosed in U.S. patent application Ser. No. 10/890,784, entitled Tubular Patent Foramen Ovale (PFO) Closure Device with Locking Mechanism, filed on Jul. 14, 2004; U.S. patent application Ser. No. 11/070,027, entitled Delivery/Recovery System for Clover Leaf Septal Occluder, filed on Mar. 2, 2005; U.S. patent application Ser. No. 11/235,661, entitled Occluder Device Double Securement System for Delivery/Recovery of Such Occluder Device, filed Sep. 16, 2005; U.S. patent application Ser. No. 11/384,635, filed Mar. 20, 2006, entitled Catch Member for PFO Occluder; U.S. patent application Ser. No. 60/662,990, filed Mar. 18, 2004, entitled Suture Delivery/Recovery System for PFO Occluder with Catch System; and U.S. patent application Ser. No. 11/395,718, entitled Tubular Patent Foramen Ovale (PFO) Closure Device with Catch System, filed Mar. 31, 2006; all of which have the same assignee as the present application, and are incorporated by reference in their entirety. These incorporated documents describe how a device can be formed by making cuts or slits in a tube and compressing the ends, and how to deliver such a device. Embodiments of the catch members described herein are not restricted to the particular embodiment of occluder shown in FIGS. **2-5** and may be used with a number of devices and, in particular, may be used in conjunction with various devices described in the aforementioned patent applications.

[0073] In one alternate embodiment of an occluder, one end of each of distal petals originates from a central tube, while the other end originates from the distal end. Upon application of a force to the distal end to reduce the axial length, extended segments defined by slits in the tube bow and twist outward to form the distal petals in the distal side of the occluder. The movement of the segments during deployment is such that the segments rotate in an orthogonal plane relative to the axis of the device. The central tube may be constrained during the application of force, or any combination of forces sufficient to reduce the axial length of the tube may be applied. This embodiment is illustrated, for example, in FIGS. **2**E-**2**H of U.S. patent application Ser. No. 11/395,718, which has been incorporated by reference above.

[0074] The transformable design of occluder **70** enables occluder **70** to be delivered in a low profile, tubular form and to be converted readily, i.e., by reducing the axial length, in place to the high-profile deployed configuration. Moreover, the conversion can readily be effected by forcing distal tip **39** and proximal tip **44** together. For example, distal side **30** and proximal side **40** of occluder **70** may be deployed in separate steps, or both distal side **30** and proximal side **40** of occluder **70** may be exposed (e.g., out of the delivery catheter) prior to engaging the catch member and deployed together as the catch member is engaged.

[0075] Occluder **70** may be prepared for delivery to an aperture **18***a* or **18***b* in any one of several ways. Slits **31** and **41** may be cut such that tube **25** bends into its intended configuration following deployment in vivo. Specifically, slits **31** and **41** may be cut to produce struts **32** and **42** of a thickness that facilitates the bending and formation of loops **32** and **42** upon the application of forces F_d and/or F_p during deployment. See FIGS. **3** and **4**. Alternatively and/or additionally, a tube **25** formed of a shape memory material may be preformed into its intended configuration ex vivo so that it will recover its preformed shape once deployed in vivo. According to at least some embodiments, this preforming technique produces more reliable deployment and bending of occluder **70** in vivo. An intermediate approach may also be used: tube **25** may be only slightly preformed ex vivo such that it is predisposed to bend into its intended shape in vivo upon application of forces F_d and F_p.

[0076] An embodiment of the catch member according to one aspect of the invention is illustrated in FIGS. **6**-**9**. FIGS. **6** and **7** illustrate aspects of the manufacture of the catch member **100**. Specifically, slits **103** (which include a transverse slit **103***a* and axial slits **103***b*) are cut into the proximal side **106** of the catch tube **102** to create arms **104**, each arm having a distal surface **104***a*. Two arms **104** are illustrated. Of course, any number greater than one is possible. The geometrical constraints of the tube and manufacturing constraints of the slits would allow for up to 8 arms. Catch tube **102** is illustrated with a threaded portion **117**, which is used to secure the delivery wire to the catch member, a central lumen **112** into which the delivery wire is adapted to go and a distal catch element **110** at the distal side **108** of the tube that serves to hold the distal end of the catch member to the occluder. The threaded portion **117** can be located at the proximal side **106** or the distal side **108** of the catch tube **102**. By pushing arms **104** towards the proximal side **106** of the tube, arms **104** can be conditioned into a bent configuration as illustrated on FIG. **7**. FIG. **8** illustrates the axial view of the arms **104** along lines **8**-**8** in FIG. **7**. The conditioning process may include and can be enhanced by an annealing process, which can provide additional shape stability to the arms **104**. After the conditioning process, arms **104** expand beyond the outside diameter of the catch tube **102**. An expanded cross-sectional view of arms **104** in the bent configuration along lines **9**-**9** in FIG. **8** is shown in FIG. **9**. FIG. **9** illustrates recess **118** created by the conditioning of arms **104** into the bent configuration. The arms can also be called "tabs", "stays", "holders", or any other suitable word or phrase. Referring to FIGS. **2**-**5**, the distal side **108** of the catch tube may be ultrasonically welded to occluder **70**, or some other fixing agent, such as glue, can be used. Also referring to FIGS. **2**-**5**, the catch tube **102** is slidably disposed within the central tube **22** of occluder **70**, and therefore, central tube **22** is able to slide against the catch tube **102** during the deployment and retrieval of occluder **70**.

[0077] FIGS. **10** and **11** illustrate steps in the deployment of the catching mechanism according to one embodiment of the disclosure. Occluder **70** is introduced to an aperture **18***a* or **18***b* by a delivery sheath **154** in its delivery configuration. The delivery catheter **152** is positioned within the delivery sheath **154** with minimal clearance between them. The distal end of the delivery catheter **152** includes a threaded portion **153**. In one embodiment, the threaded portion **153** is connected with the threaded portion **150** of the proximal tip **44** of the occluder. The distal tip **39** of the occluder is threadably connected to the delivery wire **156** at the threaded portion **117** of the catch tube **102**. As shown in FIG. **10**, the delivery wire has a recess **157**, illustrated as a narrowing in the circumference, into which the arms **104** are rested, in unlocked position, during the delivery process. The recess **157** can vary in size and in some designs may be optional. As discussed above, the threaded portion **117** can be located at the proximal side **106** or at the distal side **108** of the catch tube **102**.

[0078] Referring to FIG. **10**, the distal side **30** of occluder **70** is exposed by withdrawing delivery sheath **152** proximally while holding delivery catheter **154** and delivery wire **156** stable. The distal side **30** of occluder **70** is deployed by advancing delivery catheter **154** distally to reduce the axial length between the central tube **22** and the distal tip **39** of occluder **70**, while holding delivery sheath **152** and delivery wire **156** in place. Alternatively, the distal side **30** of occluder **70** is deployed by withdrawing delivery wire **156** proximally to reduce the axial length between the central tube **22** and the distal tip **39** of occluder **70**, while holding delivery sheath **152** and delivery catheter **154** in place. Still referring to FIG. **10**, the proximal side **40** of occluder **70** is exposed by further withdrawing delivery sheath **152** proximally while holding delivery catheter **154** and delivery wire **156** in place. The proximal side **40** of occluder **70** is deployed by advancing delivery catheter **154** distally to reduce the axial length between the central tube **22** and the proximal tip **44** of occluder **70**, while holding delivery sheath **152** and delivery wire **156** in place. Alternatively, proximal side **40** of occluder **70** is deployed by withdrawing delivery wire **156** proximally to reduce the axial length between the central tube **22** and the proximal tip **44** of the occluder **70**, while holding delivery sheath **152** and delivery catheter **154** in place. Referring to FIG. **11**, occluder **70** is locked in its deployed configuration as the proximal tip **44** is advanced beyond arms **104**. In this embodiment, arms **104**

are partially activated, i.e. released into the temporary catch configuration illustrated in FIG. **11**, when surface **156***a* of the delivery wire **156** collides with the distal surface **104***a* of arms **104**. Occluder **70** is then released by unscrewing the threaded portion **153** of the delivery catheter **152** from the threaded portion **150**, and unscrewing the threaded portion **117** of the catch tube **102** from the delivery wire **156**. Withdrawal of delivery catheter **152** releases arms **104** into a permanent catch configuration illustrated in FIGS. **7-9**.

[**0079**] FIG. **12**A illustrates an alternative embodiment of the catch member after the delivery wire **156** has been unscrewed and withdrawn. In FIG. **12**A, the embodiment of the proximal catch member has straight arms **180** with tips **182** exerting force against the proximal edge **151** of the threaded portion **150**. As illustrated, the outer rim of the proximal edge touches tips **182**.

[**0080**] FIG. **12**B illustrates an alternative embodiment of the catch member after the delivery wire **156** has been unscrewed and withdrawn. In FIG. **12**B, the embodiment of the proximal catch member has V-shaped arms **200** with tips **202** restraining movement of the proximal surface **151***a* of the proximal edge **151** of the occluder to prevent the occluder from expanding axially into its delivery configuration. While the embodiments of FIG. **12**A and **12**B are illustrated with the threaded portion **117** at the distal side of arms **104**, the threaded potion can also be located at the proximal side of arms **104**.

[**0081**] FIG. **13** illustrates the initial step for a typical delivery sequence in accordance with one aspect of the disclosure. Occluder **224** and catch member **222** are secured to the delivery catheter **152** and to the delivery wire **156**, respectively. The threaded portion of the delivery catheter **153** is screwed onto the male threaded portion **150** of occluder **224**. The threaded portion of the delivery wire **156** is screwed onto the female threaded portion **117** of the catch member **222**. Of course, the male and female threads can be reversed if desired. The distal end of the delivery sheath **154** with the enclosed occluder **224** is inserted through the aperture to be occluded, such as the anatomical aperture **18***a* or **18***b* of FIG. **1**, to approximately the midpoint of the occluder **224**.

[**0082**] Referring now to FIG. **14**, the distal side **30** of occluder **224** is deployed on the distal side of the aperture in the left atrium **13**. The distal portion **30** is deployed by first retracting the delivery sheath **154** to expose the distal portion **30** of occluder **224**. Force F_2 is simultaneously applied to the delivery catheter **152** and delivery wire **156** to hold occluder **224** stationary. Referring now to FIG. **15**, the axial length of occluder **224** is then reduced by applying pulling force F_1 on the delivery wire **156** with sufficient force to cause arms **104** of the catch member **222** to be pulled through the central tube **22** of occluder **224** and the distal portion **30** of occluder **224** to compress and the distal petals **32** to form. The central tube **22** of occluder **224** catches on the catch member **222**. This holds the distal petals **32** in place while the remainder of the deployment sequence is carried out.

[**0083**] Referring now to FIG. **16**, the proximal side **40** of occluder **224** is deployed on the proximal side of the aperture in the right atrium **11**. The proximal portion **40** is deployed by first retracting the delivery sheath **154** to expose the proximal portion **40** of occluder **224**. The proximal petals **42** are then formed by simultaneously advancing the delivery catheter **152** by applying force F_2 and retracting the delivery wire **156** by applying force F_1 to maintain the position of occluder **224**. Eventually, the proximal tip **44** of occluder **224** is pushed over arms **104** of the catch member **222** and occluder **224** is caught on the distal surface **104***a* of arms **104**. After the delivery catheter **152** is detached from occluder **224**, the resulting configuration is illustrated in FIG. **17**

[**0084**] Occluder **224** can now be evaluated for proper deployment at the desired location, for example by fluoroscopy or any other suitable technique with the delivery system **220**, including delivery sheath **154**, delivery catheter **152**, and delivery wire **156** attached or partially detached. The delivery system **220** can be partially detached by releasing the securement system provided by the threaded connection to the proximal tip of the occluder. As shown in FIG. **17**, according to one preferred embodiment, to evaluate the proper deployment of the occluder, if desired, the delivery sheath **154** can be further retracted and the delivery catheter **152** can be detached from occluder **224**. The delivery catheter **152** can be detached by applying torque to unscrew the delivery catheter **152** from the proximal threaded portion **150** of occluder **224** and retracting the delivery catheter **152**. The delivery wire **156** continues to secure occluder **224**, as illustrated in FIG. **17**. This affords the clinician a substantially unobstructed view of the occluder delivery site in order to evaluate the placement of occluder **224**. In addition, the more flexible distal portions of the delivery catheter **152** and the delivery wire **156** allow the distal end of the delivery system **220** and the deployed occluder to be re-positioned so that the view is not obstructed. The positioning of occluder **224** can be evaluated using fluoroscopy or other appropriate techniques.

[**0085**] If the delivery or deployment is not satisfactory, while the delivery wire **156** continues to secure occluder **224**, then the occluder can be retrieved or repositioned in the sequence shown in FIGS. **18-22**.

[**0086**] As illustrated in FIG. **18**, if delivery catheter **152** has been detached, it is reattached by advancing the threaded portion **153** of the delivery catheter **152** toward the threaded portion **150** of occluder **224** and applying torque until the delivery catheter **152** is threaded onto the threaded portion **150** of occluder **224**, as illustrated in FIG. **18**.

[**0087**] Referring now to FIG. **19**, the delivery sheath **154** is pushed towards occluder **224**. Then force F_3 is applied to the delivery catheter **152** to pull the proximal portion **40** of occluder **224** over the arms **104** of the catch member **222**. Referring to FIG. **20**, as the delivery sheath **154** is advanced distally to cover the proximal portion **40** of occluder **224**, the axial length of occluder **224** is increased, the proximal petals **42** are unformed and the proximal portion **40** of occluder **224** returns to its tubular profile. Referring to FIG. **21**, force F_5 is applied to the delivery sheath **154** to advance it over the proximal portion **40** of occluder **224** and retain the proximal portion **40** of occluder **224** in the low-profile configuration. Also, force F_6 is applied to the delivery wire **156** in order to release the distal portion **30** of occluder **224** and further increase the axial length of occluder **224**.

[**0088**] Referring now to FIG. **22**, the distal portion **30** of occluder **224** is fully extended back into its low-profile configuration and forces F_7 and F_8 are applied to the delivery

sheath **154** and the delivery catheter **152** in order to retrieve occluder **224** back into delivery sheath **154**.

[**0089**] FIG. **23** illustrates the detachment of the delivery wire **156** from the catch member **222** when an occluder is fully deployed and its position is satisfactory. The threaded portion of the delivery wire **156** is unscrewed from the threaded portion **117** of the catch member and the delivery wire **156** is then retracted into the delivery catheter **152**. The delivery wire **156**, the delivery catheter **152** and the delivery sheath **154** are then removed from the heart **10** by application of force F_9.

[**0090**] FIG. **24** illustrates an embodiment of the distal end of the catch member **222**, in which the distal tip **39** of the occluder is welded to the catch tube **102** using ultrasonic energy, heat, adhesive, or a solvent. Alternatively, both the catch member **222** and the catch tube **102** can be made of one piece. The threaded portion **117** may be disposed anywhere along the axis of the catch tube. In a preferred form, the threaded portion **117** may be immediately distal to arms **104**, not illustrated in FIG. **24**.

[**0091**] Another embodiment of the catch member according to the disclosure is illustrated in FIGS. **25-28**. FIGS. **25** and **26** illustrate exemplary steps in the manufacture of a catch member **300** by cutting a slit **303** into the proximal side **306** of the catch tube **302** to create a transverse, angled cut. The cut can be made at different angles with respect to the axis of the catch tube **302**. In a preferred form, the cut can be at approximately 45 degrees. Catch tube **302** is illustrated with a central lumen **312** and a threaded portion **317** at the distal side **308** of the tube. The threaded portion **317** may be at any location on the catch tube. In one embodiment, a distal catch element is attached to the distal end **308** of the catch member via ultrasonic welding, heat welding, solvent bonding, or adhesive. In another embodiment, the distal side **308** of the catch tube **302** is directly attached to the distal end **39** of the occluder via ultrasonic welding, heat welding, solvent bonding, or adhesive as shown, for example, in FIG. **24**.

[**0092**] By conditioning the axis of the proximal side **306** to be at an angle, for example at a right angle, with respect to the axis of the distal side **308**, the proximal side **306** can be conditioned into a bent configuration, for example by annealing. An example of a step in this process is illustrated on FIG. **26**, where an annealing wire **316** is used to hold the proximal side **306** and the distal side **308** in a non-parallel configuration to create an opening **318**. FIG. **27** illustrates an exploded cross-sectional view of the catch member **300** in a bent configuration. The axes of the proximal side **306** and distal side **308** of the catch tube **302** are shown at approximately a right angle, although smaller and larger angles are also encompassed by this disclosure. FIG. **28** illustrates a view of the proximal side **306** along lines **28-28** in FIG. **27**, with the catching surface **304***a* of the catching tip **304***a* shown.

[**0093**] FIGS. **29** and **30** illustrate steps of the deployment sequence of the occluder according to one embodiment of the disclosure. Referring to FIG. **29**, in one embodiment, the threaded portion **153** of the delivery catheter **152** is connected with the threaded portion **150** of the proximal tip **44** of the occluder. The distal tip **39** of the occluder is threadably connected to the delivery wire **156** at the threaded portion **317** of the catch tube **302**. With the proximal side **306** and the distal side **308** of the catch tube **302** axially aligned and the delivery wire **156** held in place, delivery sheath **154** is withdrawn proximally to expose the distal side **30** of the occluder, delivery catheter **152** is pushed towards the distal tip **39** of the occluder to deploy the distal side **30**. Referring now to FIG. **30**, the proximal side **40** of the occluder is exposed by further withdrawing delivery sheath **154** proximally while holding delivery catheter **152** and delivery wire **156** in place. The proximal side **40** of the occluder is deployed by advancing delivery catheter **152** distally. Alternatively, proximal side **40** of the occluder is deployed by withdrawing delivery wire **156** proximally.

[**0094**] Referring to FIG. **31**, upon full deployment of the occluder and upon satisfaction with its position, the occluder is released by unscrewing the delivery catheter **152** from the threaded portion **150** of the occluder, next unscrewing the delivery wire **156** from the threaded portion **317** of the catch tube **302**, and finally withdrawing delivery catheter **152**, delivery sheath **154**, and delivery wire **156** proximally. Once the delivery wire **156** is unscrewed from the threaded portion **317** and withdrawn, the proximal side **306** of the catch tube **302** and the catching tip **304** are released into the bent configuration, which secures the occluder in the deployed configuration.

[**0095**] FIG. **31** illustrates a deployed occluder after the delivery wire **156** has been detached from the occluder. In this embodiment, surface **150***a* rests against the proximal side of the catch tube **306** and/or the catching surface **304***a* to maintain the occluder in a deployed configuration.

[**0096**] Another embodiment of a catch member according to the disclosure is illustrated in FIGS. **32-35**. FIGS. **32** and **33** illustrate steps in the manufacture of the catch member **400** by cutting slits **403** into the proximal side **406** of the catch tube **402**. Catch tube **402** is illustrated with a central lumen **412**, a threaded portion **417**, a stopper element **414** and a distal catch element **410**. In one embodiment, the distal catch element **410** is attached to the distal end **39** of the occluder via ultrasonic welding, heat welding, solvent bonding, or adhesive as shown. In another embodiment, the distal side **408** of the catch tube **402** is directly attached to the distal end **39** of the occluder via ultrasonic welding, heat welding, solvent bonding, or adhesive as shown, for example, in FIG. **24**. As illustrated in FIG. **33**, the catch member **400** is conditioned to a deployed configuration by, for example, annealing with protrusions **404** formed. This can be done by applying forces F_m to reduce the axial length of the catch tube **402** while annealing the catch tube **402**, which results in formation of protrusions **404**. While four protrusions are illustrated, more or fewer protrusions can be made and employed from the catch tube **402**. In FIGS. **33-35**, the catch member **400** is illustrated in a deployed configuration with protrusions **404** formed. In FIG. **32**, the catch member **400** is in its delivery configuration with no protrusions formed as shown.

[**0097**] FIG. **34** illustrates a more detailed cross-sectional view of protrusions **404** and the stopper element **414**. The stopper element **414** is firmly attached to the tube **402**, and may contain one or more holes to connect the proximal lumen **412***a* to the distal lumen **412***b*. The stopper element is used to provide a stop for the delivery wire when being screwed in. FIG. **35** illustrates a view along lines **35-35** of FIG. **33**. While the number of protrusions **404** illustrated in

FIGS. **33-35** is four, a number greater or lesser than four is also encompassed by this disclosure.

[**0098**] FIGS. **36** and **37** illustrate steps of the deployment sequence of the occluder according to one embodiment of the disclosure. Referring to FIG. **36**, the threaded portion **153** of the delivery catheter **152** is connected to the threaded portion **150** of the proximal tip **44** of the occluder. The distal tip **39** of the occluder is threadably connected to the delivery wire **156** at the threaded portion **417** of the catch tube **402**. The catch member **400** is converted into a delivery configuration by screwing the delivery wire **156** into the threaded portion **417**. As the delivery wire travels toward the distal side **408** of the catch tube **402**, it hits the stopper element **414**. Further screwing elongates protrusions **404** and converts the catch member **400** into its delivery configuration, as illustrated in FIGS. **36** and **37**. Referring to FIG. **36**, with the delivery wire **156** held in place, the delivery sheath **154** is withdrawn proximally to expose the distal side **30** of the occluder and the delivery catheter **152** is pushed towards the distal tip **39** of the occluder to deploy the distal side **30** of the occluder. Referring now to FIG. **37**, the proximal side **40** of the occluder is exposed by further withdrawing the delivery sheath **154** proximally, while holding the delivery catheter **152** and the delivery wire **156** in place. The proximal side **40** of the occluder is deployed by advancing the delivery catheter **152** distally. Alternatively, the proximal side **40** of the occluder is deployed by withdrawing the delivery wire **156** proximally.

[**0099**] Referring to FIG. **38**, upon full deployment of the occluder and satisfaction with its position, the occluder is released by unscrewing the delivery catheter **152** from the threaded portion **150** of the occluder, then unscrewing the delivery wire **156** from the threaded portion **417** of the catch tube **402**, and finally withdrawing the delivery catheter **152**, delivery sheath **154**, and delivery wire **156** proximally. Once the delivery wire **156** is unscrewed from the threaded portion **417** and withdrawn, the catch member **400** is released into its deployed configuration with protrusions **404** formed.

[**0100**] The components of alternate embodiments of the catch member **400** described supra are described in connection with FIGS. **39-42**.

[**0101**] FIG. **39** illustrates the catch member **400** with protrusions **444** in the deployed configuration biased towards the distal side **408** of the catch tube **402**. This biasing can be achieved by modification of the manufacturing process, a step of which is illustrated in FIG. **33**. FIG. **40** illustrates the catch member **400** with protrusions **454** in the deployed configuration biased towards the proximal side **406** of the catch tube **402**. This biasing can be achieved by modification of the manufacturing process, a step of which is illustrated in FIG. **33**. In particular, annealing can be used to create alternate shapes.

[**0102**] FIG. **41** illustrates yet another alternative embodiment of the catch member **400**. In this embodiment, slits **463** are cut at an angle θ with respect to the axis of the catch tube **402**. When forces are applied to compress the proximal side **406** and the distal side **408** of the catch tube **402**, as illustrated for example in FIG. **33**, the proximal side **406** will twist with respect to the distal side **408**, which will result in protrusions **464** having a twisted shape as illustrated in FIG. **42**.

[**0103**] FIGS. **43**A, **43**B and **44** illustrate another embodiment of the invention. In this embodiment, a catch system **600** includes a temporary and a permanent catch that are achieved by a bump **601** on the proximal portion of a catch system, for example a catch tube by the use of two threads of different pitches. During manufacture of the catch system, bump **601** is formed on the proximal side of the tube by a material processing technique such as annealing. The use of two different pitches allows the catch member to be elongated in a delivery (reduced profile) configuration when a delivery wire is attached to the catch member. As the delivery wire is unscrewed from the catch member, the bump re-forms to provide a catch.

[**0104**] FIG. **43**A illustrates a cross-section of the proximal portion of the catch member during the deployment stage. The proximal end of the catch member, proximal to bump **601**, rests on the proximal section of the delivery wire **604**. A proximal section **605** of the delivery wire **604** has a larger diameter than the distal section of the delivery wire **606**. The difference in diameters can be smaller or larger than the difference illustrated in FIGS. **43**A, **43**B and **44**. In one embodiment, diameters of the proximal section of the delivery wire **604** and the distal section of the delivery wire **606** may be nearly identical.

[**0105**] Still referring to FIG. **43**A, a delivery wire has a smaller diameter at its distal section **606** and a larger diameter at its proximal section **604**. The difference in diameters can be smaller or larger than the difference illustrated in FIGS. **43**A, **43**B, and **44**. The proximal side of the delivery wire **604** has a thread **614** and the distal side of the delivery wire **606** has a thread **616**. The proximal end **602** of the catch member **600** has a matching thread **612** to thread **614** of the same pitch. The distal end **603** of the catch member has a matching thread **613** to thread **616** of the same pitch. Thread **614** has a larger pitch than thread **616**, by at least 0.01 of an inch.

[**0106**] During the occluder delivery process, the delivery wire **605** is advanced distally by threadably connecting threaded portion **613** of the delivery wire **605** and the threaded portion **616** of the catch member **600**, and threaded portion **614** of the delivery wire **605** and the threaded portion **612** of the catch member **600**. Because threaded portions **613** and **616** have a smaller pitch than threaded portions **612** and **614**, this results in the proximal end **602** advancing in the direction, indicated by arrow A relative to the delivery wire **605**, faster than the distal end **603**. Bump **601** of the catch member **600** is therefore elongated, and the catch member **600** is reduced to its delivery profile. The resultant configuration is illustrated in FIG. **43**B.

[**0107**] FIG. **43**B illustrates the catch member in the delivery stage of the deployment process. In this delivery configuration, bump **601** is reduced to a lower-profile configuration, allowing for a device, such as an occluder, to slide more easily over bump **601**. In this configuration, with the delivery wire **605** still attached, the catch member **600** could temporarily catch the occluder during its deployment with its proximal section of larger diameter. This may be useful during deployment, retrieval, repositioning or evaluation of deployment of an occluder. Once this is satisfactory, the delivery wire **605** can be removed by withdrawing it proximally. Removal of the delivery wire **605** results in the proximal end **602** moving in direction B faster than the distal

end **603**, creating the high-profile configuration of bump **601** as illustrated in FIG. **44**. Generally, it may be desirable that this be accomplished in 1-10 turns, more preferably within 3-5 turns. Examples of suitable pitches include 0.011 inch pitch for threaded portion **613** of the catch member **600** and threaded portion **616** of the threaded wire **605**, and 0.030 inch pitch for threaded portion **612** of the catch member **600** and threaded portion **614** of the threaded wire **605**, or 0.011 inch pitch for threaded portion **613** of the catch member **600** and threaded portion **616** of the threaded wire **605**, and 0.025 inch pitch for threaded portion **612** of the catch member **600** and threaded portion **614** of the threaded wire **605**.

[**0108**] FIG. **44** illustrates the catch member once the delivery wire has been detached and removed, creating a permanent catch for the occluder at its deployed configuration. As a result of the pressure on bump **601**, exerted by the proximal end of the occluder to be caught, proximal end **602** of the catch member **600** may constrict, for example at threads **612**, and create a permanent catch. Alternatively, the material may provide sufficient stability to allow the bump to maintain the device in the delivered configuration.

[**0109**] Materials suitable for use with this embodiment include materials that are able to be easily deformed, for example metals, alloys, polymers, or combinations of these and similar materials. Examples include, but are not limited to, bioabsorbable polymers such as polyhydroxyalkanoate compositions such as poly-4-hydroxybutyrate, bioabsorbable metals such as iron and magnesium.

[**0110**] FIG. **45**A illustrates a step in the manufacture of the catch member according to one aspect of the disclosure. Catch tube **502** is illustrated with lumen **503**, steps **510**, tabs **514** and lumens **505**, located at the proximal side **506** of the catch member. Tabs **514** and steps **510** can be made of the same piece of material as catch tube **502**, or they can be separate pieces made from the same, or different material. The vertical spacing between steps **510** is equal or slightly larger than the height of tabs **514** to allow tabs **514** to slide between steps **510** without leaving more than a minimal clearance between steps **510** and tabs **514**. Bump **504** (e.g. as shown in FIG. **45**B) can be created, for example by compressing the proximal and distal ends **506** and **508**, respectively, of the catch tube during annealing, similar to a scheme illustrated in FIG. **33**.

[**0111**] FIG. **45**B illustrates an embodiment of the catch member in a permanent catch configuration. Bump **504** has an outside diameter D_1, which is larger than diameter of tube **502**. Alternate bump configurations, including, but not limited to arms, barbs or other protrusions, are also encompassed by this disclosure. Tabs **514** are preformed, for example by annealing, into a curvilinear shape (although other suitable shapes also possible), such that when the catch member is not in contact with any other object (such as a delivery wire or an occluder), tabs **510** slide between steps **510** through lumen **505**, so that tab tips **515** protrude into lumen **503**. One function of tab tips **515** protruding into the lumen is to prevent the bump **504** from being compressed. This configuration can provide a permanent catch. This configuration is further illustrated in FIG. **45**D, which is a view along lines **45**D-**45**D in FIG. **45**B. Another view of the same configuration is illustrated in FIG. **45**F, which is a view along lines **45**F-**45**F in FIG. **45**D. FIG. **45**H is a view along lines **45**G-**45**G in FIG. **45**D. FIG. **45**H illustrates how tabs **514** prevent compression of the proximal side of the catch member **506** by sliding between steps **510**. Therefore, application of pressure on bump **504** does not result in a substantively compressed configuration, also referred to as the temporary catch configuration, illustrated in FIGS. **45**C, **45**E, **45**G and **45**I.

[**0112**] A temporary catch configuration may be desired during deployment, retrieval, repositioning or evaluation of deployment of a device, such as an occluder. As illustrated in FIG. **45**C, the proximal end of the catch member **506** can be compressed in a direction that reduces the volume of lumen **503**. The vertical dimension of lumens **505** is larger than the height of tabs **514**, to allow for compression of lumens **505** when tabs **514** (or tab tips **515**) occupy lumens **505** as illustrated. This compressed configuration enables a device, or a portion of a device, such as a proximal portion of an occluder **520** with an inner diameter D_4, to reversibly slide over bump **504** by exerting enough force on bump **504** to compress the proximal side **506** of the catch member. In the compressed configuration, bump **504** has an outer diameter D_2, which is smaller than diameter D_1 (illustrated in FIG. **45**B). A temporary catch configuration generally requires that the distal end of the delivery wire (not shown) occupies the distal portion of lumen **503**.

[**0113**] FIG. **45**E is a view along lines **45**E-**45**E in FIG. **45**C, which further illustrates the temporary catch configuration. Delivery wire **516** is attached to the catch member and occupies a portion of lumen **503**. Tab tips **515** rub against the delivery wire **516** and are pushed out of lumen **503** as illustrated. The curvilinear shape of tabs **514** results in tabs **514** curving around the outside of steps **510**, allowing the proximal side of the catch member **506** to be compressed so that bump **504** has outside diameter D_2. This configuration is further illustrated in FIG. **45**G, which is a view along lines **45**G-**45**G in FIG. **45**E. FIG. **45**I illustrates how tabs **514** allow compression of the proximal side of the catch member **506** by being positioned outside of steps **510**. Therefore application of pressure on bump **504** will result in a compressed configuration.

[**0114**] In embodiments of the invention, including the embodiments specifically illustrated and described herein, the catching configuration can be temporary or permanent. A temporary catch configuration generally allows for the catch member to release, while a permanent catch configuration generally is not designed for release. Certain embodiments have both a temporary catch configuration, which allows for confirmation of proper deployment, and a permanent catch configuration, that is engaged when proper deployment is confirmed. A permanent catch configuration can, for example, have a greater diameter at the proximal end of the catch member than a temporary catch configuration and may be engaged only after the device has been properly positioned. A temporary catch configuration is generally preferred during evaluation and repositioning of a device, such as an occluder, while a permanent catch configuration is generally preferred once the device is deployed.

[**0115**] The embodiments and techniques described here are described preferably for use with a device made of a polymer and formed from a single tube, such that the tube is a single monolithic material. The catch mechanism can be all or partly monolithic or integral with the tubular structure, or there can be an absence of any type of bonding or rigid

connection to the rest of the tubular structure, in which case there may be some spring force or other force that holds the locking mechanism in place. While the device is thus shown as being substantially formed from a single tubular body, the catch mechanism as described in the embodiments above could be used with other types of devices, including those formed from many pieces, and including devices formed from other materials, including metals, polymers, stainless steel or nitinol.

[0116] The term "bioabsorbable," as used in the description above, is also understood to mean "bioresorbable."

[0117] While the description above refers to wires, and while the term "wire" might convey a more rigid piece than a string, a suture or a filament, all these terms are essentially interchangeable, and further include embodiments in which the wire, string, suture or filament is a hollow tube or conduit to allow another wire, as needed, to pass through its longitudinal axis. Each wire, string, suture and filament can be composed of one or more wires, strings, sutures and filaments.

[0118] In cases in which the device is made of a polymer, it can be desirable to add an additive or coating to the material to make it radiopaque to make it more visible in a wider variety of imaging techniques.

[0119] It will be appreciated that while a particular sequence of steps has been shown and described for purposes of explanation, the sequence may be varied in certain respects, or the steps may be combined, while still obtaining the desired deployment or in some cases to effect deployment in a particular way. For example, the delivery sheath may be advanced or retracted at varying times and in varying degrees, the proximal and distal portions of the occluder may be deployed into the petal configuration in a different sequence, etc. In addition, the steps could be automated.

What is claimed as new and desired to be protected by Letters Patent of the United States is:

1. A collapsible medical device for occluding an aperture in a body, the medical device having a first configuration with a reduced profile and a second configuration with an expanded profile, the medical device being adapted to be delivered through a delivery system into a desired delivery location, the medical device comprising:

a proximal side and a distal side;

an occluder portion movable between the first and second configurations; and,

a catch system for holding the medical device in the second configuration including a catch member with at least one arm disposed near the proximal end of the catch member, such that during deployment, the proximal end of the catch member is adapted to pass through an inner passageway of the occluder while the arm is depressed and to secure the device in the second configuration when the arm protrudes outside an outer diameter of the catch member.

2. The device of claim 1, wherein the arm is formed by cutting two parallel axial slits and one transverse slit into the catch member.

3. The device of claim 2, wherein the arm includes a bend and the bend causes the device to be secured in the second configuration.

4. The device of claim 3, wherein the arm is pre-conditioned in a bent position.

5. The device of claim 4, wherein the arm is pre-conditioned by annealing.

6. The device of claim 2, wherein the tip of the arm secures the device in the second configuration.

7. The device of claim 6, wherein the arm is straight.

8. The device of claim 6, wherein the arm is bent.

9. The device of claim 6, wherein the arm is bent into a V-shape.

10. The device of claim 2, wherein the catch system provides a permanent catch.

11. The device of claim 10, wherein the catch system further provides a temporary catch for use during deployment of the device.

12. A collapsible medical device for occluding an aperture in a body, the medical device having a first configuration with a reduced profile and a second configuration with an expanded profile, the medical device being adapted to be delivered through a delivery system into a desired delivery location, the medical device comprising:

a proximal side and a distal side;

an occluder portion movable between the first and second configurations; and, a catch system for holding the medical device in the second configuration including a catch member formed from a tube having a transverse, angled slit in the proximal side, such that during deployment, the proximal end of the catch member is adapted to pass through an inner passageway of the occluder while the tube is straight and to secure the device in the second configuration when the tube is bent at the cut.

13. The device of claim 12, wherein the slit is angled about 45 degrees from a longitudinal axis of the catch member.

14. The device of claim 12, wherein the catch member has a first axis and the proximal portion of the catch member when bent at the cut has a second axis at an angle to the first axis, and wherein the second axis is at an angle of approximately 90 degrees from the first axis.

15. A collapsible medical device for occluding an aperture in a body, the medical device having a first configuration with a reduced profile and a second configuration with an expanded profile, the medical device being adapted to be delivered through a delivery system into a desired delivery location, the medical device comprising:

a proximal side and a distal side;

an occluder portion movable between the first and second configurations; and,

a catch system for holding the medical device in the second configuration including a catch member with two matched transverse slits in the proximal side such that during deployment, the proximal end of the catch member is adapted to pass through an inner passageway of the occluder and to secure the device in the second configuration when the portion defined by the two slits forms a protrusion.

16. The device of claim 15, wherein the protrusion is defined by reducing the axial length of the catch member and annealing.

17. The device of claim 15, further comprising an inner threaded portion for receiving a delivery wire and a stopper

element disposed inside the tube for stopping the delivery wire when being screwed into the inner threaded portion.

18. The device of claim 15, wherein the protrusion is biased in the proximal direction.

19. The device of claim 15, wherein the protrusion is biased in the distal direction.

20. The device of claim 15, wherein the slits are angled relative to a longitudinal axis of the catch member.

21. The device of claim 15, wherein the protrusion is twisted relative to the longitudinal axis of the catch member.

22. A collapsible medical device for occluding an aperture in a body, the medical device having a first configuration with a reduced profile and a second configuration with an expanded profile, the medical device being adapted to be delivered through a delivery system into a desired delivery location, the medical device comprising:

a proximal side and a distal side;

an occluder portion movable between the first and second configurations; and,

a catch system for holding the medical device in the second configuration including a catch member having a first outer diameter closer to the proximal end and having a second outer diameter further from the proximal end that is smaller than the first outer diameter, such that during deployment, the proximal end of the catch member is adapted to pass through an inner passageway of the occluder and to secure the device in the second configuration when a proximal end of the device catches on the first outer diameter.

23. The device of claim 22, wherein the catch member includes threads with two different pitches and the second outer diameter corresponds to threads with a first pitch.

24. The device of claim 22, further comprising a bump around the circumference of the catch member, wherein the first outer diameter corresponds to a diameter of the bump.

25. A collapsible medical device for occluding an aperture in a body, the medical device having a first configuration with a reduced profile and a second configuration with an expanded profile, the medical device being adapted to be delivered through a delivery system into a desired delivery location, the medical device comprising:

a proximal side and a distal side;

an occluder portion movable between the first and second configurations; and,

a catch system for holding the medical device in the second configuration including a generally tubular catch member with a proximal portion and a proximal end, having a raised portion around its outer circumference on the proximal portion, tabs axially extending toward the raised portion, and a planar lumen intersecting the proximal end of the catch member, such that during deployment, the proximal end of the catch member is adapted to pass through an inner passageway of the occluder and to temporarily secure the device in an intermediate configuration by compression of the lumen and to secure the device in the second configuration when a proximal end of the device engages the raised portion, the engagement with the raised portion being secured by the tabs.

* * * * *