United States Patent [19]

Klamer

[11] **Patent Number: Des. 288,109**

[45] **Date of Patent: ** Feb. 3, 1987**

[54] **ROLLER SKATE**

[75] Inventor: **Reuben B. Klamer,** Los Angeles, Calif.

[73] Assignee: **The Quaker Oats Company,** Chicago, Ill.

[*] Notice: The portion of the term of this patent subsequent to Jan. 27, 2001 has been disclaimed.

[**] Term: **14 Years**

[21] Appl. No.: **547,647**

[22] Filed: **Nov. 1, 1983**

[52] **U.S. Cl.** **D21/226**

[58] **Field of Search** ..... D21/226, 227; 280/11.1 R, 11.19, 11.20, 11.27, 11.28

[56] **References Cited**

U.S. PATENT DOCUMENTS

D. 106,323	10/1937	Norman	D21/226
D. 180,333	5/1957	Jones et al.	D21/226
D. 188,333	7/1960	Budd	D21/226
D. 191,363	9/1961	Williams	D21/226
D. 240,952	8/1976	Roche	D21/226

Primary Examiner—Charles A. Rademaker

Attorney, Agent, or Firm—Cushman, Darby & Cushman

[57] **CLAIM**

The ornamental design for a roller skate, as shown and described.

DESCRIPTION

FIG. **1** is a top plan view of a roller skate showing my new design;

FIG. **2** is a left side elevational view thereof;

FIG. **3** is a bottom plan view thereof;

FIG. **4** is a rear elevational view thereof;

FIG. **5** is a right side elevational view thereof; and

FIG. **6** is a front elevational view thereof.

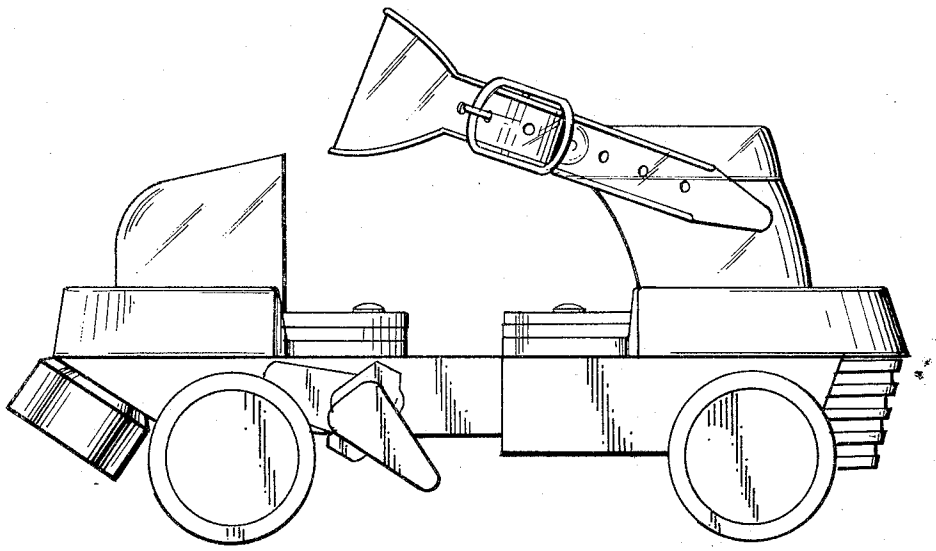

Fig. 1

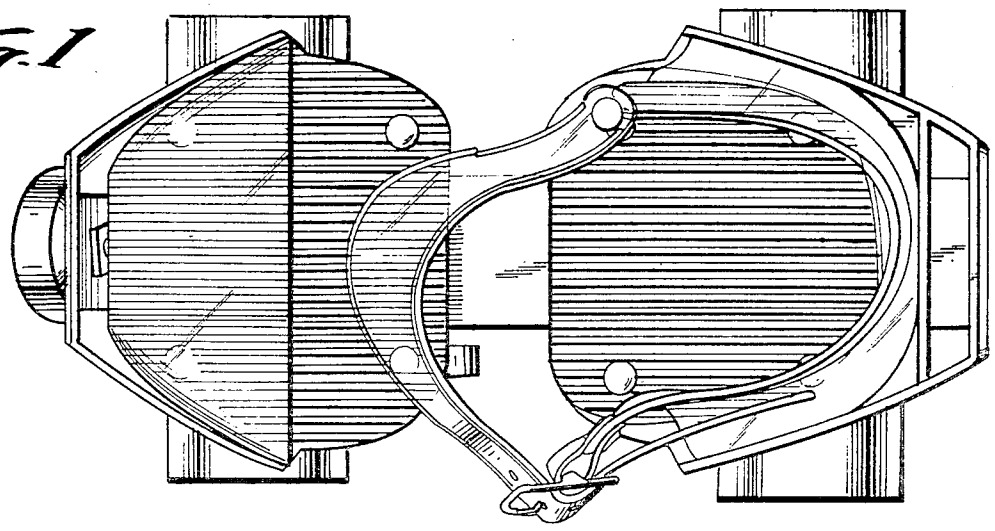

Fig. 2

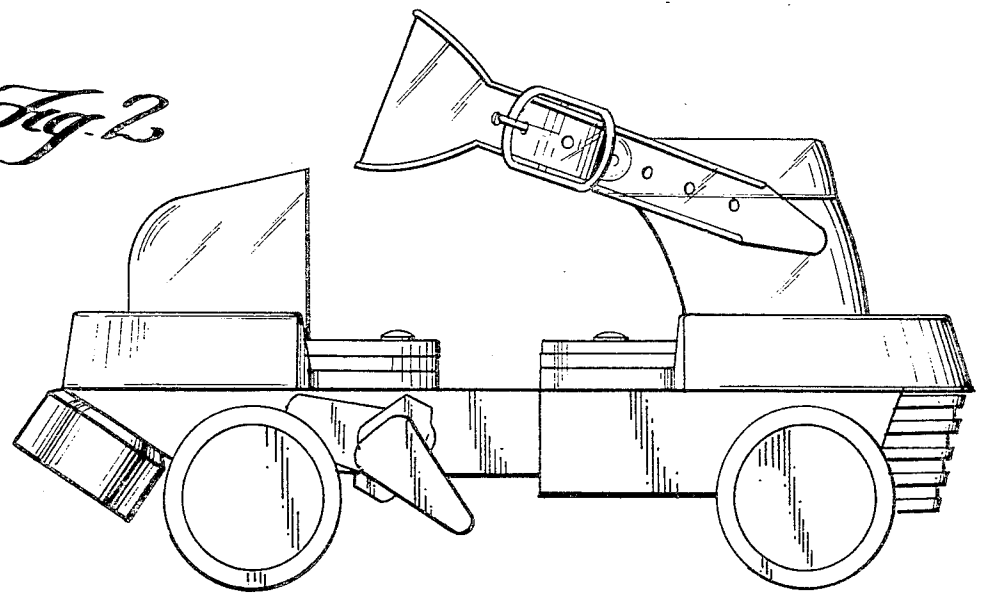

Fig. 3

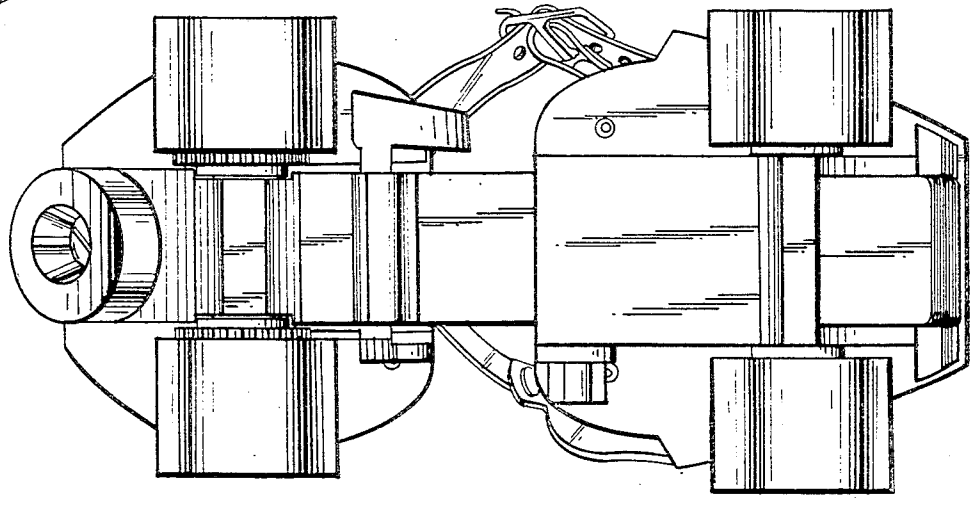

Fig. 4

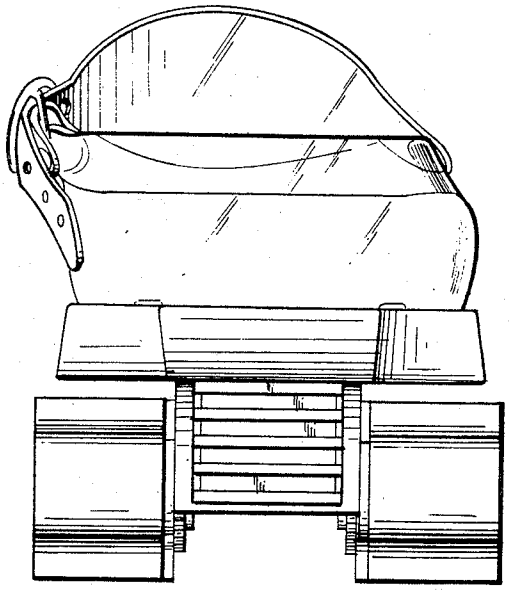

Fig. 5

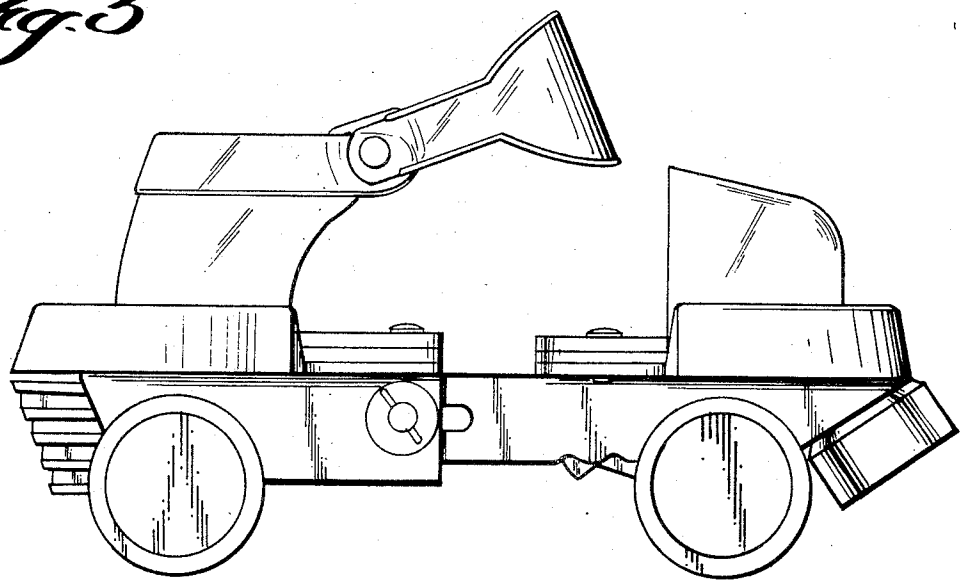

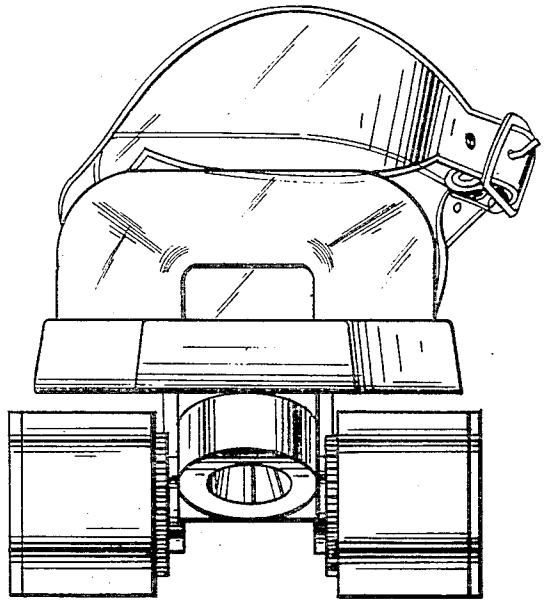

Fig. 6