(No Model.)

2 Sheets—Sheet 1.

P. H. JACOBUS.

CAR CHUCK.

No. 590,662. Patented Sept. 28, 1897.

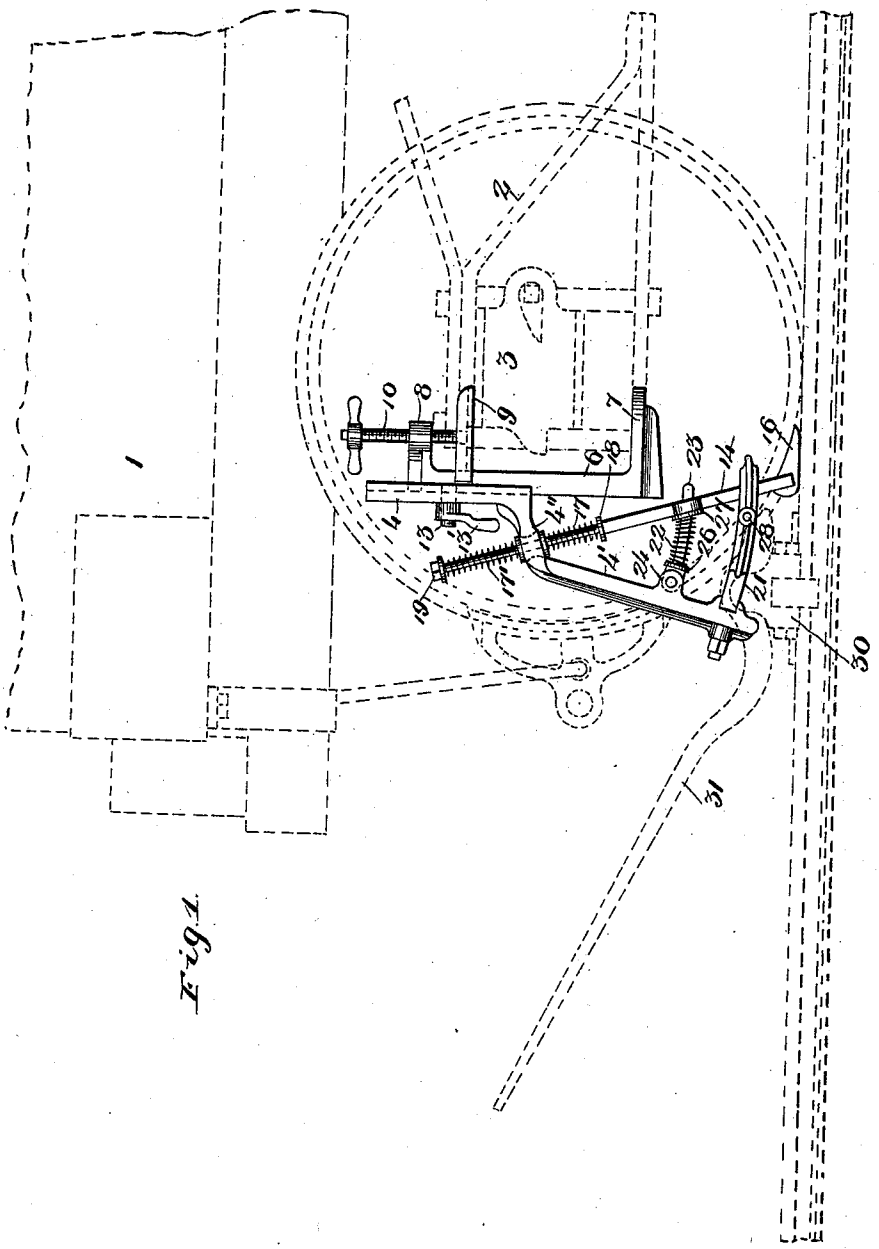

Fig. 1.

Witnesses
Alfred A. Mathey
Lee Sale

Inventor
Peter H. Jacobus.
By his Attorneys
Keller & Starek

THE NORRIS PETERS CO., PHOTO-LITHO., WASHINGTON, D. C.

(No Model.) 2 Sheets—Sheet 2.

P. H. JACOBUS.

CAR CHUCK.

No. 590,662. Patented Sept. 28, 1897.

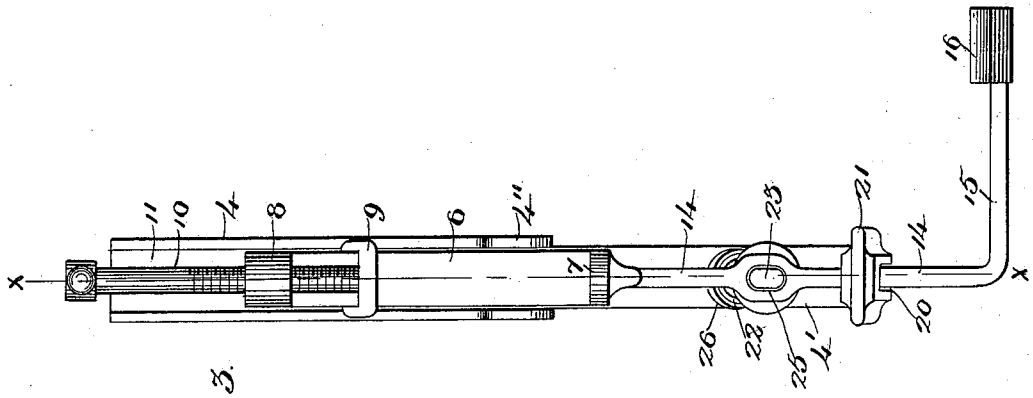

Fig. 3.

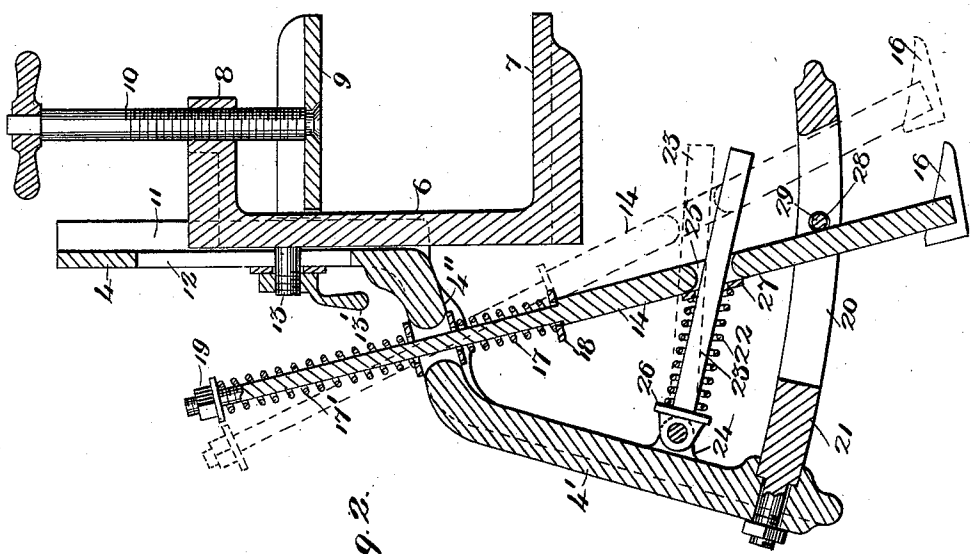

Fig. 2.

Witnesses
Alfred A. Mathey
Lee Sale

Inventor
Peter H. Jacobus.
By his Attorneys
Keller & Starek

THE NORRIS PETERS CO., PHOTO-LITHO., WASHINGTON, D. C.

UNITED STATES PATENT OFFICE.

PETER HENRY JACOBUS, OF MILLSTADT, ILLINOIS.

CAR-CHUCK.

SPECIFICATION forming part of Letters Patent No. 590,662, dated September 28, 1897.

Application filed May 20, 1897. Serial No. 637,395. (No model.)

To all whom it may concern:

Be it known that I, PETER HENRY JACOBUS, a citizen of the United States, residing at Millstadt, in the county of St. Clair and State of Illinois, have invented certain new and useful Improvements in Car-Chucks, of which the following is a full, clear, and exact description, reference being had to the accompanying drawings, forming a part hereof.

My invention has relation to improvements in car-chucks; and it consists in the novel arrangement and combination of parts more fully set forth in the specification and pointed out in the claims.

In the drawings, Figure 1 is a side elevation of one end of a car with my improvement attached thereto and showing the wedge or chuck proper in operative position against the wheel. Fig. 2 is a side section of the device detached on line *x x* of Fig. 3, showing the chuck-carrying arm both in its operative and in its retracted position; and Fig. 3 is an end view of the device detached.

The object of my invention is to construct a chuck to be temporarily connected to a freight, passenger, or other car and which as the car is shoved along from one point to another will always be in position to wedge the wheels of the truck against any possible return movement of the car after the latter has once been shifted.

The chuck is especially serviceable on upgrades, where there is particular danger of the car rolling back and injuring the operator. It is generally employed in connection with any approved form of car-mover, thereby saving the "bite" of the latter, which bite, without the presence of the chuck, would necessarily be called into service to check the return motion of the car.

In detail the device may be described as follows:

Referring to the drawings, 1 represents an end of a freight-car, 2 the truck, and 3 the oil-boxing. The chuck as a whole comprises a suitable curved frame or arm 4 4′ 4″, extending to within a short distance above the rail, said arm being adapted to be clamped to the boxing 3 by means of a bracket comprising a vertical member 6, a lower inwardly-directed arm 7, and an upward parallel arm 8, said bracket carrying a sliding jaw 9, the latter being operated by means of a screw 10, passed through the arm 8 and connected to the sliding jaw, the latter being guided along the member 6 by causing the inner end of the jaw to embrace the sides of said vertical member. The bracket 6 7 8 is adjustable along the inner surface of the upper extension 4 of the frame, the said surface having formed thereon a suitable groove or depression 11 for the reception of the vertical member 6 of the bracket, and the arm 4 being further provided with a longitudinal slot 12 for the reception of a screw-threaded bolt 13, projecting from the rear face of the member 6, the latter being, when once properly and vertically adjusted along the arm 4, (according to the height of the truck of the car,) firmly secured to the arm 4 by the tightening-lever 13′, passed over the screw-threaded end of said bolt, the said lever being firmly driven home against the rear face of the arm 4.

Loosely passing through the diagonal portion 4″, connecting the portions 4 and 4′ and normally inclined toward the truck, is the chuck-carrying arm 14, the lower end having an inwardly-deflected portion 15, carrying the block, wedge, or chuck proper, 16. The reduced portion of the arm 14, which passes through the arm 4″, is encircled by an inner coiled spring 17, whose lower end is adapted to bear against a loose collar or ring 18, resting at the base of said reduced portion, and whose upper end bears against the under surface of the part 4″. It is further encircled by an outer coiled spring 17′, whose upper end bears against the terminal nut 19, passed over the free screw-threaded end of said arm 14, and whose lower end bears against the upper surface of the arm 4″. The lower end of the chuck-carrying arm is guided by the walls of a slot 20, formed in a guide-bar 21, secured at the lower end of the arm 4′. The normally inwardly inclined position of the arm 14 is maintained by the resilient and expansive action of a coiled spring 22, encircling a stem 23, pivoted to swing in a vertical plane between the lugs 24, carried by the arm 4′ above the guide-bar 21, the free end of the stem projecting loosely through an opening 25, formed in the arm 14, and the spring 22, having one end bearing against a basal collar 26 of the stem and the opposite end bearing against the arm

14, or better, a washer 27, interposed between it and the spring. The spring 17 tends to force the arm 14 inwardly, the spring 17' tends to draw it outwardly, and the spring 22 tends to swing the same inwardly toward the wheel of the truck, so that whatever may be the irregularities of the surface passed over or however the arm may be deflected from its normal position during the shoving of the car the tendency of the several springs will be to always return the said arm to its normal position and force the wedge carried thereby in proximity to the rail and tread of the wheel. The several springs, too, being yielding permit the chuck to follow the car over any kind of surface passed over.

The walls of the slot 20 are provided with alining openings 28, through which a pin 29 can be passed, and when the device is first attached to the truck the arm 14 is swung outwardly against the resilient action of the spring 22 into a position to the inside of the openings 28, and the pin 29 is inserted through them, thus holding the arm temporarily in said position, (see Fig. 2, in which the dotted position of the arm represents its operative and released position,) when upon the withdrawal of the pin after the device is once attached to the truck the spring 22 will force the chuck close to the rail and tread of the wheel resting on it. I have shown the device in connection with a car-mover 30. As the operator moves the car along by means of the lever 31 the chuck or wedge 16 follows up the wheel and there is no possibility of the car rolling back.

It is apparent that minor changes might be made in the details without departing from the spirit of my invention.

Having described my invention, what I claim is—

1. In a car-chuck, a suitable arm or frame adapted to be temporarily secured to the car, a chuck-carrying arm yieldingly carried thereby, a guide for said arm and a chuck or block carried by the chuck-carrying arm and adapted to be automatically interposed and normally held in proximity to and between the rail and wheel during the motion of the car, substantially as set forth.

2. In a car-chuck, a suitable frame or arm adapted to be temporarily secured to the car, a chuck-carrying arm yieldingly carried thereby, a guide for said arm, means for automatically bringing the chuck or block carried by the chuck-carrying arm into engagement with the wheel and rail, and means for temporarily retracting the same out of engagement, substantially as set forth.

3. In a car-chuck, a suitable arm or frame, an adjustable bracket carried thereby and adapted to be clamped in proximity to the wheel of the car, a chuck-carrying arm loosely mounted on the frame, a chuck or block carried at the lower end of the said arm, a spring for normally forcing the chuck into engagement with the wheel of the car, means for guiding the chuck-carrying arm to and from the car-wheel, and yielding connections between the frame and chuck-carrying arm for permitting the latter to yield under all conditions of the road passed over by the car, substantially as set forth.

4. A car-chuck comprising a suitable frame, an adjustable bracket carried thereby and adapted to secure the frame to the car, a chuck-carrying arm passing loosely through the frame, a spring coiled about the arm having one end bearing against the under surface of the frame and the opposite end connected to the arm, a second spring encircling the outer projecting end of the arm and having one end bearing against the outer surface of the frame and the opposite end connected to the arm, the said springs being located on opposite sides of the opening of the frame through which the chuck-carrying arm loosely passes, a lower slotted guide-bar carried by the frame for guiding the lower end of the chuck-carrying arm, a stem pivotally secured to the frame in proximity to the guide-bar, said stem passing loosely through an opening of the chuck-carrying arm, a spring encircling the stem and having one end bearing against the base of the stem and the opposite end cooperating with the chuck-carrying arm for forcing the latter normally in proximity to the car-wheel, and a chuck, wedge or block carried at the lower end of the chuck-carrying arm, the parts operating substantially as and for the purpose set forth.

In testimony whereof I affix my signature in presence of two witnesses.

PETER HENRY JACOBUS.

Witnesses:
A. C. KERN,
WM. PREUSSER.