April 21, 1953 R. M. REICHL 2,635,733

MATERIAL TREATING APPARATUS

Filed Jan. 22, 1949 3 Sheets-Sheet 1

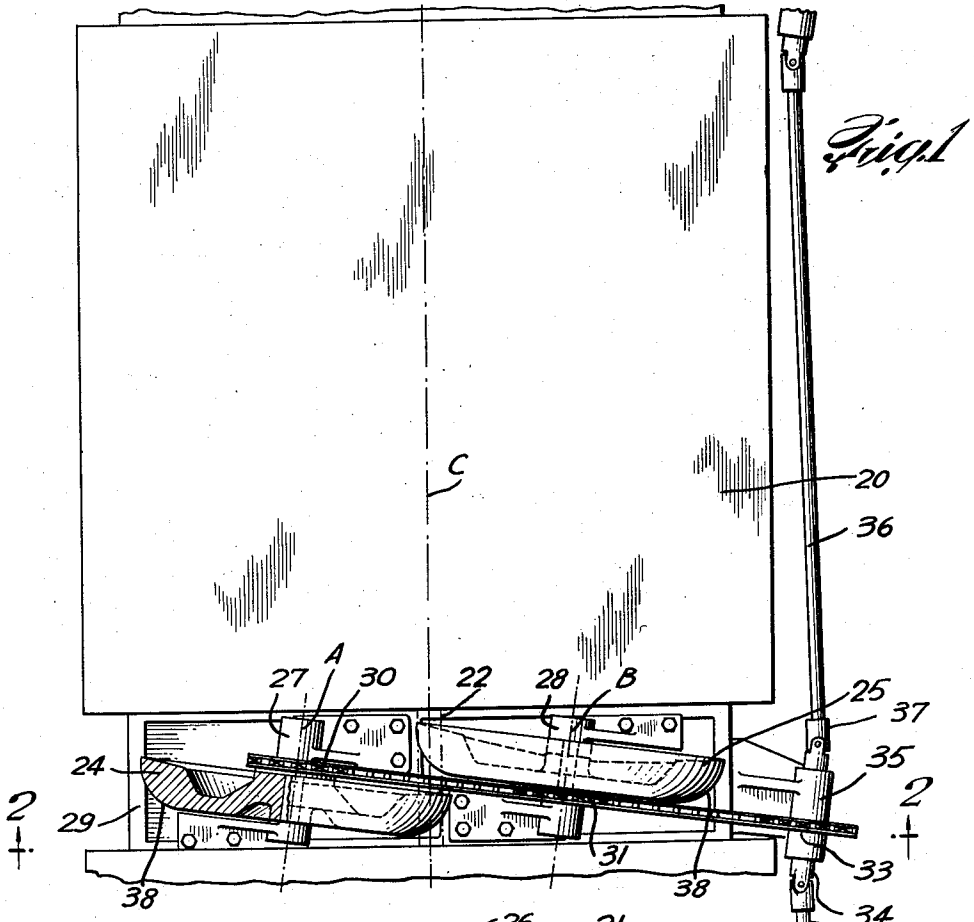

Fig. 1

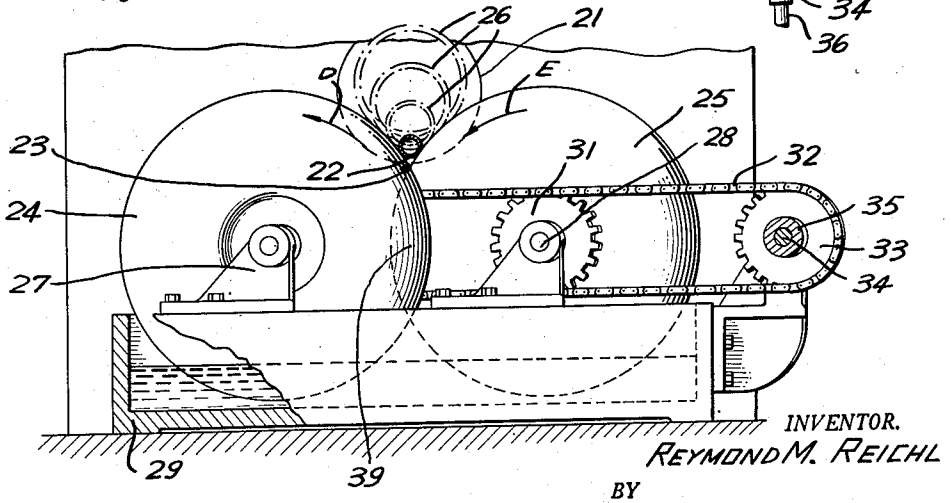

Fig. 2

INVENTOR.
REYMOND M. REICHL
BY
Hammond & Littell
ATTORNEYS

April 21, 1953 R. M. REICHL 2,635,733

MATERIAL TREATING APPARATUS

Filed Jan. 22, 1949 3 Sheets-Sheet 2

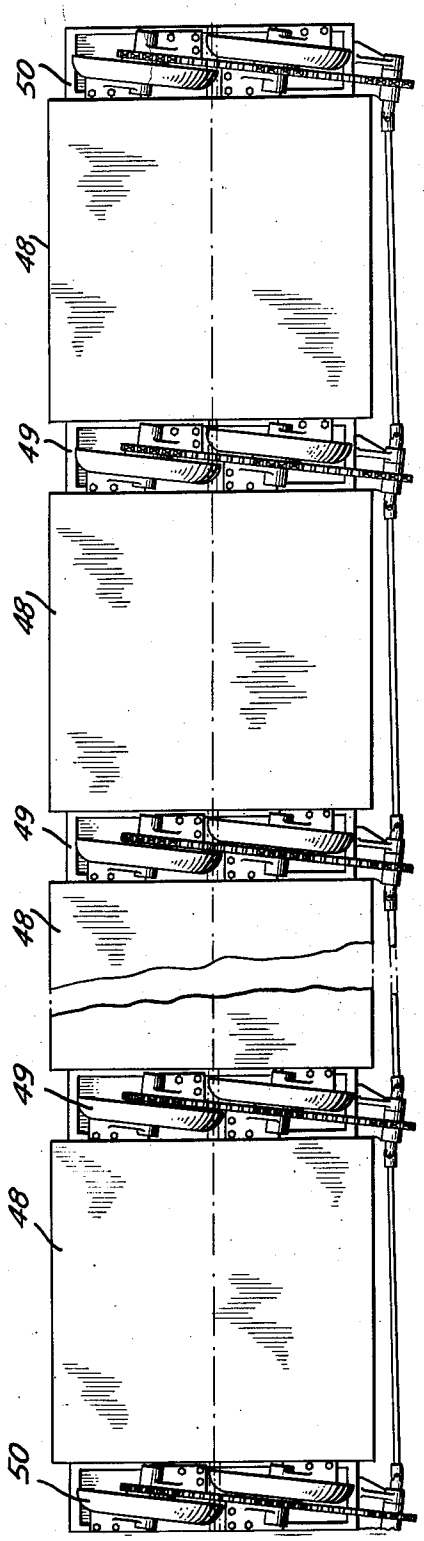

Fig. 3

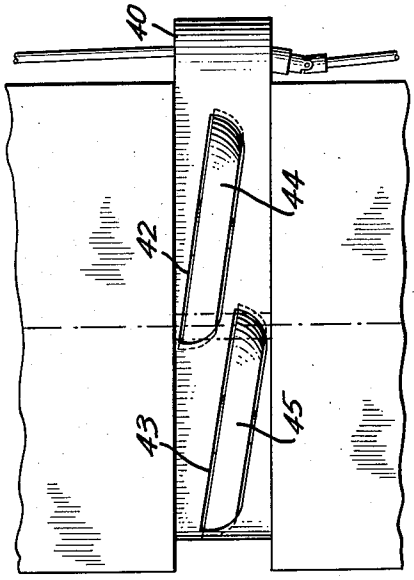

Fig. 5

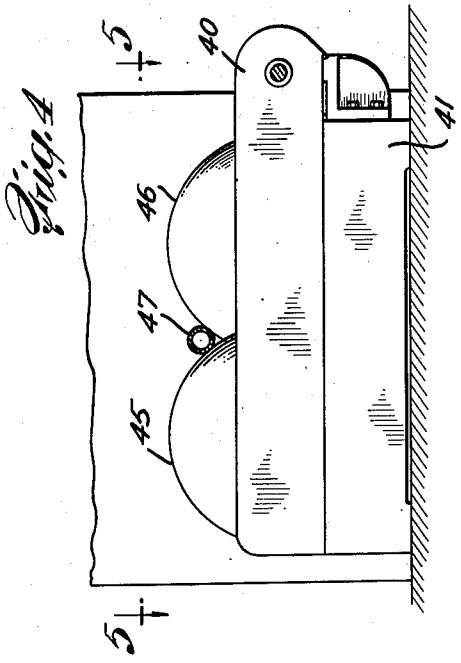

Fig. 4

INVENTOR.
REYMOND M. REICHL
BY
Hammond & Littell
ATTORNEYS

April 21, 1953 R. M. REICHL 2,635,733

MATERIAL TREATING APPARATUS

Filed Jan. 22, 1949 3 Sheets-Sheet 3

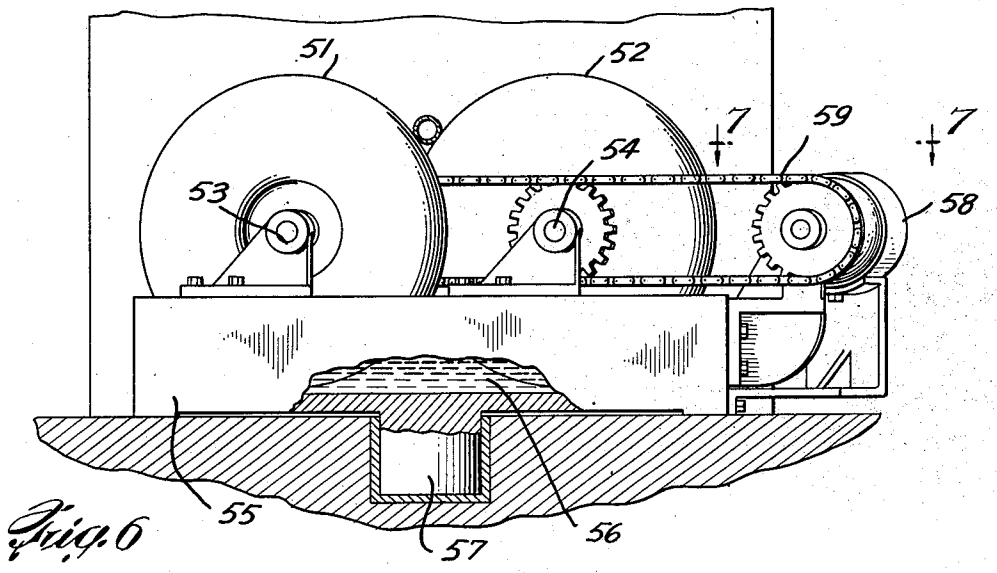

Fig. 6

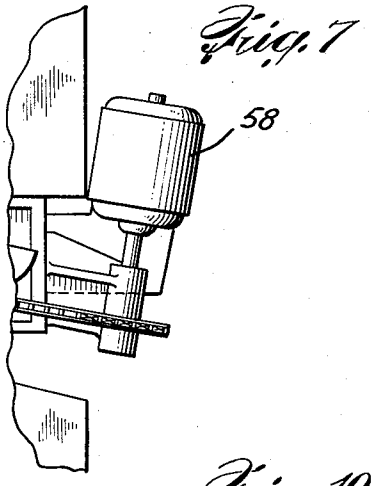

Fig. 7

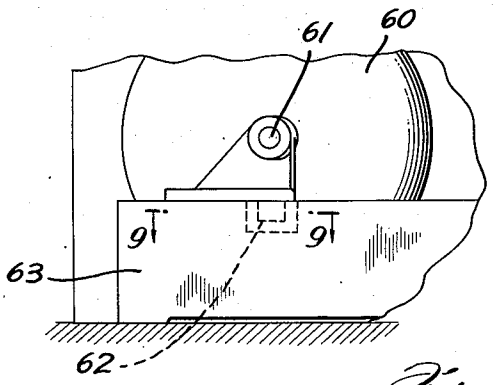

Fig. 8

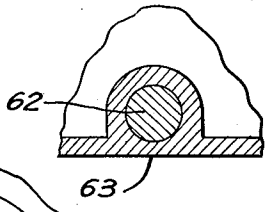

Fig. 9

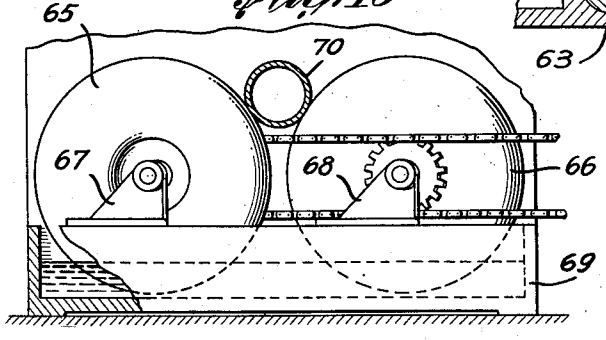

Fig. 10

INVENTOR.
REYMOND M. REICHL
BY
Hammond & Littell
ATTORNEYS

Patented Apr. 21, 1953 2,635,733

UNITED STATES PATENT OFFICE

2,635,733

MATERIAL TREATING APPARATUS

Reymond M. Reichl, Forest Hills, N. Y., assignor to Hydropress, Incorporated, New York, N. Y., a corporation of Delaware

Application January 22, 1949, Serial No. 72,180

9 Claims. (Cl. 198—127)

1

This invention relates to an apparatus for propelling and rotating round objects, such as tubes, through space, or through an apparatus wherein the tube is subjected to a treatment, such as heat.

Frequently, it is necessary to move a tube through a plurality of furnaces, said tube being revolved as it is moved through the furnace. The furnace is supplied with a heating medium for the purpose of subjecting the tube to a heat treatment or for other reasons. It is desirable to prevent the tube from cooling as it passes between furnaces and therefore the furnaces must be closely spaced with but little room available in which to place a propelling and turning mechanism.

In one use of the invention, furnaces are arranged in series, and the tubes are passed serially therethrough, there being suitable openings in the end walls to permit passage of the tube. The furnaces are operated so that flames protrude or shoot out from the openings through which the tube passes, so as to prevent cooling of the tube between furnaces. The flames can be arranged so that they substantially meet in the center of the space between the furnaces.

In prior devices, it has been difficult to arrange the bearings and elements to conform with the available small spacing between furnaces. It also has been difficult to arrange the bearings of the conveyor devices so that they are not subjected to the heat of the furnace, particularly in the aforementioned instance where the flames shoot out from the opening through which the tube passes. Difficulties also have been encountered in cooling of the propelling and turning mechanism.

One of the objects of the invention is to provide an improved arrangement for propelling and rotating round objects, such as tubes, through space or through a treating chamber, such as a furnace.

Another object of the invention is to provide an arrangement for turning and propelling tubes, which will fit between closely spaced furnaces or treating devices.

Another object of the invention is to provide a propelling and turning system which may be easily adjusted and driven.

One of the features of the invention is the provision of a pair of rotatable disc-like members arranged with their axes of rotation angularly disposed relative to the axis of the path of movement of a tube, or other round object, which is to be propelled and rotated thereby. The discs are

2

driven so that they rotate in the same direction and the centers spaced so as to define a notch-like indentation between peripheral edges thereof to receive a tube. The centers may be spaced less than the sum of the radii so that the edges overlap, or the centers may be spaced equal to or greater than the distance between the radii. It is possible to arrange the disc-like members so that the distance of their centers apart can be varied. In such an arrangement, the adjacent or inner edges of the discs are staggered. By making the discs relatively large, it is possible to have the bearings and journals therefor, remotely located relative to the tube or round object itself, and thus out of the path of any flames or other treating medium which might be present in the vicinity of the tube as it passes over the propelling and turning mechanism. The discs also may be arranged so that they pass through a cooling medium, such as a liquid in a tank or in the frame carrying the discs, a blast of air, or other cooling media. As a further protection, a cover may be provided having slots therein through which the upper operating parts of the discs protrude, thus serving as a further protection to the bearings and driving means for the discs.

In a preferred aspect of the invention, the edges of the discs may be rounded in the direction from which a tube is fed thereto. Also, the leading one of the staggered discs may be driven so that the inner or overlapping edge thereof moves upwardly. When a tube having a bent leading end, or other deformity, reaches the first disc, it will be guided up over the rounded portions and carried upwardly so that it may be propelled forwardly properly to the second disc and thus properly guided into the notch-like space between the discs.

A pair of discs can be driven by a chain, or other drive, connected to each of said discs and to a sprocket or pulley located at one side of the discs. Each disc, or pair of discs, may be driven by an individual motor. Preferably, a longitudinally extending driving mechanism having universal joints can be used to connect the various drive pulleys or sprockets for the purpose of driving the discs from one source of power.

In still another aspect of the invention, both discs can be mounted in their staggered relationship on a frame or base, said frame or base having a trunnion or other means permitting rotation of the frame so as to vary the inclination of the axes of the discs relative to the longitudinal axis of the propelled tube and thus vary the speed

and force with which the tubes are moved longitudinally. Arrangements also can be made for pivoting each one of the bearing supports for the discs so as to change individually the angles of the disc supports relative to the longitudinal axis of a propelled tube. In this latter modification, preferably, the arrangement should be tied together in such a manner that the discs will retain identical angular relationships with said longitudinal axis. The speeds of the discs and/or the angular relationship thereof relative to the longitudinal axis can be changed so as to vary the movement of the object by the propelling mechanism.

The invention is applicable to tubes, rods, and other types of shapes which are to be propelled and turned.

These and other features, objects and advantages of the invention will become apparent from the following description and drawings which are merely exemplary.

Figure 1 is a plan view showing a pair of discs mounted between two furnaces.

Figure 2 is a view partially in section taken along the line 2—2 of Figure 1.

Figure 3 is a plan view showing a plurality of furnaces with turning and propelling mechanisms made in accordance with the present invention.

Figure 4 is an elevation view generally similar to Figure 2 with a cover.

Figure 5 is a plan view taken in the direction of line 5—5 of Figure 4.

Figure 6 is an elevation view partially in section of a modified form of the invention showing one manner in which the inclination of the discs relative to a tube transported can be adjusted.

Figure 7 is a fragmentary plan view taken along the line 7—7 of Figure 6.

Figure 8 is a fragmentary elevation showing a modification wherein each journal support is adjustable separately.

Figure 9 is a fragmentary sectional view taken along the line 9—9 of Figure 8.

Figure 10 is an elevation view partially in section of a modified form of the invention.

The invention will be described particularly in conjunction with its use with a plurality of furnaces; it being understood however, that it may be used for other purposes and with or without treating mechanism in conjunction therewith.

Furnace 20 (Fig. 1) may be of any conventional type, such as one having an aperture 21 (Fig. 2) of the correct size to accommodate the particular tube, pipe or other shape, being passed therethrough. In Figure 2, a tube 22 is illustrated located in the V-like notch 23 between discs 24, 25. As shown in the dot dash lines 26, other size tubes may be accommodated. The discs 24 and 25 have bearing supports 27, 28 carried on a frame 29. Frame 29 may have a suitable coolant contained therein such as water, or other cooling medium. It also is evident that other means of cooling may be employed such as a blast of air. The longitudinal axes or axes of rotation A, B of the discs are angularly disposed relative to the longitudinal axis C of the path of movement of the tube being propelled. It is evident that the transverse plane of the disc also is angularly disposed relative to the longitudinal axis C. Each of the discs 24, 25 may have a sprocket or pulley 30, 31 connected therewith, said sprockets being connected by a chain or other connecting mechanism 32 with the main drive sprocket or pulley 33, said main drive means 33 being mounted on shaft 34 carried in journal 35. Drive shafts 36 may be connected by means of universal joints 37 to the drive sprocket 33 and thus provide for a common drive for the various propelling and turning devices as will be described hereafter.

The peripheral surfaces 38 of the discs are given a relatively long radius for the purpose which will appear hereafter, said rounded surfaces facing the direction in which the tube approaches the discs. It is to be noted that the bearings for discs 24, 25 are so located that the discs are staggered in the area 39 and thus provide a suitable V notch arrangement through which a tube is guided.

In a preferred form, the outer disc 24 rotates in a counterclockwise direction as indicated by arrow D (Fig. 2) or so that the edge thereof overlapping the other disc rotates in an upwardly direction. The other disc rotates in the direction shown by arrow E (Fig. 2). In such an arrangement, the end of a bent tube approaching the discs, will contact the rounded peripheral surface thereof and thus be guided into the notch between the discs. By having the outer or first disc rotating in the direction shown, the end of the tube also will be assisted in its movement into said notch because of the upward lifting movement exerted by said disc on the end of the tube. Due to the rotation of the discs and the force exerted on the surface of the tubes in a longitudinal direction, the tubes will be both rotated and propelled forwardly so that they will have a spiral movement.

By the use of discs of a relatively large diameter and spaced as indicated, the surface of the tube will have an improved frictional contact therewith so as to be properly turned and propelled.

The disc arrangement may have a cover 40 mounted on the base 41, said cover having slots 42, 43, through which discs 44 and 45 respectively, project, the propelled tube being indicated at 47 (Fig. 4). The cover 40 shields the drive mechanism and thus protects the drive mechanism bearings and a large portion of the discs from radiant heat or flames which may be playing upon the tube as it passes between furnaces. It also is evident that the cover will protect the driving mechanism and bearings from foreign matter.

In one use of the invention, a plurality of furnaces 48 (Fig. 3) or other treating devices, may have propelling mechanisms 49 located therebetween, said propelling mechanisms being located in the relatively narrow space between the furnaces. Propelling mechanisms 50 may be provided at each end of the furnace combination. Other types of propelling and support devices also may be located at either end thereof and these may include suitable feed apparatus for carrying tubes to the first propelling and turning device. It is apparent that use of the propelling and turning mechanism shown in the previous figures permits location thereof between the furnaces and protection thereof from undesirable heat and flames therebetween.

It is sometimes desirable to provide for adjustment of longitudinal movement and rotation of the pipe. This can be accomplished by mounting discs 51, 52 (Fig. 6) in bearings 53, 54, said bearings being carried by turnable frame 55. Frame 55 may have a coolant 56 therein as in the previously described forms. Frame 55 has a trunnion 57 upon which the frame with the discs can be turned as a unit. The frame can be shaped or the space between the furnace arranged so as

to allow the desired pivotal movement of the frame 55.

In the form shown in Figure 6, an individual electric motor 58 can be provided to drive the driving mechanism 59. Any type of suitable frame turning mechanism may be used to rotate the frame and various types of bearings or guides can be employed. By changing the angle of the discs and/or the speed thereof, the relative forward movement and rotation of the propelled tube can be varied as needed.

Adjustment of the angular relationship also can be accomplished by pivotally mounting each bearing support for the discs (Figs. 8 and 9). As an example, disc 60 may be carried in bearing support 61, said bearing support being mounted in a trunnion 62 carried by frame 63. In this form, arrangement must be made to drive the discs individually or through a flexible drive, such as belts, to permit the turning of the discs.

The speed of the drive pulley and shaft can be varied in any conventional manner. If the drive shaft is rotated by an electric motor, the motor can be suitably controlled by speed control apparatus. Similarly, individual drive motors can be controlled.

A further modification is shown in Figure 10 wherein discs 65, 66 are in staggered relationship carried by bearing supports 67, 68 on frame 69. The distance between the bearings is such that the sum of the radii of the two discs is less than the distance between said centers. The tube 70 is supported on the disc in a manner similar to the previous forms. The bearing supports 67 and 68 may be laterally adjustable so as to regulate the height of the center of tube 70. It is evident that with a given size tube, as the distance between the centers is increased, that the center of the tube will be lowered and vice versa. Thus, with varying tube sizes, the center of the tube can be maintained at a given height by varying the distances between the disc-like elements.

The disc-like elements may be of any desired material such as steel, or other material resistant to the particular use for which the propelling mechanism is to be employed. In the form shown, the disc is dish-shaped (Fig. 1) in character but may take various forms and exterior profiles. The bearings also may be mounted in different manners and the frame and drive mechanism does not have to follow necessarily that precisely shown. These and other variations may be made in the construction without departing from the spirit of the invention except as defined in the appended claims.

I claim:

1. In a device adapted to propel and turn tubes or the like, the combination comprising a frame, a pair of disc-like rotatable elements mounted on said frame and having surfaces for contacting a tube to be propelled and turned, the axes of said disc-like elements being angularly disposed relative to the path of said tube, adjustable mounting means on said frame for each of said disc-like elements, said mounting means being adjustable individually for changing the angular relationship of said elements relative to said tube path without changing the position of said frame relative thereto, and adjustable driving means connected to said discs, whereby the forward and turning movement of said tube may be varied.

2. In a device adapted to propel and turn tubes or the like, the combination comprising a frame having a receptacle for receiving a liquid, a pair of rotatable elements having rounded peripheral edges for receiving a tube in a notch-like indentation therebetween, means mounting said elements on said frame, said receptacle being adapted to receive a cooling medium through which said elements pass, said elements being angularly disposed relative to the path of said tube, and means driving said elements in the same direction, so as to propel and turn a tube thereon.

3. In a device adapted to propel and turn tubes or the like, the combination comprising a frame having a cooling medium receptacle, a pair of disc-like rotatable elements arranged in overlapping relationship so as to provide peripheral edges in a notch-like indentation for receiving a tube, said elements being mounted on said frame, the axes of rotation of said elements being angularly disposed relative to the path of said propelled tube, means rotatably mounting said frame relative to the path of said tube so as to vary the angular relationship of the disc-like elements relative to the path of the tube, and means to drive said elements in the same direction, so as to propel and turn a tube carried thereby.

4. In a conveying device adapted to propel and turn tubes or the like, between closely spaced treating stations, the combination comprising frames between each of the treating stations, each frame having a pair of disc-like rotatable elements mounted thereon, the axes of rotation of said disc-like elements being angularly disposed relative to the path of a propelled tube and the edge of the disc-like elements being in overlapping relationship, said elements being adjustably mounted on the frame, and means rotating said disc-like elements in the same direction, whereby a tube or the like resting on peripheral edges of said elements will be propelled and turned as the discs are rotated.

5. In a device adapted to propel and turn tubes or the like, the combination comprising a pair of disc-like rotatable elements having edges contactable by a tube to be propelled thereby, the axes of rotation of said disc-like elements being angularly disposed relative to the path of said propelled tube, means driving said disc-like elements in the same direction, and a cover member for said disc-like elements and driving mechanism and lying above the rotation axes of said disc-like elements, the top portions of said disc-like elements for engaging said tube protruding above said cover.

6. In a device adapted to propel and turn tubes or the like, the combination comprising a pair of staggered disc-like rotatable elements having surfaces for receiving a tube to be moved in a notch-like indentation therebetween, the axes of rotation of said elements being angularly disposed relative to the path of said tube, means driving said disc-like elements in the same direction, and a cover means having slots through which said disc-like elements protrude, said protruding portions including the surfaces to be engaged by a tube, said cover being above the axis of rotation of said disc-like elements serving to protect the driving mechanism and a large portion of disc-like rotatable elements.

7. In a device adapted to propel and turn tubes or the like, the combination comprising a plurality of propelling and turning arrangements, each having a frame, a pair of disc-like rotatable elements mounted on said frames, said elements having staggered edges and axes of rotation angularly disposed relative to the path of a tube to be moved by said elements, angularly adjust-

able supports for said rotatable elements mounted on said frame, a drive means, means connecting said drive means with said disc-like elements, and shaft means extending between said turning and propelling arrangements connected with each of drive means through universal joints.

8. In a device adapted to propel and turn tubes or the like, the combination comprising a pair of disc-like rotatable elements mounted in staggered relationship and having rounded peripheral surfaces contactable with a tube to be moved, the plane of each of said elements being angularly disposed relative to the path of a tube propelled thereby, angularly adjustable mounting means for said rotatable elements carried by said frame for adjusting the angle between the axes of rotation of said elements and the path of the tube, and means driving the disc-like element to which a tube is fed in a direction such that the edge of the disc-like element which is in overlapping relationship with an edge of the other disc-like element moves upwardly, rounded on the side facing a tube being fed thereto so that said tube will be guided into engagement with both of said disc-like elements.

9. In a device adapted to propel and turn tubes or the like, the combination comprising a frame,

a pair of disc-like rotatable elements having surfaces for receiving a tube in a notch-like indentation therebetween, the axes of rotation of said elements being angularly disposed relative to the path of said tube, means adjusting the angle of said axes relative to said frame, means adjusting the distance between the centers of said rotatable elements, and means driving said disc-like elements in the same direction, so as to propel and turn a tube carried thereby.

REYMOND M. REICHL.

References Cited in the file of this patent

UNITED STATES PATENTS

Number	Name	Date
389,585	Mannesmann	Sept. 18, 1888
571,226	Hadfield	Nov. 10, 1896
576,822	Pilkington	Feb. 9, 1897
759,557	Scholtz	May 10, 1904
2,038,204	Bidle	Apr. 21, 1936
2,166,608	Postlewaite	July 18, 1939

FOREIGN PATENTS

Number	Country	Date
312,010	Great Britain	May 23, 1929