Sept. 2, 1969 H. J. HOEGERMAN 3,464,063

MEDICAL EXAMINATION GOWN

Filed March 10, 1967 3 Sheets-Sheet 1

Fig. 1

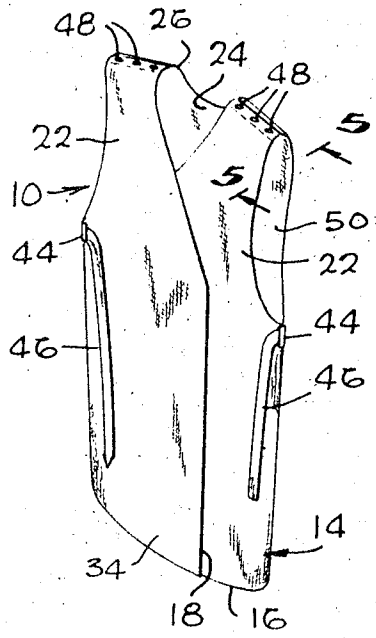

Fig. 3

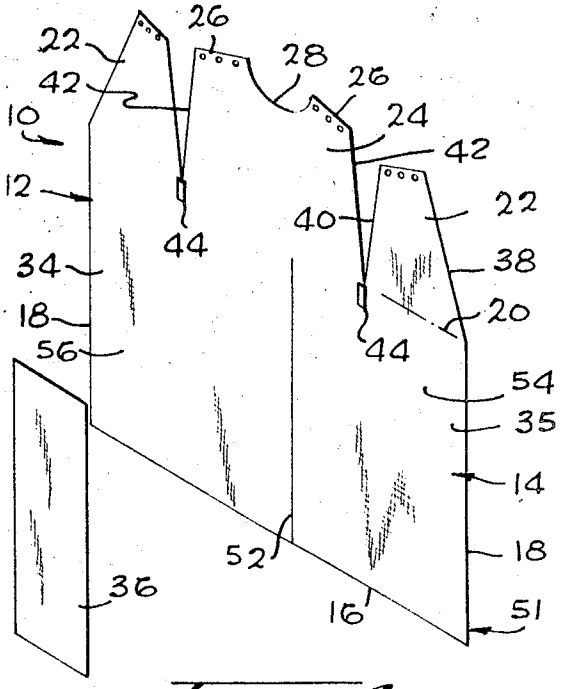

Fig. 2

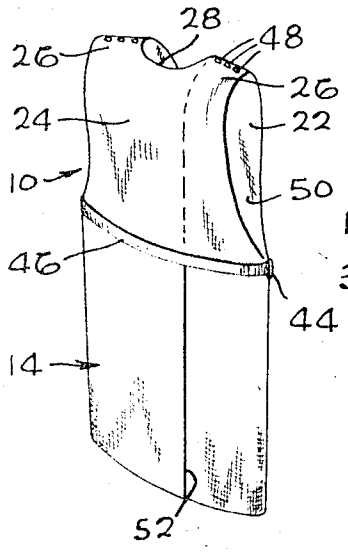

Fig. 4

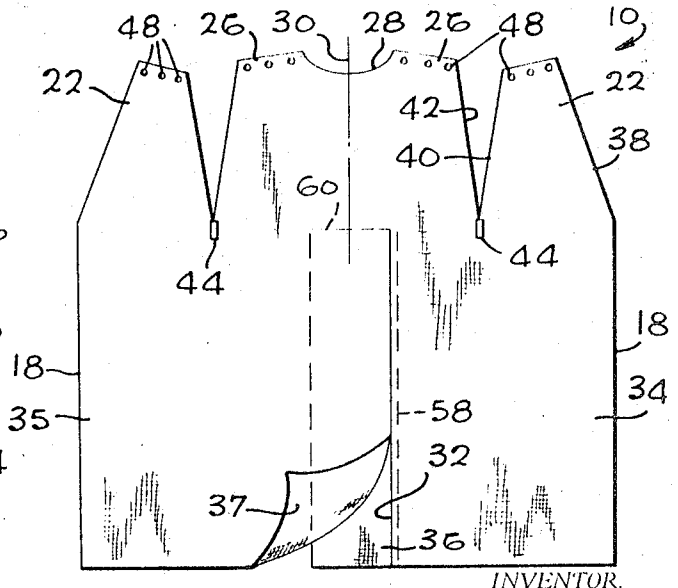

INVENTOR.
HENRY J. HOEGERMAN

BY R. E. Geauque
ATTORNEY

Sept. 2, 1969 H. J. HOEGERMAN 3,464,063

MEDICAL EXAMINATION GOWN

Filed March 10, 1967 3 Sheets-Sheet 3

Fig. 6

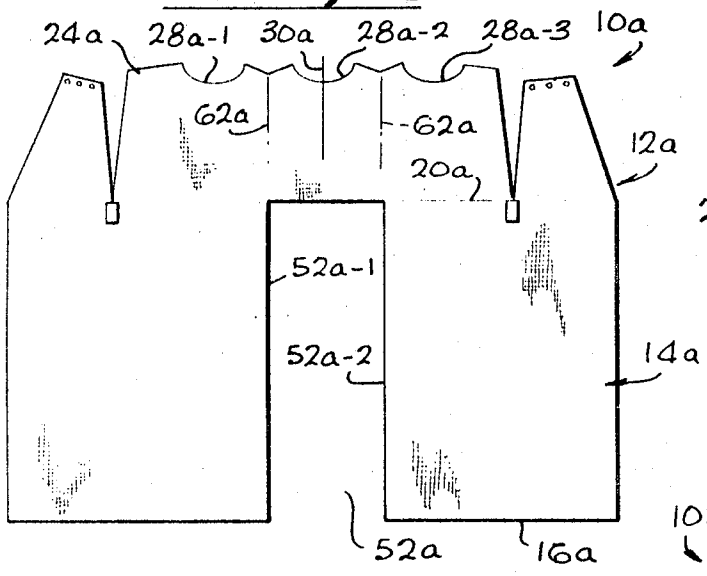

Fig. 5

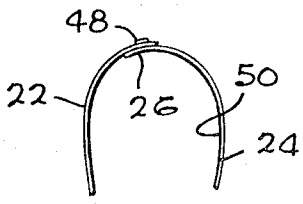

Fig. 9

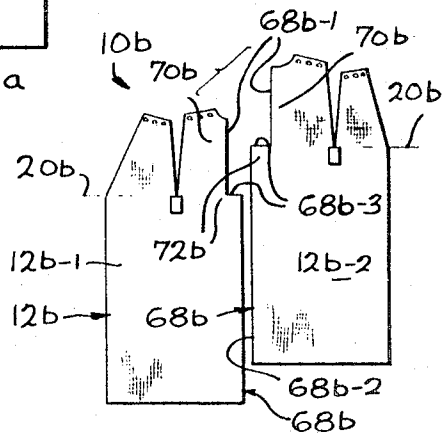

Fig. 7

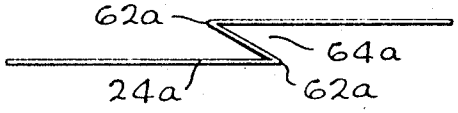

Fig. 8

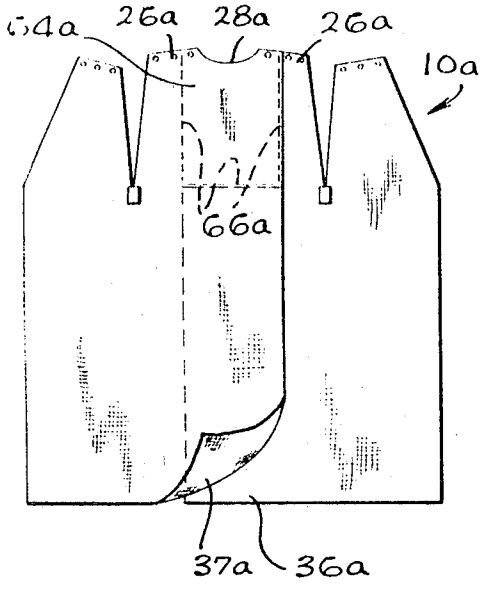

Fig. 10

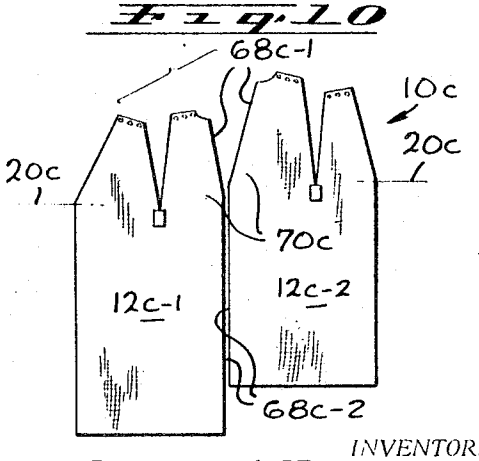

INVENTOR.
HENRY J. HOEGERMAN

BY

R. E. Granger

ATTORNEY

Sept. 2, 1969 H. J. HOEGERMAN 3,464,063

MEDICAL EXAMINATION GOWN

Filed March 10, 1967 3 Sheets-Sheet 3

Fig. 12

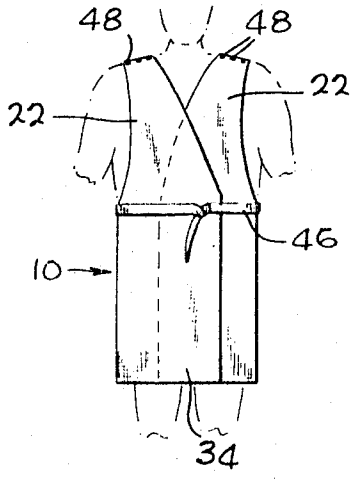

Fig. 13

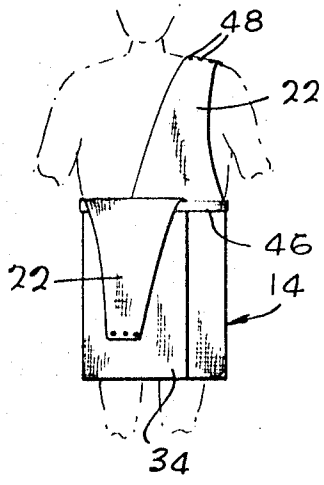

Fig. 14

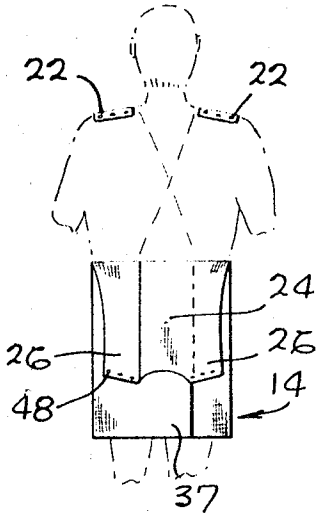

Fig. 11

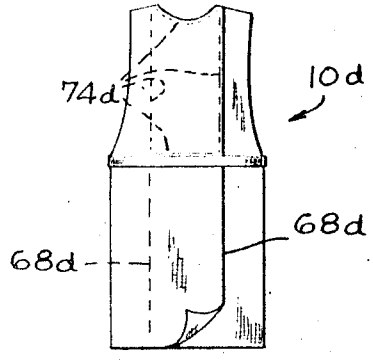

HENRY J. HOEGERMAN
INVENTOR.

BY R. E. Beaugue
ATTORNEY

United States Patent Office 3,464,063 Patented Sept. 2, 1969

3,464,063

MEDICAL EXAMINATION GOWN

Henry J. Hoegerman, 44 El Arco Drive, Santa Barbara, Calif. 93105

Filed Mar. 10, 1967, Ser. No. 622,221
Int. Cl. A41b 9/16; A61b 9/06
U.S. Cl. 2—114 8 Claims

ABSTRACT OF THE DISCLOSURE

A medical examination gown to be worn in wraparound relation to the patient's body and having overlapping front and rear skirt folds or flaps which may be individually folded aside to permit selective partial or total exposure of the lower anterior and posterior regions of the body, and upper front and back flaps releasably joined by shoulder fasteners which may be released to permit selective partial or total exposure of the upper anterior and posterior regions of the body.

This invention relates generally to medical apparel and, more particularly, to an improved medical examination gown.

Many types of medical examinations require a patient to wear a medical examination gown which, generally speaking, is a relatively loose-fitting garment designed for convenience of access to and/or selective exposure of various regions of the body. The present invention provides an improved wraparound medical examination gown which is superior in several respects to the existing examination gowns. Thus, the present gown is superior from the medical standpoint in that it permits greater freedom of access to and selective exposure of any and all parts of the body and thereby permits more complete examination of a patient in minimum time. In addition, the gown is superior from the standpoint of the patient's comfort and peace of mind in that the gown provides the patient with secure draping of the entire body except for that body region which is exposed for examination. Another advantage of the gown resides in its pleasing and relatively stylish appearance which is achieved without impairment of the gown's functional utility. The present examination gown is also uniquely constructed for ease and economy of manufacture from any suitable sheet material. For example, the gown may be constructed of paper material to render the gown disposable after use.

It is a general object of the invention, then, to provide an improved wraparound medical examination gown.

Another object of the invention is to provide a medical examination gown which is characterized by its unique functional construction which permits maximum freedom of access to and selective exposure of any and all parts of the patient's body while providing the patient with secure draping of the entire body except that region which is exposed for examination, and which is further characterized by its pleasing and stylish appearance, by its wearing comfort, by its simplicity and economy of manufacture, and by its adaptability to construction from various materials, including paper, whereby the gown may be rendered disposable after use.

Other objects, advantages and features of the invention will become apparent as the description proceeds, taken in conjunction with the accompanying drawings, in which:

FIGURE 1 is a perspective view of a medical examination gown according to the invention;

FIGURE 2 is a rear perspective view of the examination gown;

FIGURE 3 is a flat development, in perspective, of the examination gown prior to assembly;

FIGURE 4 is a flat development, in elevation, of the completed examination gown;

FIGURE 5 is an enlarged section taken on line 5—5 in FIGURE 1;

FIGURE 6 is a flat development, in elevation, of a modified examination gown according to the invention, illustrating the gown in an initial stage of its fabrication;

FIGURE 7 is a section illustrating a pleat which is formed in the body of the modified examination gown during a subsequent stage in its fabrication;

FIGURE 8 is a flat development of the completed modified examination gown;

FIGURE 9 is a flat development of a further modified examination gown according to the invention prior to assembly of the gown;

FIGURE 10 is a view similar to FIGURE 9 illustrating a further modified examination gown according to the invention;

FIGURE 11 is a rear elevation of a further modified examination gown according to the invention;

FIGURE 12 is a front elevation of an examination gown being worn by a patient;

FIGURE 13 is a view similar to FIGURE 12 with one front flap of the gown folded downwardly to expose one-half of the patient's chest region; and

FIGURE 14 is a rear view of the examination gown illustrating the back flap of the gown folded downwardly to expose the patient's upper back region.

The medical examination gown **10** of the invention which has been selected for illustration in FIGURES 1–5 of the drawings comprises a body **12** fashioned from pliable sheet material, such as cloth or paper. The body of the illustrated gown includes a normally lower, generally rectangular skirt portion **14** bounded by a lower edge **16**, side edges **18**, and an upper margin **20**. Joined to the skirt portion **14**, along its upper margin **20**, are a pair of front chest flaps **22** located adjacent the side edges **18**, respectively, and an intervening back flap **24**. The back flap **24** has an upper scalloped or generally yoke-shaped edge defining a pair of spaced shoulder portions **26** and an intervening neck scallop **28**. The body **12** of the gown is generally symmetrical about a centerline **30**. Adjacent the centerline **30** is a cleavage **32** in the skirt portion **14** which extends from the lower edge **16** to a position adjacent the upper margin **20** of the skirt portion. Cleavage **32** divides the skirt portion into two halves or panels having outer marginal portions **34** and **35** adjacent the skirt side edges **18** and inner marginal portions **36**, **37** which overlap one another along the centerline **30** to define the cleavage **32**. These outer and inner marginal portions form and are hereinafter referred to as front and rear skirt flaps, respectively.

The front chest flaps **22** are bounded by outer and inner edges **38** and **40** which converge toward the upper extremities of the flaps to provide the latter with a tapered shape, to fit the patient's neck and shoulders. The side edges **18** of the skirt portion **14** and the outer edges **38** of the front flaps **22** meet at the upper margin **20** of the skirt portion. The back flap **24** is bounded by side edges **42** which converge toward the upper extremity of the back flap to provide the latter with a tapered shape and which converge with and meet the confronting inner edges **40** of the flaps **22** adjacent the upper skirt margin **20**. Secured to the gown body **14**, just below the lower meeting ends of the flap edges **40**, **42**, are loops **44** for receiving a waist sash **46**.

As shown in FIGURE 4, the present examination gown **10** is essentially a sheet which may be laid out flat. When the gown is worn by a patient, the gown is wrapped around the patient's body in the manner illustrated in FIGURE 12. The skirt portion **14** then encircles the body.

below the waist and the front skirt flaps **34** and **35** overlap one another in front of the body to cover the lower anterior body regions below the waist. The front flaps **22** overlap one another at their lower extremities and extend up to the crests of the patient's shoulders to cover his anterior chest and shoulder regions. The back flap **24** covers the patient's back above the waist, and the shoulder portions **26** of this flap extend up to the crests of the patient's shoulders into overlapping relation with the upper shoulder ends of the front flaps **22**. The overlapping ends of the front flaps and the back flap shoulder portions are releasably joined by shoulder fasteners **48**. The front flaps and back flap when thus joined define large arm holes **50** for receiving the patient's arms. The posterior skirt flaps **36** and **37** are disposed in overlapping relation at the rear of the body to cover the lower posterior body regions. The ends of the waist sash **46** are tied or otherwise joined in front of the body to secure the gown in wrap-around relation to the body.

It is evident at this point that the examination gown described above possesses the several advantages mentioned earlier. Thus, the gown is beneficial from the medical examination standpoint in that it permits maximum freedom of access to and selective exposure of any and all parts of the patient's body. For example, the upper back can be examined by the feeling or palpitating hand of the physician, or with the aid of a stethoscope, by slipping the hand or stethoscope underneath the gown and across the back through the large arm holes **50** which extend from the shoulder to the waist. A more thorough examination of the upper back may be effected by releasing the shoulder fastener **48**. Thus, the shoulder fasteners on either shoulder can be released to permit one half of the back flap **24** to be folded aside, thereby to expose a portion only of the upper back. Alternatively, both sets of shoulder fasteners can be released simultaneously to permit the entire back flap **24** to be folded downwardly and thereby expose the entire upper back of the patient, as shown in FIGURE 14.

The lower back, buttocks, rectal area, and posterior thighs are exposed by separating the overlapping back folds or flaps **36**, **37** of the skirt portion **14**. These back flaps can be parted completely, from the waist down, or only over a limited area, as desired. In this way, exposure of the lower posterior regions of the patient may be partial or complete, midline or paramidline, and no matter what part of the posterior region of the body is thus exposed, the remainder of the body remains fully draped.

Access to the patient's anterior chest and breast regions may be achieved in various ways. For example, the physician's palpitating hand or stethoscope may be inserted through the large arm holes **50**, in the same manner as described earlier in connection with examination of the patient's upper back region. Alternatively, the arm holes may be stretched toward the midline, thus exposing the patient's breasts and pectoral region. The lower overlapping extremities or lapel regions of the front flaps **22** may also be separated to expose the underlying chest region of the patient on either or both sides. Finally, one or both sets of the shoulder fasteners **48** may be released to permit one (FIGURE 13) or both of the front flaps **22** to be folded down, thus exposing the right, the left, or both sides of the patient's chest region. This latter method of examination is preferred for the reason that it affords maximum exposure of and allows full visualization of the patient's chest region to the waist.

The upper and lower abdominal regions of the patient are exposed by separating the overlapping front folds or flaps **34**, **35** of the skirt portion **14**. In this case, partial or complete exposure of these abdominal regions may be accomplished by partial or complete separation of the front skirt flaps, in much the same way as described earlier in connection with examination of the patient's lower posterior region. Complete exposure of the patient's epigrastic or upper abdominal area may require untying of the waist sash **46**.

The patient's genital area is exposed by placing the patient in the lithotomy position in such a way that the front skirt folds or flaps **34**, **35** simply drape over the patient's thighs, leaving the genital region exposed, while the patient enjoys the security of being otherwise fully draped. The necessity of placing sheets under and/or over the patient while on the examination table is thus eliminated.

The present examination gown possesses several other advantages in addition to those discussed above. Thus, the sash **46** secures the front skirt folds or flaps **34**, **35** in their overlapping relation and thereby prevents inadvertent exposure of the patient's body. Moreover, the sash provides the examination gown with a stylish form fitting appearance which creates a feeling of security and pleasure in the patient, thereby reducing the patient's anxiety which normally accompanies examination, and induces the patient's cooperation. Another advantage of the sash **46** is that it prevents the gown from falling to the floor when the shoulder fasteners **48** are released. In this way, the sash limits exposure of the patient to the upper half of the body when the shoulder fasteners are released. Because of the unique configuration of the present examination gown, it may be put on and removed in much the same manner as a coat, thus avoiding mussing of the patient's hair which normally occurs when donning an examination gown which must be placed over the head.

Further advantages of the present examination gown resides in its simplicity of construction and ease and economy of manufacture. In this regard, for example, it is evident that the body of the gown may be simply and economically produced on a mass production basis by stamping, cutting, or otherwise severing the body of the gown from any suitable sheet material, such as cloth or paper. Construction of the gown from paper is desirable, of course, for the reason that the gown is thereby rendered disposable after use.

It is evident at this point that the present examination gown may be constructed in various ways and from any number of pieces which may be stitched, stapled, adhesively bonded, or otherwise joined to one another. In this regard, the drawings illustrate various alternative ways of constructing the gown. In FIGURES 1–5, for example, the body **12** of the examination gown has a two-piece construction and includes a main body sheet **51** which is stamped or cut to the shape illustrated in FIGURE 3 and a separate rectangular flap member which forms the rear skirt flap **36**. The skirt portion **14** of the body sheet **51** has a slit **52** parallel to and offset to one side of the center line **30** of the body and extending from the lower skirt edge **16** to a position adjacent the upper skirt margin **20**. This slit divides the skirt portion into a relatively narrow panel **54** and a relatively wide panel **56**. One side edge of the flap member **36** is joined to the inner surface of the narrow skirt panel **54** along the slit **52** and the upper edge of the flap member is joined to the inner surface of the wide skirt panel **56** along the upper skirt margin **20** to form connecting seams **58** and **60** between the flap member and the body sheet **51**. The flap member and the inner marginal portion of the wide skirt panel **56** adjacent the slit **52** form the rear overlapping skirt folds or flaps **36**, **37**.

FIGURES 6–8 illustrate an examination gown **10***a* according to the invention having a one-piece body **12***a* which is symmetrical about a center line **30***a*. The lower skirt portion **14***a* of the body has a rectangular cutout **52***a* with side edges **52***a*–**1** and **52***a*–**2** extending parallel to and disposed equal distances to opposite sides of the center line **30***a*. Cutout **52***a* extends from the bottom skirt edge **16***a* to the upper skirt margin **20***a*. In this case, the one-piece body **12***a* of the examination gown is folded on fold lines **62***a* coinciding approximately with the edges **52***a*–**1** and **52***a*–**2** of the cutout **52***a* to form a pleat **64***a*

in the back panel **24***a* of the gown and bring the marginal skirt portions adjacent the cutout into overlapping relation to form rear skirt flaps **36***a*, **37***a*. The pleat folds are then joined along connecting seam lines **66***a* to form an examination gown essentially identical in shape to the examination gown described earlier. It will be observed that prior to folding of the body sheets **12***a* to form the pleat **64***a*, the back flap **24***a* of the examination gown **10***a* is substantially wider than the back flap **24** of the earlier examination gown. The back flap **24***a* has three neck scallops **28***a*–**1**, **28***a*–**2**, **28***a*–**3** formed, respectively, in the two upper edge portions of the flap located outwardly of the fold lines **62***a* and the intervening edge portion located between the fold lines. These scallops are arranged in such a way that they overlie one another in the completed examination gown **10***a* to form the shoulder portions **26***a* and intervening neck scallop **28***a* of the gown. The examination gown **10***a* is otherwise identical to and is worn in the same way as the earlier examination gown of the invention.

FIGURES 9 and 10 illustrate two modified examination gowns **10***b* and **10***c* according to the invention having alternative one-piece body constructions. In each case, the body of the examination gown comprises two separate panels of similar but inverted shape which are joined to one another to form the body of the completed gown. In FIGURE 9, the two separate body panels **12***b*–**1** and **12***b*–**2** of the examination gown have adjacent stepped boundary edges **68***b* including upper edge portions **68***b*–**1**, lower edge portions **68***b*–**2** and intervening edge portions **68***b*–**3**. The upper edge portions **68***b*–**1** coincide approximately with the center line of symmetry of the completed examination gown. The lower edge portion **68***b*–**2** parallel and are spaced in the direction of the opposite body panel from this center line. The invervening edge portions **68***b*–**3** coincide approximately with the upper skirt margin **20***b* and extend normal to the center line, between the adjacent extremities of the upper and lower boundary edge portions **68***b*–**1**, **68***b*–**2** of the respective body panel. The upper marginal portions **70***b* and **72***b* of the body panels **12***b*–**1** and **12***b*–**2** adjacent the upper and intermediate boundary edge portions **68***b*–**1** and **68***b*–**3** form marginal seam portions which are placed in overlapping relation and joined to form connecting seams between the body panels. The lower adjacent inner marginal portions of the panels then overlap to form the rear overlapping skirt flaps of the completed examination gown.

The modified examination gown **10***c* of FIGURE 10 has a two-piece body construction which is similar to that of FIGURE 9 except that the upper and lower boundary edge portions **68***c*–**1** and **68***c*–**2** of the body panels **12***c*–**1** and **12***c*–**2** meet on the upper skirt margin **20***c*, and the upper boundary edge portions **68***c*–**1** extended upwardly in intersecting relation to one another and at acute angles relative to the center line of symmetry of the completed examination gown. The upper overlapping marginal portions **70***c* of the body panels **12***c*–**1** and **12***c*–**2**, which are joined to form connecting seams between the panels, are thus triangular in shape. The completed examination gowns of FIGURES 9 and 10 are substantially identical in shape to and are worn in the same way as the earlier examination gowns of the invention.

It should be understood, of course, that the above-described examination gown construction according to the invention are not intended to be exhaustive. In this regard, for example, it is evident that the overlapping boundary edges of the two body panels of the two-piece examination gown construction like those illustrated in FIGURES 9 and 10 may be straight from the lower skirt edge to the upper edge of the back panel as shown at **68***d* in the examination gown **10***d* of FIGURE 11. In this case, the overlapping marginal edge portions of the body panels, above the upper skirt margin, may be joined by a closed rectangular stitch line **74***d*, or in any other convenient way, to form a connecting seam between the body panels. An examination gown according to the invention may also possess a variety of other multiple piece body constructions, although those heretofore described are the preferred constructions. It is evident, of course, that all of these alternative examination gown constructions, including those illustrated in the drawings, possess the several advantages discussed earlier in connection with the examination gown of FIGURES 1–5.

While the instant invention has been shown and described herein what is conceived to be the most practical and preferred embodiments, it is recognized that departures may be made therefrom in the scope of the invention, which is therefore not to be limited to the details disclosed herein.

What is claimed is:

1. A wraparound medical examination gown for a patient comprising in planar condition:

a body fashioned from pliable sheet material and including a normally lower generally rectangular skirt portion bounded by a lower edge, side edges and an upper margin substantially parallel to said bottom edge and located approximately at waist level;

a pair of front chest flaps joined to said skirt portion approximately along said upper margin adjacent said side edges, respectively, and a back joined to said skirt portion along said upper margin between said front flaps;

said back having upper edge portions defining a pair of spaced shoulder portions;

said skirt portion including outer marginal portions adjacent said side edges, respectively, defining front skirt flaps having free edges;

said gown being adapted to be worn in wraparound relation to the patient's body in such a way that said skirt portion encircles the lower portion of the patient's body with said front skirt flaps overlapping one another at the front of the patient's body to form the gown closure, said back extends upwardly from said skirt portion at the rear of the patient's body to cover the patient's upper back with said shoulder portions of said back extending upwardly towards the crests of the patient's shoulders from the rear, and said front chest flaps extend upwardly from said skirt portion at the front of the patient's body towards the crests of the patient's shoulders and into connecting relation with said shoulder portions of said back to cover the patient's bust regions;

releasable fastening means joining the connecting ends of said front chest flaps and said back shoulder portions;

each of said front chest flaps being spaced from said back to define with its joined shoulder portion an enlarged patient arm opening extending substantially to the upper skirt margin thereby permitting the patient's body to be examined through said arm opening;

said skirt portion having inner marginal portions completely overlapping one another and extending upwardly from said lower edge centrally of said side edges, said marginal portions forming rear skirt flaps having free vertical edges, and means at the upper portion of said marginal portions permanently securing said rear flaps in overlapping condition, said skirt portion being otherwise free of any opening between said side edges and said inner marginal portions; and

a waist sash attached to and adapted to wrap around said gown body at approximately the waist level of said gown for releasably securing said front flaps of said gown in wraparound relation to the patient's body while at the same time permitting either or both of said flaps and shoulder portions to be selectively folded aside to permit selective exposure of the patient's body regions covered thereby;

each of said front skirt flaps being of such width as to overlap and substantially cover the other in said wraparound relation and being maintained in said overlap condition only by said waist sash when said gown is worn.

2. A medical examination gown according to claim 1 wherein each of said front chest flaps has marginal side edges which extend upwardly in converging relation from said upper skirt margin to the upper end of the respective flap to define said arm openings and whereby when said gown is worn said front chest flaps overlap near the patient's waist and then diverge in the upward direction to provide said gown with a deep V-neck in front.

3. A wraparound medical examination gown as defined in claim 1 wherein in said rear skirt flaps are defined in part by a slit dividing said skirt portion into a relatively wide panel and relatively narrow panel;

the inner marginal portion of said wide skirt panel contiguous said slit defining one of said rear skirt flaps; and

the inner marginal portion of said narrow skirt panel being formed by a separate rectangular flap member joined to said narrow panel along said slit, said flap member being secured to said wide skirt panel by said permanent securing means along said upper skirt margin to define the other of said rear skirt flaps disposed in overlapping relation to said one rear skirt flap.

4. A gown as defined in claim 1 wherein said body is generally symmetrical about a centerline normal to said bottom edge and upper margin;

said skirt portion having a generally rectangular cutout opening through said bottom edge and bounded by said boundary edges generally parallel to and located approximately equal distances to opposite sides of said center line;

said cutout dividing said skirt portion into two similar panels having said inner marginal portions contiguous said cutout boundary edges and defining said rear skirt flaps;

said body being folded on lines coinciding approximately with said cutout boundary edges to form a pleat in said back and bring said inner marginal portions into overlapping relation to form said rear skirt flaps; and

said permanent securing means joining the folds of said pleat.

5. An examination gown as defined in claim 4 wherein:

said back has an upper intermediate edge portion between said fold lines and upper outer edge portions at opposite sides of said intermediate edge portion;

said edge portions having scallops which overlie one another within said pleat to form an upper edge of said back.

6. An examination gown as defined in claim 1 wherein:

said gown body comprises two separate panels of similar shape having lower inner marginal portions and upper inner marginal seam portions disposed in overlapping relation along the vertical center line of said gown body;

said lower inner marginal portions define said rear skirt flaps; and

said permanent securing means joining said overlapping upper inner marginal seam portions to form said back of said gown by a connecting seam between said panels.

7. An examination gown as defined in claim 1 wherein:

said body is generally symmetrical about a centerline normal to said bottom edge and upper margin;

said gown body comprising two separate panels of similar shape having adjacent stepped boundary edges each including an upper edge portion generally parallel to and approximately coinciding with said centerline, a lower edge portion generally parallel to said centerline and offset in the direction of the opposite panel from said centerline, and an intervening edge portion extending normal to said centerline between the adjacent extremities of said upper and lower edge portions;

each panel having an upper inner marginal seam portion and a lower inner marginal portion contiguous said upper and lower boundary edge portions respectively, of the respective panel;

said panels being disposed with said upper marginal portions and said lower marginal portions overlapping one another, with said overlapping lower marginal portions forming said rear skirt flaps; and

said permanent securing means joining said overlapping seam portions to form said back of said gown by a connecting seam between said panels.

8. A gown as defined in claim 1 wherein said back comprises a single back flap joined to said skirt portion and having a continuous upper edge containing said edge portions.

References Cited

UNITED STATES PATENTS

1,462,515	7/1923	McElroy	2—72
782,819	2/1905	Bikle	2—75
1,087,924	2/1914	Cowen	2—74
2,425,402	8/1947	Sieloff	2—75
2,818,573	1/1958	O'Donnell	2—114
3,160,891	12/1964	MacDonald	2—69

FOREIGN PATENTS

3,452	1891	Great Britain.

OTHER REFERENCES

Cheri Lamb, Inc.; Brochure; U.S. Patent Office mail room, Nov. 21, 1966.

RICHARD J. SCANLAN, JR., Primary Examiner