June 11, 1929. D. L. LINDQUIST ET AL 1,717,046

ELEVATOR SYSTEM

Filed May 13, 1925 8 Sheets-Sheet 1

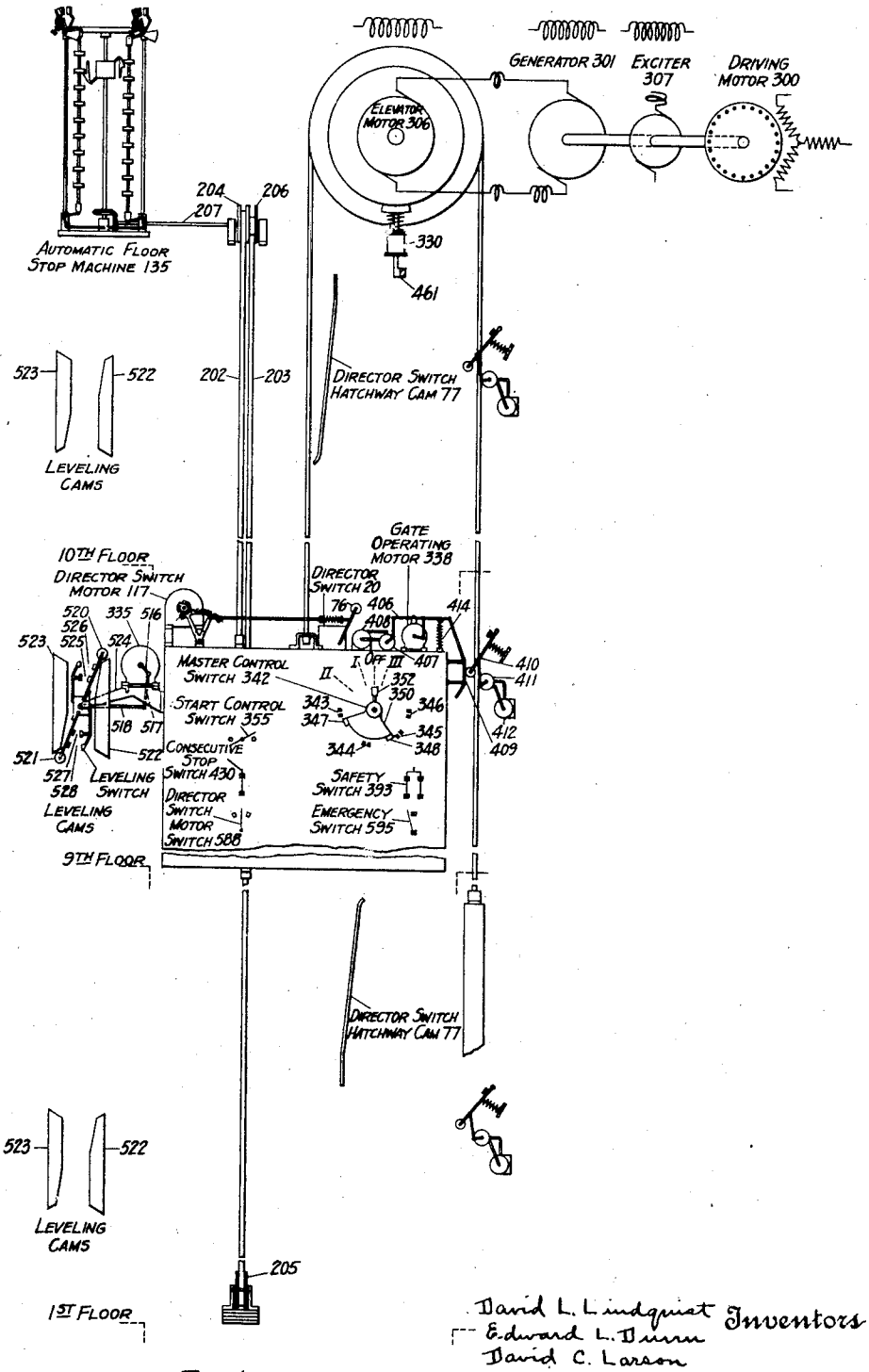

FIG. 1

David L. Lindquist Inventors
Edward L. Dunn
David C. Larson

By their Attorney Walter A. Bradley

June 11, 1929. D. L. LINDQUIST ET AL 1,717,046

ELEVATOR SYSTEM

Filed May 13, 1925 8 Sheets-Sheet 2

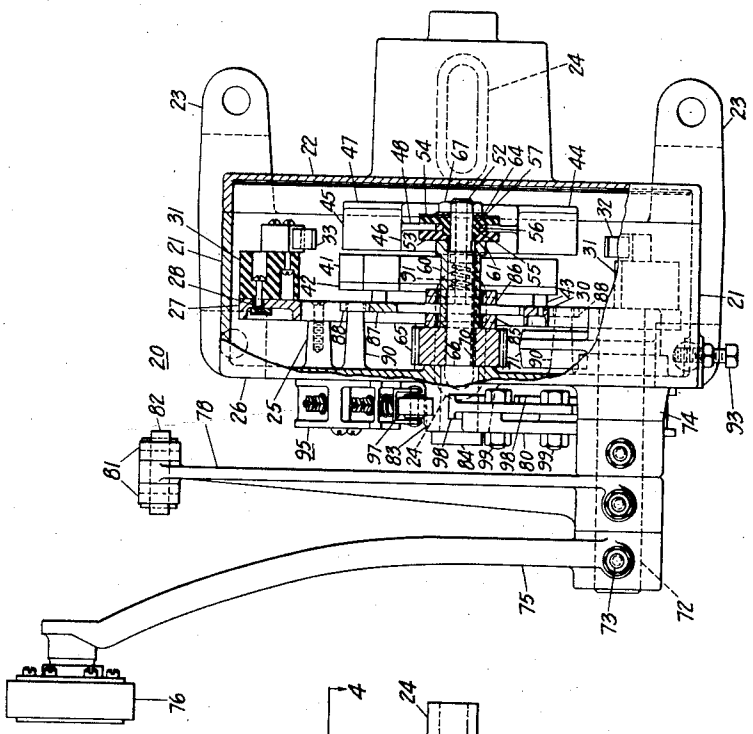

FIG. 3

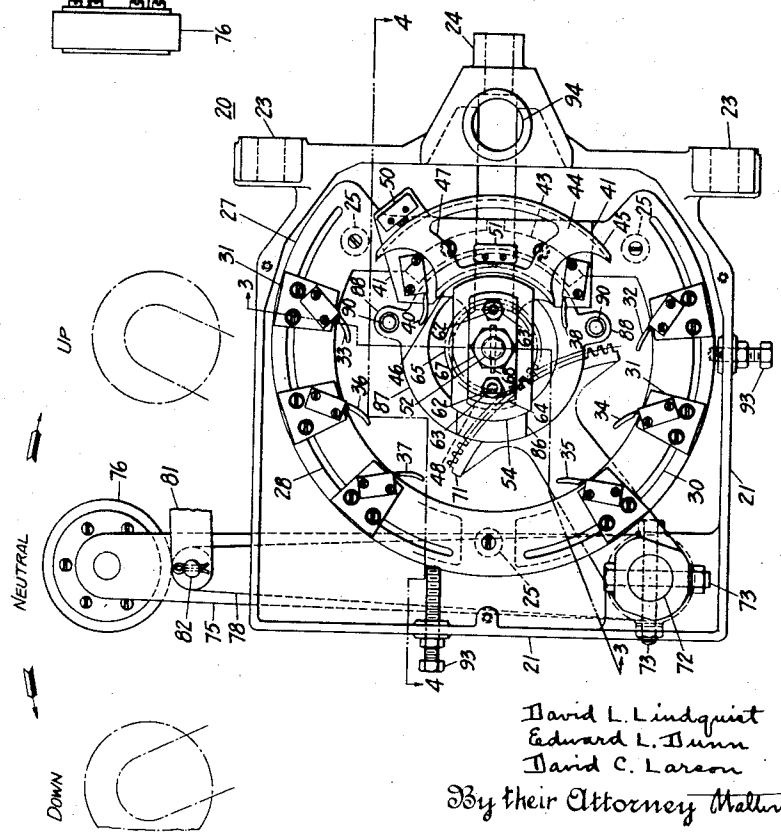

FIG. 2

David L. Lindquist
Edward L. Dunn
David C. Larson
Inventors

By their Attorney Walter E. Bradley

June 11, 1929. D. L. LINDQUIST ET AL 1,717,046

ELEVATOR SYSTEM

Filed May 13, 1925 8 Sheets-Sheet 3

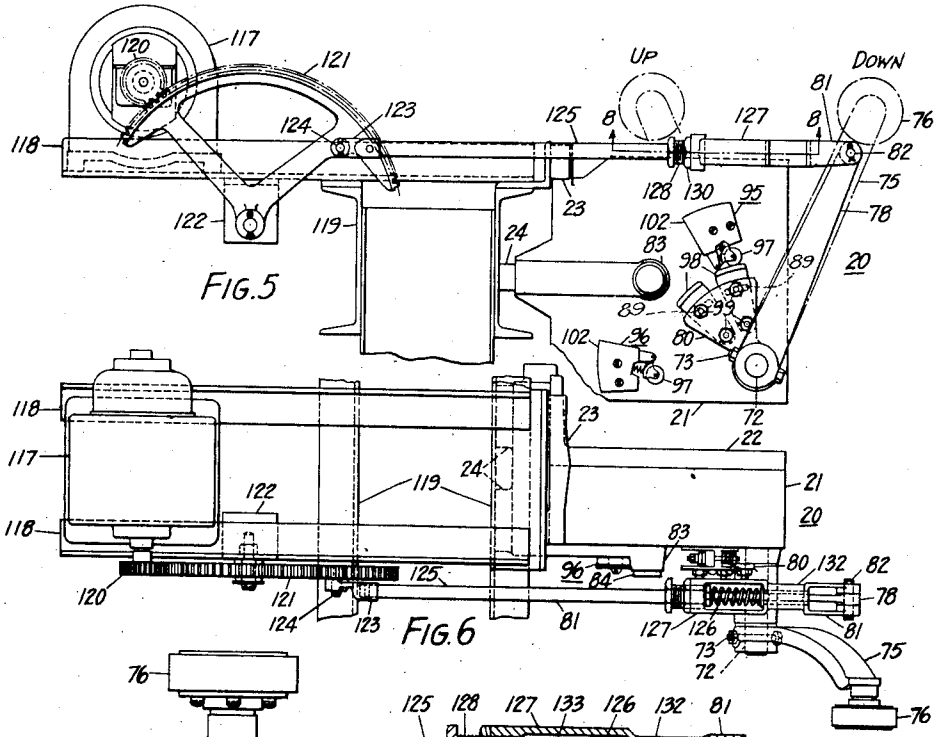

FIG. 5

FIG. 6

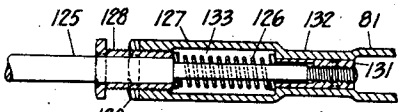

FIG. 8

FIG. 4

David L. Lindquist Inventors
Edward L. Bunn
David C. Larson
By their Attorney Walter A. Bradley

June 11, 1929. D. L. LINDQUIST ET AL 1,717,046

ELEVATOR SYSTEM

Filed May 13, 1925 8 Sheets-Sheet 4

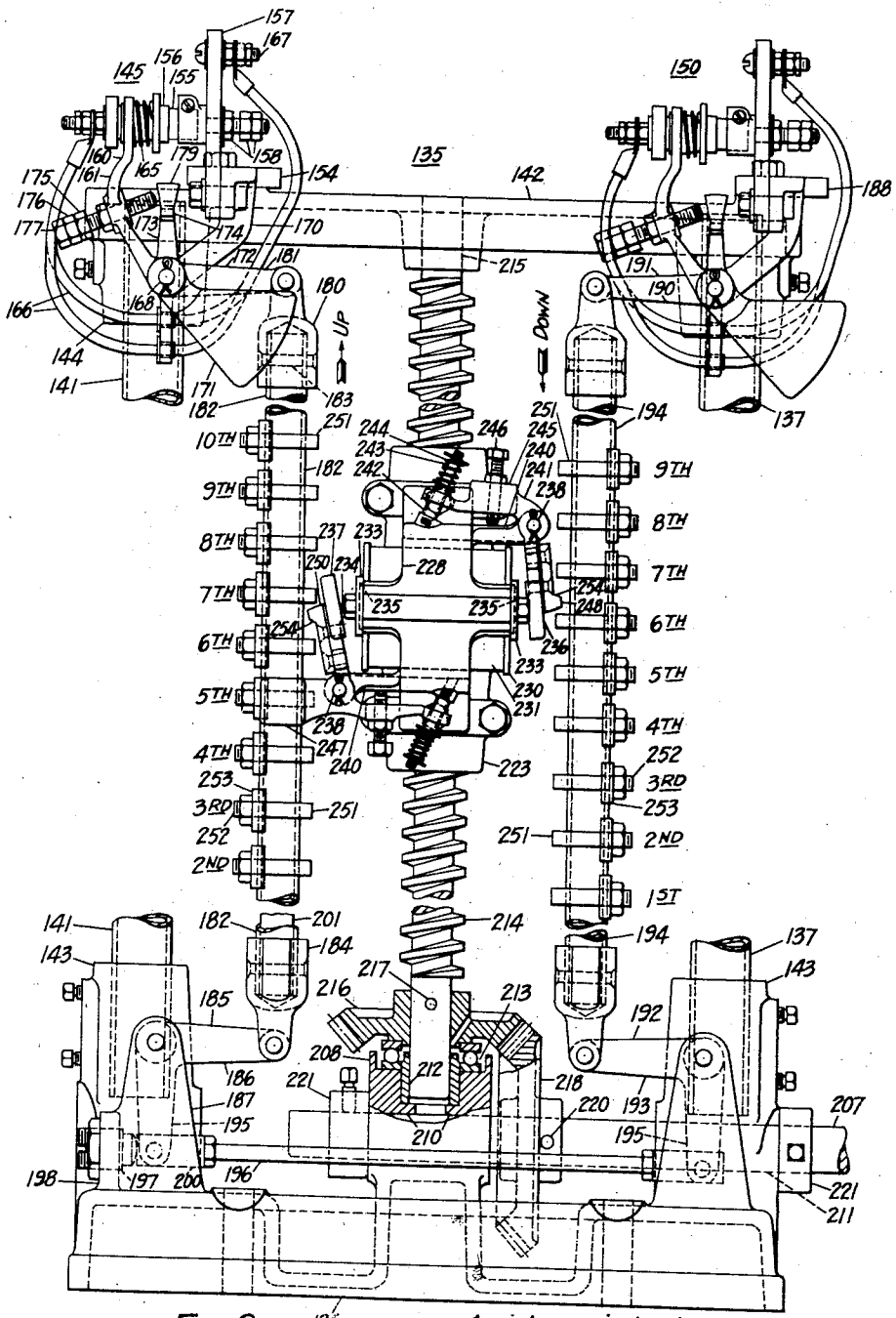

FIG. 9

David L. Lindquist
Edward L. Dunn
David C. Larson
Inventors

By their Attorney Walter E. Bradley

June 11, 1929. D. L. LINDQUIST ET AL 1,717,046

ELEVATOR SYSTEM

Filed May 13, 1925 8 Sheets-Sheet 5

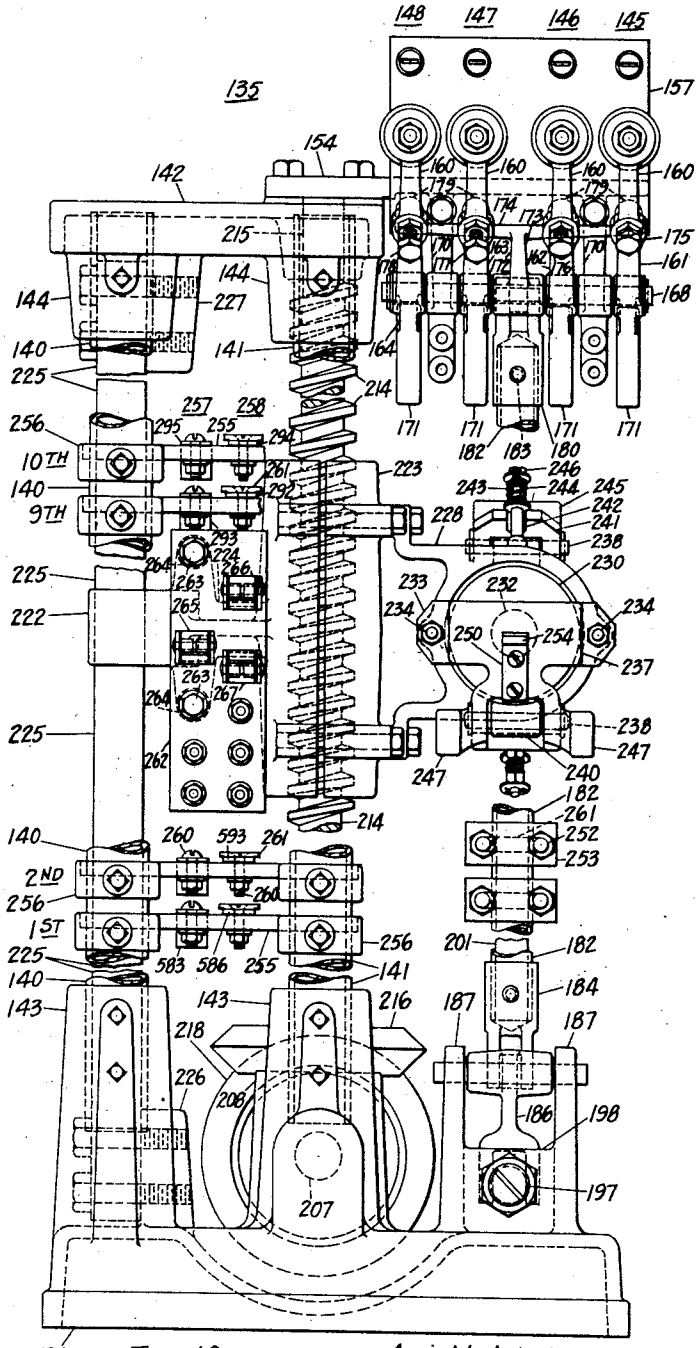

FIG. 10

David L. Lindquist
Edward L. Dunn
David C. Larson
Inventors

By their Attorney Walter E. Bradley

June 11, 1929. D. L. LINDQUIST ET AL 1,717,046

ELEVATOR SYSTEM

Filed May 13, 1925 8 Sheets-Sheet 6

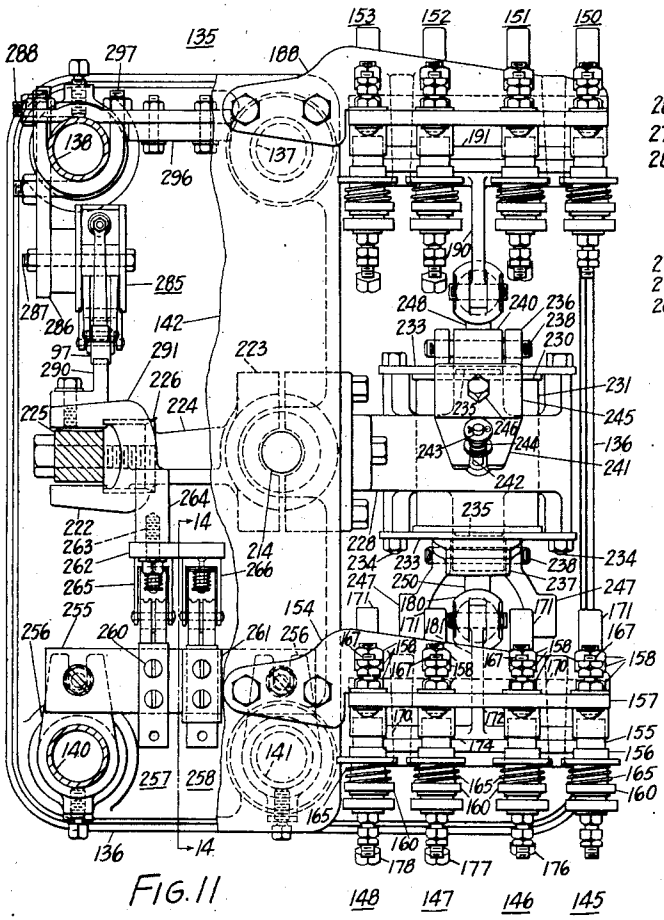

FIG. 11

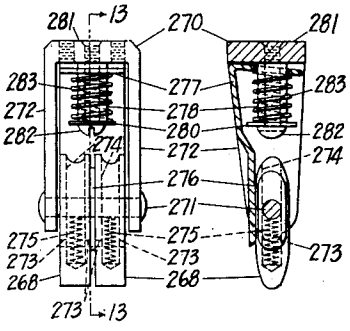

FIG. 12 FIG. 13

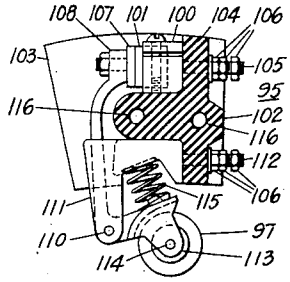

FIG. 7

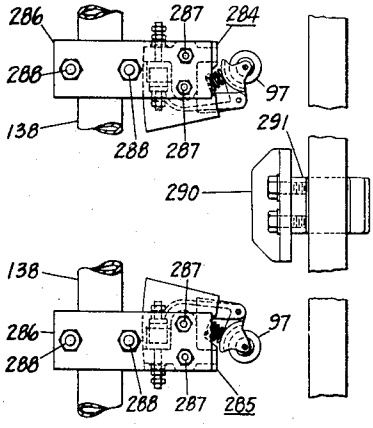

FIG. 15

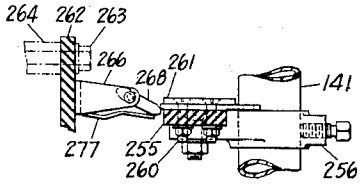

FIG. 14

David L. Lindquist
Edward L. Dunn
David C. Larson
Inventors

By their Attorney Walter E. S. Bradley

June 11, 1929. D. L. LINDQUIST ET AL 1,717,046

ELEVATOR SYSTEM

Filed May 13, 1925 8 Sheets-Sheet 7

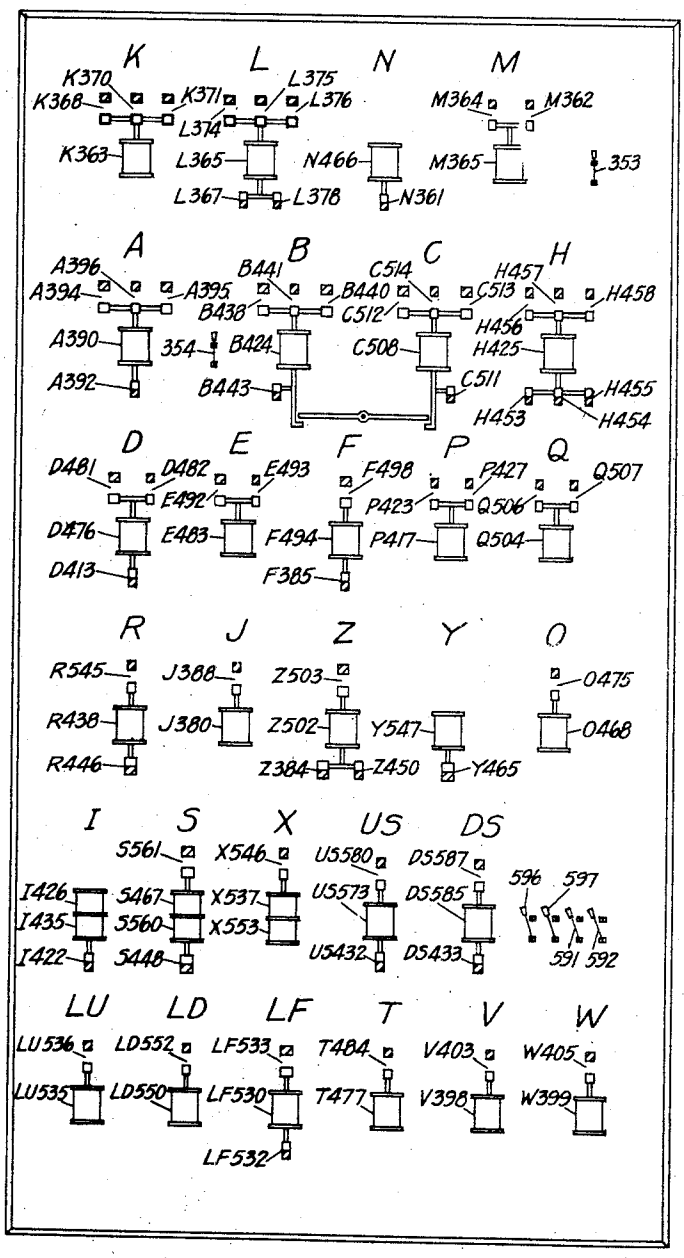

FIG. 16

David L. Lindquist
Edward L. Bullen
David C. Larson
Inventors

By their Attorney Walter S. Bradley

June 11, 1929. D. L. LINDQUIST ET AL 1,717,046

ELEVATOR SYSTEM

Filed May 13, 1925 8 Sheets-Sheet 8

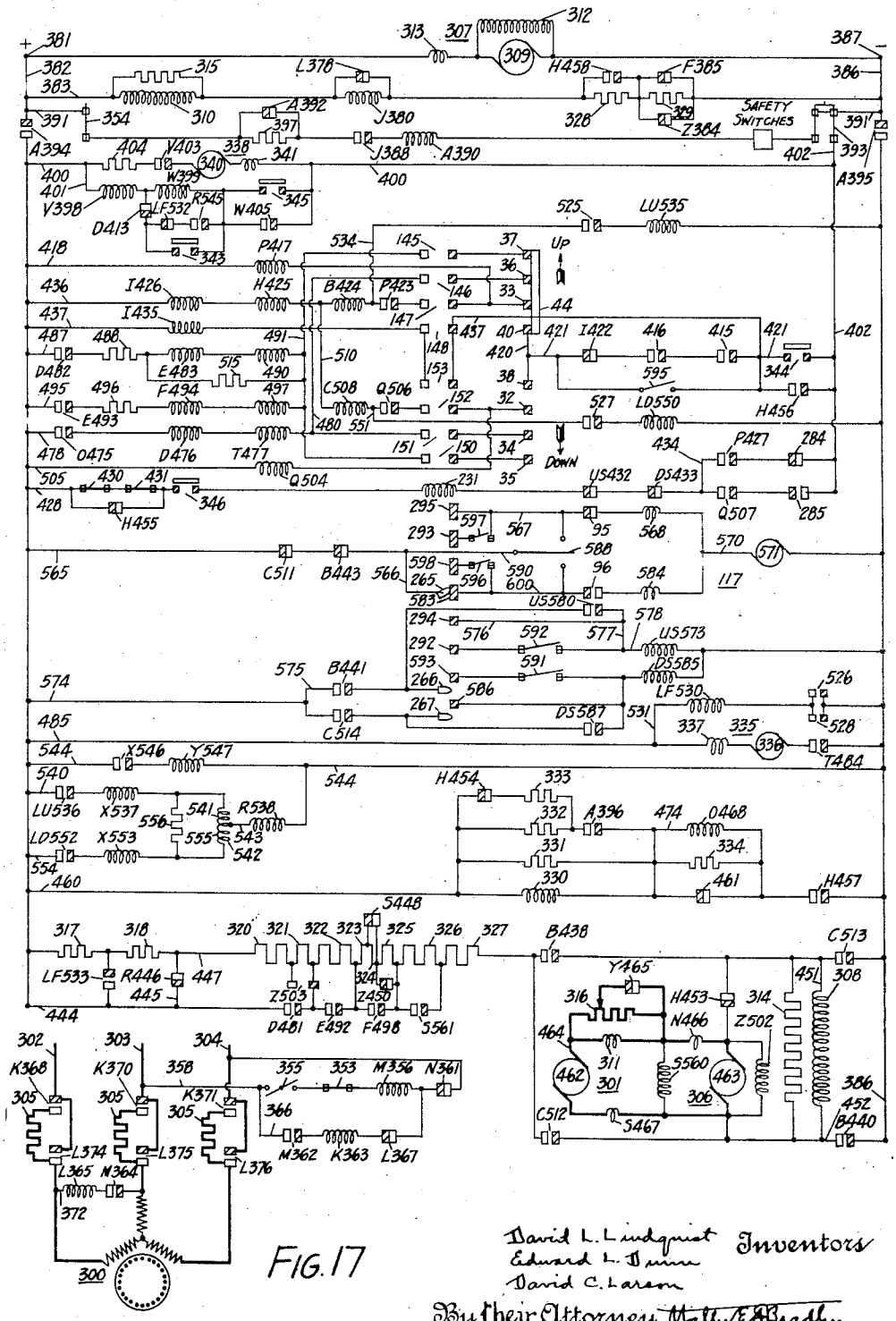

FIG. 17

David L. Lindquist Inventors
Edward L. Dunn
David C. Larson

By their Attorney Walter E. Bradley

Patented June 11, 1929. 1,717,046

UNITED STATES PATENT OFFICE.

DAVID L. LINDQUIST, OF HARTSDALE, NEW YORK, AND EDWARD L. DUNN, OF EAST ORANGE, NEW JERSEY, AND DAVID C. LARSON, OF YONKERS, NEW YORK, ASSIGNORS TO OTIS ELEVATOR COMPANY, OF JERSEY CITY, NEW JERSEY, A CORPORATION OF NEW JERSEY.

ELEVATOR SYSTEM.

Application filed May 13, 1925. Serial No. 29,999.

This invention relates to elevator systems.

As the art of electric elevator systems has developed, there has been an increasing tendency to relieve the operator in the car of various control operations. In some of the earlier systems the starting and stopping of the car, the direction of travel of the car and the rate of acceleration and retardation were all controlled by the operator. Later the systems were arranged so that the rate of acceleration and retardation was determined automatically by means controlled by the operator. Still later automatic means for bringing the car to an exact level with the landings in stopping were provided. Elevator systems have recently been developed wherein arrangements are provided for relieving the operator of determining the distance from the landing at which to return the car switch to "neutral" position to permit automatic retarding means and leveling devices to bring the car to rest at the landing. These developments greatly increased the efficiency of operation of elevator systems over systems of the earliest types.

It was with the view of further increasing efficiency of operation that the present invention was developed, the system herein disclosed being particularly suitable for elevator service such as required in department stores.

One feature of the invention is to have the direction of travel of the car determined automatically thus leaving the operator only the control of the initiation of the starting operation and the selection of the landing at which a stop is to be made.

Another feature resides in causing the car to operate between selected landings as terminals.

Other features and advantages will become apparent from the following description, taken in connection with the accompanying drawings wherein one embodiment of the invention is illustrated.

In buildings where the service is heavy, it is important that the operator give much of his time and thought to the handling of the passengers so that they get to their destination in the minimum of time and with the least confusion. Further, stops should be made only at the landings, except in the event of emergencies. In accordance with this invention, in starting the operator is required to exercise his judgment only as to the time when the starting operation should be initiated, such initiation being accomplished by the same simple motion of a hand operated switch regardless of the direction of travel of the car. The stopping operation is automatic, the operator having only to select the floor at which it is desired to stop the car, the selection being made by releasing the hand operated switch in a certain zone of considerable length. In department stores where it is frequently desirable to stop at every floor, the stopping operation may be initiated immediately upon starting without further act of the operator, thus causing the car to stop automatically at each successive floor.

In the drawings:—

Figure 1 is a simplified schematic representation of the elevator system;

Figure 2 is a front elevation of the "director switch," with the cover plate removed;

Figure 3 is a view, partly in elevation and partly in section, taken along line 3—3 of Figure 2;

Figure 4 is a view in horizontal section, with parts broken away, taken along the line 4—4 of Figure 2;

Figure 5 is a front elevation of the "director switch" reversing mechanism;

Figure 6 is a plan view of the same;

Figure 7 is a detail, partly in section, of a cam operated switch;

Figure 8 is a detail in section, taken along line 8—8 of Figure 5, of a portion of the connecting rod of the "director switch" reversing mechanism;

Figure 9 is a front elevation, with parts broken away, of the automatic floor stop machine;

Figure 10 is a side elevation of the same, also with parts broken away;

Figure 11 is a plan view of the same, also with parts broken away;

Figure 12 is a detail in plan of a brush;

Figure 13 is a section, with parts in elevation, taken along line 13—13 of Figure 12;

Figure 14 is a fragmental view taken

along line 14—14 of Figure 11, of a brush and contact in engagement;

Figure 15 is a fragmental view of the arrangement of the pawl magnet limit switches and operating cam;

Figure 16 is a diagrammatic representation of the control panel, showing particularly the relation of the coils and contacts of the various switches; and

Figure 17 is a simplified diagram of the control system.

For a general understanding of the invention, reference may be had to Figure 1 wherein various parts of the system are indicated by legend. The car is driven by the elevator motor. This motor receives its power from the generator of a motor generator set. An exciter, for supplying current to the generator and elevator motor fields and the control circuits, is driven by the motor of the motor generator set. The driving motor is started by a start control switch arranged in the car. The starting of the car is under the control of an operator in the car, a master control switch being provided for this purpose. The master control switch is not employed to determine the direction of travel of the car, a separate switch, to be known as the "director switch", being provided for this purpose. The "director switch" is moved to "neutral" position at the terminal floors by the "director switch" hatchway cams. A "director switch" motor is provided for moving the "director switch" into reversed position.

The car is stopped by means of the automatic floor stop machine at the intermediate floors and the "director switch" at the terminal floors. A consecutive-stop switch is provided in the car for controlling the operation of the automatic floor stop machine. A safety switch is provided in the car for stopping the car in the event of an emergency. An emergency switch is provided in the car for operating the car with the gate and doors open. A "director switch" motor switch also is provided in the car for reversing the direction of travel of the car at will.

A leveling switch and leveling cams may be provided for causing the car to be brought to the landing in the event that an exact stop has not been made. The master control switch also controls the gate operating motor to effect the opening and closing of the car gate and well doors.

The system will be described as applied to a ten floor installation. It is to be understood, however, that the system may be arranged for any number of floors, ten being chosen merely for purposes of description.

Referring to Figures 2, 3 and 4, the details of the preferred form of a "director switch" will be described. This switch, designated as a whole by numeral 20, is enclosed in a suitable casing 21 and casing cover plate 22. The casing is provided with brackets 23 and bosses 24 arranged for mounting the switch on the elevator car frame 119, as illustrated in Figures 5 and 6. Within the casing and secured, as by screws, to a plurality of bosses 25 extending from the casing base 26 is an annular contact support 27. This support has two arcuate slots 28 and 30 in which a plurality of insulating contact bases 31 are adjustably mounted. Suitable spring contacts are secured to these bases, contacts 33 and 32 controlling the circuits for the actuating coils of the up and down direction switches, respectively, and contacts 34, 35, 36 and 37 controlling the circuits for the actuating coils of the accelerating switches. Two feed contacts 38 and 40, similar in construction to the control contacts, are mounted on a support 41 of insulating material. This support, along with an intervening insulating strip 42, is secured to an arcuate boss 43 formed on the contact support 27.

Segment 44, for bridging the above mentioned contacts, comprises an arcuate channel member, formed of an outer flanged portion 45, inner flanged portion 46 and connecting web 47, and a supporting arm 48. The outer flange 45 is arranged for bridging either set of control contacts, 32, 34 and 35, or 33, 36 and 37, while the inner flange 46 is arranged to engage either feed contact 38 or 40. It will be observed that a circuit may thus be completed from either feed contact to the corresponding set of control contacts. Oil wipers 50 and 51 are mounted on insulating support 41 to engage the contact surfaces of flanges 45 and 46 respectively. The supporting arm 48 is mounted on shaft 52 between two insulating plates 53 and 54. A projection 55 on plate 54 extends through an aperture 56 in supporting arm 48 into a recess formed in plate 53. Shaft 52 extends through an inner aperture 57 formed in projection 55 and through plate 53. Two other projections 58 are formed on plate 54 and are disposed diametrically opposite the projection 55. These latter projections are similarly arranged to extend through apertures in supporting arm 48 into recesses in plate 53. A sleeve 60, arranged on shaft 52, is formed with a flange 61 adjacent to plate 53. Flange 61, plate 53 and projections 58 are apertured to receive studs 62. Nuts 63, on the threaded ends of these studs, clamp the supporting arm 48, plates 53 and 54 and a separating washer 64 against the flange 61. It will be observed that with this arrangement the segment 44 is completely insulated from the flange 61 and shaft 52. A pinion 65 is arranged on shaft 52 in abutting relation with the end of sleeve 60. The pinion, sleeve and segment are held in assembled relation against a shoulder 66, formed on shaft 52, by means of a nut 67 and

locking pin 68. A key 70, mounted in a keyway in shaft 52, forms a driving connection between pinion 65 and sleeve 60, while the flange 61 and studs 62 form an operating connection between sleeve 60 and segment 44.

Pinion 65 is driven by means of a segmental gear 71. This gear is mounted on the inner end of a driving shaft 72, being secured thereto as by means of a through bolt 73. Shaft 72 extends through its supporting bearing 74 to the outside of the casing. An operating arm 75 is mounted on the outer end of shaft 72, being similarly secured thereto as by means of another through bolt 73. A roller 76, for engaging the "director switch" hatch-way cams 77 (see Figure 1), is mounted on the free end of operating arm 75, Another operating arm 78 and a cam supporting segment 80 are mounted on the shaft 72 between the operating arm 75 and the bearing 74. One end of a connecting rod 81 is pivotally secured, as by pin 82, to the free end of operating arm 78. The other end of connecting rod 81 is secured to the "director switch" reversing mechanism as will be described later.

Shaft 52 also extends through its supporting bearing 83 to the outside of the casing, the other end of the shaft being formed with a positioning flange 84. Within the casing, two friction plates 85 and 86 are mounted on sleeve 60, the sleeve being square in cross section to form a driving connection. These friction plates cooperate with a stationary annular disc 87 to maintain the "director switch" in the position into which it has been moved. The annular disc 87 is provided with apertured lugs 88. Projections 90, extending from base 26, fit into the apertures of the lugs 88 to hold disc 87 against turning. Friction plate 85, arranged on one side of disc 87, abuts against pinion 65. Friction plate 86 is forced against the other side of the disc, and the disc against friction plate 85, by means of springs 91 mounted on the studs 62. These studs extend into apertures 92 formed in friction plates 86.

Adjustable abutment screws 93, mounted in the sides of the casing 21, determine the limits of movement of the segmental gear 71. These screws form stops to prevent the disengagement of the contacts and bridging segment 44 by extreme movement of the segmental gear in either direction. A suitable opening 94 is provided in the casing 21 for the various conductors leading to and from the "director switch" contacts.

A pair of of switches 95 and 96, identical in construction, are secured to the outside of the casing base 26 as indicated most clearly in Figure 5. Each switch is provided with an operating roller 97 disposed in the path of movement of cams 98 mounted on segment 80. Each cam 98 is adjustably secured to the segment as by means of screws 99. The inner screws 99 serve as pivots for the cams while the outer screws 99 extend through slots 89 in the cams to permit adjustment.

Referring to Figure 7, the details of one of the switches 95, 96 will be described. The contact holder 100 for the stationary contact 101 is mounted on a frame 102, of insulating material. The frame 102, comprises two side members 103 (one of the sides not being shown in order that the switch may be more clearly illustrated) and a connecting web 104. The stem 105 of the contact holder extends through the web 104, its extended end being provided with nuts 106 for securing the holder to the frame and for securing the terminal clip of a conductor. The movable contact 107 for engaging the stationary contact is carried by an operating arm 108. The arm 108 is pivotally mounted, as by a pin 110, on a bracket 111. Bracket 111 is provided with a stud 112 which extends through the web 104 and which is provided with nuts 106 for securing the bracket to the frame 102 and for securing the terminal clip of a conductor. Beyond its pivot point the operating arm 108 is formed with two lugs 113 between which extends a pin 114 for pivotally supporting the roller 97. A spring 115, tending to bias the switch to closed position, extends between spring seats, one seat being formed on the extended portion of the operating arm 108 and one on the bracket 111. Apertures 116 are provided for receiving the mounting screws. Thus upon a cam 98 moving under the roller 97, the operating arm 108 is rocked counterclockwise about its pivot causing the separation of the contacts 101 and 107 and the compression of spring 115. As the cam moves off the roller the spring 115 rocks the operating arm clockwise causing the reengagement of the contacts.

Referring to Figures 5 and 6, the preferred form of "director switch" reversing mechanism will be described. The "director switch" motor 117 is mounted on a support 118 secured to the car frame 119. One end of the motor shaft has secured thereto a pinion 120. The motor operates a segmental gear 121 through pinion 120, the segmental gear being pivotally supported by a bracket 122 depending from support 118. The segmental gear 121 in turn operates the "director switch" through the connecting rod 81 and arm 78. The connecting rod 81 comprises an end piece 123, pivotally mounted on a pin 124 provided on the segmental gear 121, a rod 125, buffer spring 126, and buffer spring yoke 127. As illustrated in Figure 8, a threaded bushing 128 is adjustably mounted in one end of yoke 127, a nut 130 being provided for locking the bushing in adjustable position. The rod 125 extends slidably through the bushing, the free end of the rod being reduced in diameter to form a shoulder. A piston 131 is secured to the extreme end of rod 125 and is arranged

to slide in the cylinder 132 formed in the yoke 127. The buffer spring 126 is disposed in an opening 133 provided in the yoke 127 and extends between washers abutting against the shoulder on rod 125 and the shoulder formed by the piston 131. The purpose of this arrangement is to absorb any shocks caused by sudden movement of either the "director switch" motor or operating arm 78 as will be seen from later description.

It will be noted, upon reference to Figure 1, that the bottom floor hatchway cam 77 extends up the hatchway so as to engage the "director switch" roller 76 with the car quite a distance from the terminal landing, the distance depending upon the particular installation. During downward movement of the car, the initial engagement of the cam and roller causes the "director switch" to be moved into a position to cause a reduction in the speed of the car. From this point of engagement, the cam 77 slopes gradually to the left down to the point where it moves the "director switch" to "neutral" position. From this latter point, the cam is vertical, the "director switch" being moved into reversed position by the "director switch" motor 117 as will be described later. The cam at the top floor is identical in construction but reversed so as to move the "director switch" from up position into "neutral" position.

In operation, assume that the "director switch" is in down position, as indicated by roller 76 and operating ram 75 in broken lines, Figures 2 and 5, and in full lines in Figure 6, it being noted that the rear view of the "director switch" is illustrated in Figure 5. In this position, flange 45 bridges control contacts 32, 34 and 35 and flange 46 engages feed contact 38. As the car approaches the bottom floor, roller 76, engaging cam 77, is carried gradually to the left. The initial movement of arm 78, due to the engagement of the cam and roller, causes the yoke 127 to slide to the left on the rod 125 and piston 131, the portion of the yoke forming the right end of opening 133 acting through the washer to compress the spring 126 against the shoulder formed on rod 125. By employing the initial force to compress the spring in this manner, the inertia of the parts of the reversing mechanism is gradually overcome and the movement of arm 78 is transmitted to the "director switch" motor through segmental gear 121 without strain. As a result of the initial movement of roller arm 75, the segmental gear 71 rotates segment 44 in a counter-clockwise direction. In this manner the circuits controlled by contacts 35, 34 and 32 are broken in the order of the contacts named. As the roller arm is moved into "neutral" position flange 46 moves off feed contact 38. Motor 117 is energized, in a manner to be described later, to move the "director switch" from neutral into up position. The initial movement of the segmental gear 121 caused by the rotation of motor 117 causes the rod 125 and piston 131 to slide to the left in the yoke 127, the piston acting through the washer to compress spring 126 against the inner end of the bushing 128. In this manner the movement of the motor 117 is similarly transmitted to the "director switch" without strain. Thus as the "director switch" is moved into up position, similarly indicated by broken lines in Figures 2 and 5, segment 44 is caused to engage contacts 40, 33, 36 and 37, preparing the control circuits for up operation of the car. The friction plates 85 and 86 and disc 87 permit the movement of the segment 44 but, after the reversing operation, hold it in reversed position. Under normal operation, therefore, the segment 44 remains in up position until similarly but oppositely moved by the hatchway cam 77 and motor 117 at the top floor into down position. Again, the friction plates and disc maintain the switch in this last moved position. Thus the "director switch" is normally in one of its on positions.

The "director switch" motor is deenergized, upon the completion of each reversal of the "director switch", by the opening of either switch 95 or switch 96, depending on the position into which the "director switch" is moved. As previously explained, these switches are opened by the engagement of their operating rollers 97 and the cams 98. With the "director switch" in one of its reversed positions, the corresponding switch 95 or 96 is maintained open by its cam 98, as illustrated for switch 95 in Figure 5. As will be described in conjunction with the description of operation of the system as a whole, means are provided for causing the motor 117 to reverse the "director switch" at any point at the will of the operator in the car. It is to be noted however that the "director switch" cannot be reversed into its former position at the terminal landings due to the fact that the vertically extending portions of the hatchway cams 77 act as stops. The automatic floor stop machine may be arranged to cause the motor 117 to reverse the "director switch" at any floor as will be described later.

Reference may now be had to Figures 9 and 11 inclusive which illustrate the various details of a preferred form of automatic floor stop machine. This machine, designated as a whole by the numeral 135, comprises a frame formed by a base member 136, four standards 137, 138, 140 and 141 and a top member 142. The standards are secured in sockets formed in bosses 143 on base member 136 and sockets formed in bosses 144 on top member 142. Eight switches are provided on the machine, namely, the up "automatic" first slow-down switch 145, second slow-down switch 146, stop switch 147 and door sequence switch 148,

and the down "automatic" first slow-down switch 150, second slow-down switch 151, stop switch 152 and door sequence switch 153.

Referring particularly to Figure 9 the up "automatic" switches 145, 146, 147 and 148 are mounted on a bracket 154 secured to top member 142 as by bolts. Each switch comprises a stationary contact 155 and a movable contact 156. These contacts may be of any well known construction. The stationary contacts are mounted on an insulating contact plate 157 supported by the bracket 154. Each stationary contact is provided with nuts 158 for securing the contact to the contact plate and for connecting the respective switch in the system. Each movable contact is mounted in an arm 160 of a contact lever, lever 161 being for the first slow-down switch, lever 162 being for the second slow-down switch, lever 163 being for the stop switch and lever 164 being for the door sequence switch. With the switches in closed positions, each movable contact is pressed into engagement with its corresponding stationary contact by means of a spring 165. Each movable contact is insulated from its contact lever and is connected, as by a flexible conductor 166, to a corresponding binding post 167 on contact plate 157. All the contact levers are pivotally mounted on a pin 168 supported by arms 170 depending from bracket 154. The other arm 171 of each lever is enlarged to form a weight. Each weight acts as a bias tending to move its respective switch to closed position. Also pivotally mounted on pin 168, preferably between contact levers 162 and 163, is a bell crank lever 172. The vertical arm 173 of the bell crank lever is T shaped, the cross member 174 of the T being provided with lugs 179 which extend into the paths of the contact levers. Abutment screws 175, 176, 177 and 178, adjustably mounted in the arms 160 of contact levers 161, 162, 163 and 164 respectively, are arranged for engagement by the lugs 179 during the operation of the switches The abutment screws are preferably adjusted so that first screw 175, then screw 176 and then screws 177 and 178 are engaged by the corresponding lugs 179 on the cross member 174 to cause the consecutive opening in the order named of the first slow-down switch 145, the second slow-down switch 146 and then simultaneously the stop switch 147 and door sequence switch 148 respectively. It is to be understood that refinements of adjustments may be made to suit the operating conditions of the particular installation. A socket 180 is pivotally mounted on the horizontal arm 181 of bell crank lever 172. A vertical tube 182 is secured in socket 180, as by means of a pin 183. This tube extends into and is similarly secured in another socket 184. The socket 184 is pivotally mounted on the horizontal arm 185 of a bell crank lever 186. Bell crank lever 186 is pivotally mounted between supports 187 formed on base member 136.

The down "automatic" switches 150, 151, 152 and 153 are identical in construction with the corresponding up "automatic" switches 145, 146, 147 and 148, above described, and are similarly mounted on bracket 188. The mechanical construction of the closing mechanism is similar. The horizontal arm 190 of the top bell crank lever 191 and the horizontal arm 192 of the bottom bell crank lever 193, however, extend to the left instead of to the right as do the corresponding arms of bell crank levers 172 and 186. Thus to open switches 145, 146, 147 and 148, tube 182 must move in the up direction as indicated, while to open switches 150, 151, 152 and 153, tube 194, extending between levers 191 and 193, must move in the down direction. The depending arms 195 of the bottom bell crank levers 186 and 193 are joined by means of a cross rod 196. With the cross rod connection, tube 182 must be pulled in the up direction in order to effect the downward movement of tube 194 and, conversely, tube 194 must be pulled in the up direction in order to effect the downward movement of tube 182. Thus the weight of one tube is counterbalanced by the weight of the other. An adjustable screw stop 197 extends through a connecting web 198 for supports 187 into abutting relation with end piece 200 provided on cross rod 196. A weight 201, provided in the lower end of tube 182, serves to unbalance tubes 182 and 194 and acts as a bias tending to maintain the switch opening mechanism in normal position, i. e., the position in which end piece 200 engages screw stop 197. The screw 197 is so adjusted that, with the switch opening mechanism in normal position, the "automatic" switches will be free to return to closed positions. A preferred form of mechanism for causing the operation of the switches will now be described.

Referring to Figure 1, the automatic floor stop machine is driven preferably by means of two steel tapes 202 and 203 attached to the car. Tape 202 extends from the top of the car to an overhead sheave 204 around which it is wound in a manner similar to the winding of a measuring tape. The other tape 203 extends from the bottom of the car around a tension sheave 205 and then up to a second overhead sheave 206 upon which it is similarly but oppositely wound. These overhead sheaves are keyed to the operating shaft 207 of the automatic floor stop machine, one tape winding up as the other unwinds in the driving operation. This silent drive is as positive as a sprocket chain and is unaffected by sliding or stretching ropes.

Referring again to Figure 9, the base member 136 is formed with a centrally disposed pedestal 208. This pedestal and the boss 143, for standard 137, are arranged to provide

bearings 210 and 211 respectively for the shaft 207. The pedestal 208 is further arranged to receive a vertical bearing 212 and to support a ball thrust bearing 213 for screw 214. This screw extends vertically into a bearing 215 formed in the top member 142. A beveled gear 216 is secured, as by pin 217, to the lower end of screw 214. Another beveled gear 218, engaging gear 216 in a driving relation, is secured, as by pin 220, to operating shaft 207. Operative engagement between the beveled gears is maintained by positioning collars 221 secured on shaft 207.

A crosshead, (see Figure 11), comprising a forked end 222, a nut 223 and frame 224 extending therebetween, is arranged to be driven by screw 214. The forked end 222 engages a vertically extending bar 225 to form a guide for the crosshead. Bar 225 is secured to lugs 226 and 227 formed on base member 136 and top member 142 respectively. A pawl magnet frame 228 is carried by the crosshead nut 223, being secured thereto as by bolts. Frame 228 is arranged to receive the pawl magnet 230. The pawl magnet comprises a coil 231 and central core 232. Non-magnetic plates 233, positioned at each end of the pawl magnet, are secured to the frame 228 as by means of through bolts 234. These plates form a mounting for the pawl magnet, being provided with recesses 235 into which the core 232 extends. The pawl magnet armatures 236 and 237 are pivotally mounted, as by means of pins 238, on arms 240 extending outwardly in opposite directions from the top and bottom of frame 228. The non-magnetic plates 233 further serve as spacing members to prevent armatures 236 and 237 from being held in by residual magnetism. Armature 236 extends inwardly from its pivot point to form an arm 241. The end of arm 241 is bifurcated to slidably engage a sleeve 242, the sleeve being mounted on a pin 243 secured in frame 228. A spring 244 is arranged on pin 243 above the sleeve in such manner as to be compressed by arm 241 when the armature is drawn in by pawl magnet 230. Between its end and pivot point, the arm is enlarged to form a weight 245. Spring 244 and weight 245 act to move the armature into unattracted position when the pawl magnet coil 231 is deenergized, the spring acting to give rapid initial movement. An adjusting screw 246, provided in arm 241, engages frame arm 240 to determine the amount of outward movement of the armature. Armature 237 is similarly arranged with an arm, slot, pin, spring and adjusting screw but is reversed. Thus its weight 247, in order to function properly, extends outwardly from the pivot point. Pawls 248 and 250 are secured, as by screws, to armatures 236 and 237 respectively, pawl 250 being reversed to correspond with its armature. These pawls, with armatures 236 and 237 in unattracted position, are arranged to engage stopping collars 251 provided on tubes 182 and 194. Each tube is provided with nine of these stopping collars, tube 182 with collars for the second to the tenth floors inclusive for operative engagement by pawl 250, to stop in the up direction and tube 194 with collars for the ninth to the first floors inclusive for operative engagement by pawl 248 to stop in the down direction. Each collar 251 may be formed with a U bolt 252 and clamping plate 253 so as to be readily adjustable.

The "automatic" first slow-down switches 145 and 150 are arranged in the circuits for the actuating coils of second and third accelerating switches. The "automatic" second slow-down switches 146 and 151 are arranged in the circuits for the actuating coil of the first accelerating switch. The "automatic" stop switches 147 and 152 are arranged in the circuits for the actuating coils of the up and down direction switches respectively. The "automatic" sequence switches 148 and 153 are arranged in parallel relation in the circuit for one of the coils of the door contact sequence relay. These circuits are clearly shown in the diagram in Figure 17, reference to which will be had later.

In operation, assuming that the car is running in the up direction, the crosshead nut 223 is driven upwardly, by the steel tapes 202 and 203, shaft 207, beveled gears 218 and 216 and screw 214 in the manner previously indicated, in proportion to the movement of the elevator car. Pawl magnet coil 231 being energized, the pawl magnet armatures 236 and 237 are in their attracted positions and the pawls 248 and 250 do not engage the stopping collars. Assuming that it is desired to stop at the seventh floor, as the car approaches the seventh floor stopping zone, the operator centers the car switch causing the deenergization of the pawl magnet coil. The operation of effecting the energization and deenergization of the pawl magnet will be set forth in detail in connection with the description of operation of the system as a whole. Pawls 248 and 250 are now forced out into their unattracted or stop positions by the armature weights and springs. This is the position illustrated in Figure 9. As the crosshead is driven farther in the up direction, pawl 250 engages the seventh floor stopping collar 251 on tube 182. The tube 182 is then moved in the up direction with the crosshead, operating bell crank lever 172 to open the first slow-down switch 145, the second slow-down switch 146 and the stop switch 147 and door sequence switch 148 in the order named. The car, and therefore the crosshead, is then brought to a stop in a manner to be described later. It will be noted that the bell crank levers 172 and 186 are moved counter-clockwise about their pivots, during

the switch opening operation, moving tube 182 and consequently stopping collar 251 to the left. Thus, if there is excessive movement of the crosshead due to the fact that the car has not been stopped, no injury to the machine results because the stopping collar is finally withdrawn from operative engagement with the pawl by the movement of the levers. The back surface 254 of each pawl is so inclined that, for example in the above operation, as the back surface of pawl 248 strikes a stopping collar, the pawl slides over the collar without operative engagement. "Automatic" switches 150, 151, 152 and 153 are opened, due to the connection between tubes 182 and 194, at the same time that switches 145, 146, 147 and 148 are opened. As the control circuits in which switches 150, 151, 152 and 153 are included are broken, due to the fact that the "director switch" is in up position, the opening of these switches is without effect at this time.

The "automatic" switches are held in open position until the pawl magnet coil 231 is again energized. When this coil is energized pawl 250 is withdrawn from operative engagement with the seventh floor stopping collar. Weight 201 then acts to move tube 182 downwardly and tube 194 upwardly until stopped by the engagement of screw stop 197 and cross rod end piece 200. Bell crank levers 172 and 191 are thus moved out of operative engagement with the abutment screws, permitting the "automatic" switches to close. It is to be noted that, due to abutment screws 177 and 178 having the same adjustment, the stop switches and door sequence switches close simultaneously.

Referring now more particularly to Figures 10 and 11, a plurality of bars 255 of insulating material are arranged between standards 140 and 141 to form mountings for the automatic floor stop machine stationary contacts. Both of these standards are provided with a plurality of adjustable collars 256, the corresponding collars on each standard being arranged in horizontal alignment to support the insulating bars 255. The stationary contacts are arranged on the bars 255 in two columns, those in column 257 being designated reversing contacts and being arranged in the control circuits for the "director switch" motor 117, and those in column 258 being designated stop contacts and being arranged in the control circuits for effecting the deenergization of the pawl magnet. The stationary contacts are secured to the insulator bars 255 as by bolts 260. These bolts also secure insulating plates 261 on top of the contacts in column 258. The stationary contacts are engaged by traveling brushes to effect the automatic stopping of the car and the reversal of its direction of travel. For convenience of description stationary contacts are illustrated for only the second and ninth of the intermediate floors, it being understood that the contacts for the intermediate floors are arranged to suit the requirements of the particular installation.

The traveling brushes for engaging the stationary contacts are mounted on a panel 262, the panel being secured, as by bolts 263, to lugs 264 formed on the crosshead frame 224. Only one reversing brush 265 is provided for engaging the reversing contacts in column 257 while two brushes, up stop brush 266 and down stop 267, are provided for engaging the stop contacts in column 258. The system is arranged so that, of the stop brushes, only the up stop brush 266 is "alive" during up motion of the car and only the down stop brush 267 is "alive" during down motion of the car. The brushes 265, 266 and 267 are identical in construction, the details of one of the brushes being illustrated in Figures 12 and 13.

Referring to Figures 12 and 13, the brush contact pieces 268 are pivotally mounted in the brush frame 270, as by means of a pin 271 supported by the frame arms 272. The brush contact pieces are preferably provided with slots 273, through which the pivot pin 271 extends, so as to permit their longitudinal as well as pivotal movement. Longitudinal recesses 274 are formed in the brush contact pieces to receive springs 275. These springs abut yieldingly against pivot pin 271, tending to maintain the contact pieces in their outer position. The frame arms 272 and washer 276 close slots 273 to maintain the springs 275 in position.

A centering blade 277 for the brush contact pieces is loosely mounted on guide bushing 278. The bushing 278, along with a washer 280, is secured to the yoke 281 of the brush frame 270, as by means of a screw 282. A compression spring 283 is mounted on bushing 278 between centering blade 277 and washer 280. The outer end of the centering blade is bent in such manner as to form continuous engagement with the elongated surfaces of the contact pieces. Thus, when the brushes are not in engagement with a stationary contact, the centering blade tends to maintain the brush contact pieces in central position. Upon engagement of the brush and a stationary contact however, the contact pieces are rocked about their pivot pin 271, moving the outer end of the centering blade to the left, as viewed in Figure 13, against the force of compression spring 283. It will be observed that the centering blade acts as a lever, slidably pivoted against yoke 281, further to compress the spring 283 during this operation. Thus, as the brush leaves the stationary contact, the compression spring causes the centering blade to restore the contact pieces to their central position. As the circuit completed by the brush and stationary contact is from the frame and centering

blade into the contact pieces, it will be seen that the circuit is not broken by rocking the contact pieces in either direction about their pivot pin. In Figure 14, the up stop brush 266 is illustrated in rocked position in engagement with one of the stationary stop contacts.

Referring to Figures 11 and 15, a pair of switches, 284 for the top floor and 285 for the bottom floor, are mounted on standard 138, the switches being of the same construction as the switch illustrated in Figure 7. Each switch is mounted on a plate 286 by means of through bolts 287. Each plate is adjustably secured to the standard 138 by means of a U bolt 288. A cam 290 for engaging the rollers 97 of the switches is secured, as by screws, to a prong 291 of the forked end 222 of the crosshead. The switches 284 and 285 serve as limit switches to insure the deenergization of the pawl magnet upon the car reaching the terminal landings. As will be seen from later description, the engagement of a stop brush and stop contact at a terminal landing serves substantially the same purpose as the opening of the corresponding switch 284 or 285, so that the stop contacts at the terminal landings may be omitted if desired.

In operation, assuming that the car is moving in the up direction, the crosshead, and therefore the cam 290, brushes 265, 266 and 267 and pawl magnet 230, is moved upwardly in proportion to the movement of the elevator car as has previously been explained. Stops at floors between the first and tenth are then made by the operator centering the car switch. As the car approaches the tenth floor, the contact pieces of the up stop brush 266 strike the insulating bar 255, rock and sweep across the tenth floor stop contact 294 and the cam 290, carried by the crosshead, causes the opening of switch 284. The engagement of the brush and contact and the opening of switch 284 causes the circuit for the pawl magnet coil to be broken so that deenergization of the pawl magnet is assured regardless of the position of the car switch. The "automatic" switches therefore are opened in the manner previously described. Although the automatic floor stop machine may act to stop the car at the terminal landings, it is preferred to employ the "director switch" for this purpose. The stop is insured, however, by the opening of the "automatic" switches. Before the car reaches the tenth floor landing, brush 265 engages the tenth floor reversing contact 295, preparing a circuit for the "director switch" motor. This circuit is completed by one of the control switches during the stopping operation to move the "director switch" from "neutral" position, where it has been moved by the hatchway cam 77, into reversed position. A stop at the first floor with the car moving downwardly is made in a similar manner.

If it is desired to have the car operate between the second and the ninth floors, the stop and reversing contacts for the second and the ninth floors are rendered "alive" in a manner to be described later. As the car approaches the ninth floor, the contact pieces of the up brush 266 strike the insulating bar 255, rock and sweep across the ninth floor stop contact 292. The engagement of the brush and contact causes the circuit for the pawl magnet coil to be broken so that deenergization of the pawl magnet is assured regardless of the position of the car switch. Since the stopping collars 251 for the floors are positioned so as to cause the opening of the first slow-down switch 145 or 150 with the car at a definite distance from the floor, the stop brushes and contacts are arranged to engage at such time as to insure the release of the pawls before the corresponding stopping collars are reached. As the car continues its movement, the "automatic" switches 145, 146, 147 and 148 are opened in sequence, as previously described, causing the slow-down and stop of the car. Before the car reaches the ninth floor landing, brush 265 engages the ninth floor reversing contact 293, preparing a circuit for the "director switch" motor. This circuit is completed by one of the control switches during the stopping operation to cause the reversal of the "director switch". A stop at the second floor with the car moving downwardly is made in a similar manner. It is obvious that the automatic floor stop machine may be arranged to cause the car to operate between any pair of landings as terminals. In such an event, stop contacts and reversing contacts are provided on the automatic floor stop machine for each floor. Also means are provided for each floor for rendering these contacts "alive", as will be seen from later description.

The reversing contacts are preferably made longer than the stop contacts to insure their engagement by brush 265 when the control switches operate to complete the circuit for the "director switch" motor, these contacts and brush 265 being positioned so as to remain in engagement with the car at rest at the floor. The brushes are caused to rock and sweep across their corresponding contacts in order to insure positive engagement.

When the car is stopped at a terminal landing, for example floor ten, the contact pieces of brush 265 are in engagement with contact 295 and are therefore in a rocked position. When the car starts in the down direction, these brush contact pieces must reverse, that is, rock into the other position. In the event that the contact pieces are caught in any manner, their reversal is permitted by the slots 273 and springs 275.

The stopping collars 251 are adjusted so

as to be engaged by the pawls with the car at the desired stopping distance from the corresponding floors, the insulating bars 255 being adjusted on standards 140 and 141, by means of the collars 256, to correspond. The leads (not shown) for the pawl magnet coil 231 are connected to certain of the binding posts on panel 262. The other binding posts are provided for the brushes mounted on the panel. Flexible conductors (not shown) extend from these binding posts to similar binding posts (not shown) on panel 296. The flexible conductors are suspended in very much the same manner that flexible cables are suspended from an elevator car. Panel 296 is secured to standard 138 as by means of a U clamp 297.

Reference may now be had to Figure 17 which illustrates diagrammatically the various control and power circuits. No attempt is made in this figure to show the coils and contacts of the electromagnetic switches in their associated positions, a "straight diagram" being employed wherein the coils and contacts of the various switches are separated in such a manner as to render the circuits involved relatively simple. For a clearer understanding of the invention, the stationary contacts of the switches are illustrated in cross section. The relation of the coils and their contacts may be seen upon reference to Figure 16, which illustrates the arrangement of the switches on the control panel. These electromagnetic switches have been designated as follows:—

A—potential switch,
B—up direction switch,
C—down direction switch,
D—first accelerating switch,
E—second accelerating switch,
F—third accelerating switch,
H—motor field switch,
I—door contact sequence relay,
J—minimum current field relay,
K—driving motor starting switch,
L—driving motor running switch,
M—driving motor starting relay,
N—protective relay,
O—accelerating relay,
P—up non-interference relay,
Q—down non-interference relay,
R—slow-down switch,
S—load switch,
T—leveling switch motor relay,
V—gate motor switch,
W—maintaining relay,
X—series field relay,
Y—series field switch,
Z—speed control switch,
US—up stop switch,
DS—down stop switch,
LU—up slow speed leveling relay,
LD—down slow speed leveling relay,
LF—fast speed leveling relay.

Throughout the description which follows, these letters, in addition to the usual reference numerals, are applied to the parts of the above enumerated switches. For example, contacts B 438 are contacts on the up direction switch, while actuating coil A 390 is the coil that operates the potential switch. The electromagnetic switches are all shown in their deenergized positions.

An alternating current driving motor 300 of the squirrel cage type and a variable voltage direct current generator 301 constitute a motor generator set, as illustrative of one form of power supply suitable for the present system. 302, 303 and 304 are the alternating current mains, resistances 305 being arranged in the mains for the purpose of starting the driving motor. The elevator motor is designated by the numeral 306. An exciter 307, driven by the motor 300, is employed to supply current for the separately excited fields, 308 for the generator and 310 for the elevator motor, and for the control circuits. The armature of the exciter is designated by the numeral 309. The generator is provided also with a series field 311. The exciter is provided with a shunt field 312 and a series field 313. Discharge resistances 314 and 315 are provided for the separately excited fields of the generator and elevator motor respectively. A resistance 316 is arranged in shunt to the generator series field. A resistance, arranged in sections 317, 318, 320, 321, 322, 323, 324, 325, 326 and 327, is provided for controlling the strength of the generator separately excited field and therefore the voltage applied to the elevator motor armature. Resistances 328 and 329 are arranged in series with the elevator motor field. 330 is the release coil for the elevator motor electromagnetic brake. Coil 330 is provided with discharge resistances 331, 332 and 333 for controlling the application of the brake under different conditions of operation. Coil 330 is provided also with a cooling resistance 334. 336 is the armature and 337 is the field of the motor 335 for moving the rollers of the leveling switch so as to clear the leveling cams. The armature of the gate operating motor 338 is designated by the numeral 340, the field being designated 341. Various safety and emergency switches and door and gate contacts may be employed, reference to which may be had in connection with the description of the various circuits and of the operation of the system.

Referring briefly to Figure 1, the master control switch, designated as a whole by the numeral 342, comprises four pairs of contacts 343, 344, 345 and 346 and contact bars 347 and 348 for bridging the contacts of the pairs. The contact bars are mounted on a pivoted segmental support 350, of insulating material, the support being operated by means of the control handle 352. It is pre-

ferred to provide centering springs (not shown) on the master control switch to cause it to be returned to "neutral" or off position when released by the operator. The switch has three operative positions to be hereinafter referred to as position I, position II and position III. Upon counter-clockwise movement of the switch to position I, the contact bar 348 bridges contact 345 to cause the operation of the gate closing mechanism. Upon further counter-clockwise movement of the switch to position II, the contact bar 347 bridges contacts 344 and the contact bar 348 bridges contacts 346 to cause the starting of the car. It is to be noted that the master control switch is always moved in the same direction, i. e., counter-clockwise, to start the car. Upon reverse or clockwise movement of the switch to position III, the contact bar 347 bridges contacts 343 to cause the operation of the gate opening mechanism. The manner in which these operations are effected will be described later.

Referring back to Figure 17, assuming that the control switches 353 and 354 are closed, in order to start the driving motor 300, the start control switch 355 in the car is closed. A circuit is thus completed for the actuating coil M 356 of the driving motor starting relay and may be traced from alternating current main 303, by way of line 358 through switches 355 and 353, coil M 356 and contacts N 361, to main 304. The relay operates to cause the engagement of contacts M 362 completing the circuit for the actuating coil K 363 of the driving motor starting switch, and the engagment of contacts M 364 preparing the circuit for the actuating coil L 365 of the driving motor running switch. The circuit for coil K 363 may be traced from alternating current main 303, line 358, by way of line 366 through contacts M 362, coil K 363 and contacts L 367, back to line 358, contacts N 361, to main 304. The switch K operates immediately to cause the engagement of contacts K 368, K 370 and K 371 connecting the stator of the driving motor to the power mains through resistances 305 and completing the circuit for coil L 365. The circuit for coil L 365 may now be traced from main 302, contacts K 368, one of the resistances 305, by way of line 372 through coil L 365 and contacts M 364, another one of the starting resistances 305, contacts K 370, to main 303. The switch L, however, does not operate immediately, the voltage applied to its actuating coil being of low value due to the high potential drop over resistances 305 during the starting of the motor. As the driving motor approaches full speed, the current in the stator windings is reduced raising the voltage across coil L 365, causing the switch L to operate. The switch L, upon operation, causes the engagement of power contacts L 374, L 375 and L 376 to by-pass resistances 305 and connect the driving motor directly to the mains. Also the switch L causes the separation of auxiliary contacts L 367 to deenergize the coil K 363 and of auxiliary contacts L 378 to remove the short circuit around the actuating coil J 380 of the minimum current field relay. The switch K drops out separating contacts K 368, K 370 and K 371 to disconnect resistances 305 from the mains. The operation of relay J will be explained later.

The E. M. F. of the exciter 307 builds up to its full value as the driving motor 300 comes up to full speed. As has been stated previously, the exciter supplies current for the field 310 of the elevator motor 306. According to the preferred arrangement however, with the motor generator set running but with the elevator motor at rest, this current is reduced providing what may be termed a "standing field". The resistance 328 is employed for this purpose. The elevator motor field circuit may be traced from the left hand (+) exciter terminal 381, line 382, by way of line 383 through field 310, coil J 380, resistance 328 and contacts Z 384 of the speed control switch and contacts F 385 of the third accelerating switch arranged in parallel relation, line 386, to the right hand (−) exciter terminal 387. It is not desired to apply full exciter voltage to the field 310 when the elevator motor is not in operation because of increased power consumption. On the other hand, it is not desired to have the field 310 deenergized with the elevator motor at rest as a matter of safety and because of the large time constant involved in building up.

As has previously been explained, contacts L 378 separate as the driving motor 300 comes up to full speed. The actuating coil J 380 of the minimum current field relay, therefore, does not receive current until the exciter E. M. F. is built up to substantially full value. Until the elevator motor field builds up however, the field having a large time constant, this current is of insufficient value to cause the operation of relay J. As soon as the elevator motor field builds up substantially to full "standing field" value, relay J operates to cause the engagement of contacts J 388. The circuit for the potential switch actuating coil A 390 is completed upon the engagement of contacts J 388 and may be traced from terminal 381, line 382, by way of line 391 through switch 354, contacts A 392, contacts J 388, coil A 390, various safety switches (indicated by legend) and safety switch 393 in the car, line 386, to terminal 387. Thus the circuit for coil A 390 cannot be completed and therefore the potential switch cannot operate until the exciter E. M. F. has built up substantially to full value and until the elevator motor field 310 has built up substantially to full "standing field" value. By this arrangement, injury to the system such as would result from dangerous speeds of the elevator motor is

prevented. In order that this may be clearly seen, assume that the system is not provided with the relay J and the contacts L 378. Upon starting up, due to its large time constant, the elevator motor field 310 builds up much more slowly than the E. M. F. of the exciter. Thus the potential switch would operate before the elevator motor field built up and, if the operator had thrown the master control switch to position II to start the car immediately after closing the start control switch, the elevator motor would start up on a weak field and would tend to run away. By providing the system with the minimum current field relay J, starting the elevator motor on a weak field in this manner is prevented since the motor field current must be of sufficient value to effect the operation of the relay. As a further example, assume that the system is provided with the minimum current field relay but not with the contacts L 378. Should the start control switch be opened after the elevator motor field has built up, the current through coil J 380 would reduce slowly, due to the large time constant of the elevator motor field. Thus if the start control switch should be closed and the master control switch should be moved to start position before the relay J dropped out to break the potential switch coil circuit, again the elevator motor might be caused to operate with a weak field due to the exciter E. M. F. building up relatively rapidly. By providing the system with the contacts L 378, starting the elevator motor on a weak field in this manner is prevented since the contacts J 388 are separated immediately the start control switch 355 is opened. More specifically, opening of switch 355 deenergizes the actuating coil M 356 of the driving motor starting relay. Contacts M 362, therefore, separate, deenergizing coil L 365, the contacts L 378 engaging in turn to short circuit the coil J 380.

Assuming then that contacts J 388 are closed and that coil A 390 is energized, the potential switch operates to cause the engagement of contacts A 394, A 395 and A 396 and to cause the separation of contacts A 392. The engagement of contacts A 394 and A 395 prepares the circuit for the generator separately excited field and the various control circuits. The engagement of contacts A 396 connects the discharge resistances 332 and 333 in parallel across the brake release coil 330. The separation of contacts A 392 inserts the cooling resistance 397 in series with the actuating coil A 390.

Assuming that the above described operations have been completed, the system is now in "normal" operating condition, i. e., ready for starting the car. For convenience of description, it is further assumed that the car is at rest at the first floor, the "director switch" therefore being in its up position with segment 44 bridging contacts 40, 33, 36 and 37, as illustrated. In the starting operation, the operator first moves the master control switch to position I to cause the closure of the gate and door. As previously explained, the master control switch contact bar 348 bridges contacts 345 in position I to cause the operation of the gate closing mechanism. For convenience of description, contacts 345 are arranged to complete a circuit for the gate motor switch actuating coil V 398 and the maintaining relay actuating coil W 399. The circuit for these coils may be traced from terminal 381, by way of line 382 through contacts A 394, line 400, by way of line 401 through coil V 398, coil W 399 and contacts 345, back to line 400, line 402, switch 393, line 391, line 386, to terminal 387. The gate motor switch V, upon operation, causes the engagement of contacts V 403 completing the circuit for the gate operating motor 338. This circuit may be traced from terminal 381, by way of line 382 through contacts A 394, by way of line 400 through resistance 404, contacts V 403, gate motor armature 340 and field 341, line 402, switch 393, line 391, line 386, to terminal 387. The maintaining relay W, upon operation, causes the engagement of contacts W 405 to by-pass master control switch contacts 345 maintaining coil V 398 energized.

Referring briefly to Figure 1, the gate motor 338 operates through linkage 406 to move valve 407 for gate engine 408 to gate closed position and to withdraw the retiring cam 409 from engagement with the roller provided on the end of the door engine valve lever 410. The lever 410 is operated by a spring to move valve 411 for the door engine 412 to door closed position. The gate and door engines operate through mechanism not shown to close the gate and door.

Referring again to Figure 17, if the operator, at any time after he has closed the gate and door and before he has advanced the master control switch to position II, desires to open the gate and door, or if he desires to arrest the movement while the gate and door are closing, he may do so by moving the master control switch to position III. Contacts 343 are thus bridged short-circuiting coil W 399 by means of a circuit comprising contacts D 413 on the first accelerating switch. The maintaining relay drops out separating contacts W 405 to remove the by-pass for contacts 345. Coil V 398 is thus deenergized and the contacts V 403 separate breaking the circuit for the gate operating motor. The spring 414, shown in Figure 1, operates to move valve 407 and, through cam 409 and lever 410, valve 411 to positions to cause the reverse operation of the engines 408 and 412 to open the gate and door. Obviously other forms of power operated gate and door mechanisms and arrangements for controlling such mech-

anisms may be employed without departing from the spirit of the present invention.

Assuming that the gate and doors are closed, the gate contacts 415 and a series of door contacts, indicated by a single set of contacts 416, are in engagement. The operator may now move the master control switch to position II bridging contacts 344 and contacts 346. Contacts 344 prepare control circuits to be completed by the "automatic" switches and complete a circuit for the actuating coil P 417 of the up non-interference relay. The circuit for coil P 417 may be traced from terminal 381, by way of line 382 through contacts A 394, by way of line 418 through coil P 417, contacts 33 and 40 bridged by the "director switch" segment 44, line 420, by way of line 421 through contacts I 422 of the door contact sequence relay, door contacts 416, gate contacts 415 and contacts 344, line 402, switch 393, line 391, line 386, to terminal 387. The operation of the up non-interference relay causes the engagement of contacts P 423 to prepare a circuit for the up direction switch actuating coil B 424, the motor field switch actuating coil H 425, and one coil I 426 of the door contact sequence relay. The operation of the up non-interference relay also causes the engagement of contacts P 427 which, with contacts 346 bridged, completes a circuit for the pawl magnet coil 231. The circuit for the pawl magnet coil may be traced from terminal 381, by way of line 382 through contacts A 394, by way of line 428 through consecutive-stop switch 430 in the car, consecutive-stop switch 431 (to be referred to later), contacts 346, coil 231, contacts US 432 of the up stop switch and contacts DS 433 of the down stop switch, by way of line 434 through contacts P 427 and limit switch 284, line 402, switch 393, line 391, line 386, to terminal 387.

Upon the energization of its coil, the pawl magnet retracts its pawls 248 and 250 allowing the "automatic" switches to close. As has previously been explained, the up "automatic" stop switch 147 and door sequence switch 148 close simultaneously. A circuit is therefore completed for coils B 424, H 425 and I 426 by up "automatic" stop switch 147 and simultaneously a circuit is completed for the oppositely wound coil I 435 of the door contact sequence relay by up "automatic" door sequence switch 148. The circuit for coils B 424, H 425 and I 426 may be traced from terminal 381, by way of line 382 through contacts A 394, by way of line 436 through coil I 426, coil H 425, coil B 424, contacts P 423 and up "automatic" stop switch 147, "director switch" contact 33, segment 44 and contact 40, line 420, by way of line 421 through contacts I 422, door contacts 416, gate contacts 415 and contacts 344, line 402, switch 393, line 391, line 386, to terminal 387. The circuit for coil I 435 may be traced from terminal 381, by way of line 382 through contacts A 394, by way of line 437 through coil I 435 and up "automatic" door sequence switch 148, by way of line 421 through contacts 344, line 402, switch 393, line 391, line 386, to terminal 387. The up "automatic" switches 145 and 146 prepare circuits for the actuating coils of the accelerating switches. It is to be noted that, although the down "automatic" switches are closed, no circuit can be completed by them since the "director switch" is in up position.

The purpose of the door contact sequence relay I is to insure the closure of the gate and doors before starting the car. The coils I 426 and I 435, being differentially wound, oppose each other, when energized simultaneously, to prevent the operation of the relay. If either coil I 426 or coil I 435 is energized ahead of the other, or if either coil alone is energized, contacts I 422 open preventing the starting of the car. If, when the "automatic" switches 147 and 148 are closed, either the gate contacts 415 or any of the door contacts 416 are open, coil I 435 alone is energized resulting in the separation of contacts I 422. The separation of contacts I 422 breaks the circuit for coil I 426, maintaining the door contact sequence relay operated, and for coil B 424, preventing the operation of the up direction switch and therefore the starting of the car. Contacts 345 therefore are bridged ahead of contacts 344 and 346 to effect the closure of the gate and door contact before the "automatic" switches are closed. However, if the master control switch is moved from position I to position II too soon, i. e., so as to cause the closure of the "automatic" switches before the closure of door and gate contacts, the door contact sequence relay operates to prevent the starting of the car. In this manner, starting of the car on the gate contacts is prevented. Assuming that the door contact sequence relay has operated, in order to start the car the master control switch is returned to "neutral" position de-energizing both coils I 426 and I 435, permitting contacts I 422 to re-engage. If the gate and door are not closed, the master control switch is again moved to position I to cause the closure of the gate and door and then to position II to cause the starting of the car. If the gate and door are closed, the master control switch may be moved immediately back to position II. It is believed obvious from the description of the automatic floor stop machine that the "automatic" switches, once closed, remain so until another stop is made. Thus the circuit for both coils I 426 and I 435 in the above described operation is remade by master control contacts 344.

It is preferred to provide the direction switches with a mechanical interlock to prevent their simultaneous operation. Such an interlock may be of the form of a walking

beam pivotally mounted for engaging catches on the plungers of the direction switches as illustrated in Figure 16. Upon operation of the up direction switch in response to the energization of its actuating coil B 424, contacts B 438 and contacts B 440 engage completing the circuit for the generator field 308, contacts B 441 engage rendering up stop brush 266 "alive" and contacts B 443 separate, the last named contacts being in the circuit for the "director switch" motor. The purpose of contacts B 441 and B 443 will be seen from later description. The circuit for the generator field may be traced from terminal 381 by way of line 382 through contacts A 394, line 444, by way of line 445 through slow-down switch contacts R 446 shunting resistance sections 317 and 318, by way of line 447 through resistance sections 320, 321, 322 and 323, load switch contacts S 448 shunting resistance section 324, speed control switch contacts Z 450 shunting resistance section 325, resistance sections 326 and 327, contacts B 438, by way of line 451 through field 308, by way of line 452 through contacts B 440, by way of line 386 through contacts A 395, to terminal 387.

The motor field switch H operates simultaneously with the direction switch B. Switch H, upon operation, causes: the separation of contacts H 453 to disconnect the generator field 308 from the generator armature, of contacts H 454 to disconnect the resistance 333 from across the brake release coil 330 and of contacts H 455 in the circuit by-passing non-stop switches 430 and 431; and the engagement of contacts H 456 to by-pass the master control switch contacts 344, of contacts H 457 to complete the circuit for the brake release coil 330 and of contacts H 458 to short circuit resistance 328 in the circuit for the elevator motor field 310 permitting the motor field to build up to its full strength. The purpose of contacts H 453 and H 455 will be seen from later description. Resistance 333 being of a low value, its disconnection before contacts H 457 engage prevents excess power consumption from lines 382—386. Contacts H 454 and resistance 333 will be referred to again during the description of the stopping of the car. The purpose of by-passing contacts 344 will be explained later. The circuit for the brake release coil 330 may be traced from terminal 381, by way of line 382 through contacts A 394 by way of line 460 through brake release coil 330, brake switch contacts 461 (shown diagrammatically in proper relation in Figure 1) and contacts H 457, by way of line 386 through contacts A 395, to terminal 387.

The brake release coil 330 being energized, the elevator motor field 310 being connected directly to lines 382—386 and current being supplied from the armature 462 of the generator 301 to the armature 463 of the elevator motor 306, due to the generator field 308 being energized, the elevator motor starts. The circuit for the elevator motor armature may be traced from the upper generator armature terminal by way of power line 464 through the generator series field 311 shunted by a portion of resistance 316 and contacts Y 465 of the series field switch, protective relay coil N 466, elevator motor armature 463 and load switch current coil S 467, back to the generator armature 462. As the brake releases, the brake switch contacts 461 separate inserting the cooling resistance 334 in series with the brake release coil. Separation of contacts 461 also breaks the short circuit around the coil O 468 permitting the operation of the accelerating relay O. The circuit for coil O 468 may be traced from terminal 381, by way of line 382 through contacts A 394, by way of line 460 through the brake release coil 330, resistance 331 and resistance 332 arranged in parallel relation, by way of line 474 through coil O 468, back to line 460, contacts H 457, by way of line 386 through contacts A 395, to terminal 387. The operation of relay O causes the engagement of contacts O 475 completing the circuit for the first accelerating switch actuating coil D 476 and the leveling switch motor relay actuating coil T 477. The purpose of this arrangement is to utilize the time constant of the brake for timing the acceleration of the motor, more specifically, for timing the operation of the first accelerating switch. Although the brake release coil is energized at the same time that power is supplied to the motor, the brake shoes do not lift at once because of the inherent time constant of the brake magnet and because the brake shoes and lever arms (not shown in Figure 1, the brake being represented by a coil, plunger, spring and single shoe) represent considerable mass to be set in motion. The circuit for coils D 476 and T 477 may be traced from terminal 381, by way of line 382 through contacts A 394, by way of line 478 through contacts O 475, coil D 476 and coil T 477, by way of line 480 through up "automatic" second slow-down switch 146, "director switch" contacts 36 and 40 bridged by segment 44, line 420, by way of line 421 through contacts I 422, door contacts 416, gate contacts 415 and contacts 344, line 402, switch 393, line 391, line 386, to terminal 387.

The energization of the first accelerating switch actuating coil D 476 causes the separation of contacts D 413 and the engagement of contacts D 481 and D 482. The separation of contacts D 413 breaks the circuit comprising the master control switch contacts 343 for shunting coil W 399 preventing operation of the gate opening mechanism by means of the master control switch. Contacts D 481 short-circuit resistance sections 320 and 321 in the generator separately excited field circuit increasing the generator E. M. F., caus-

ing an increase in the speed of the elevator motor. It is to be noted that the circuit completed by contacts D 481 also shunts resistance sections 317 and 318, previously referred to as shunted by contacts R 446. Contacts D 482 complete the circuit for the actuating coil E 483 of the second accelerating switch.

The energization of the leveling switch motor relay coil T 477 causes the engagement of contacts T 484. A circuit is completed for the leveling switch motor 335 by contacts T 484 and may be traced from terminal 381, by way of line 382 through contacts A 394, by way of line 485 through the leveling switch motor field 337 and armature 336 and contacts T 484, by way of line 386 through contacts A 395, to terminal 387. The leveling switch motor acts to move the leveling switch operating rollers so as to clear the leveling cams. The operation of the leveling switch and leveling switch motor will be set forth more in detail during the description of a stopping operation.

The circuit for coil E 483 may be traced from terminal 381, by way of line 382 through contacts A 394, by way of line 487 through contacts D 482, resistance 488, coil E 483 and reactance 490, by way of line 491 through up "automatic" first slow-down switch 145, "director switch" contacts 37 and 40 bridged by segment 44, line 420, by way of line 421 through contacts I 422, door contacts 416, gate contacts 415 and contacts 344, line 402, switch 393, line 391, line 386, to terminal 387. The switch E does not operate immediately the circuit for its actuating coil is completed, its action being delayed by the reactance 490. Upon operation, contacts E 492 engage, short-circuiting resistance section 322 in the generator separately excited field circuit. Thus the generator E. M. F. is further increased causing the motor to run at a faster speed. Also contacts E 493 engage completing the circuit for the actuating coil F 494 of the third accelerating switch. This circuit may be traced from terminal 381, by way of line 382 through contacts A 394, by way of line 495 through contacts E 493, resistance 496, coil F 494 and reactance 497, line 491, back to terminal 387 as traced for the coil E 483. As in the case of switch E, switch F is retarded in its operation by reactance 497. The reactances 490 and 497 thus provide a time element between the operation of the accelerating switches.

Switch F, upon operation, causes the separation of contacts F 385 and the engagement of contacts F 498. The separation of contacts F 385 breaks one of the parallel circuits shunting elevator motor field resistance 329, the resistance remaining short-circuited however by contacts Z 384. The purpose of contacts F 385 will be seen from later description. Contacts F 498 short-circuit resistance section 323 in the generator separately excited field circuit again increasing the generator E. M. F. and the speed of the elevator motor.

The actuating coil Z 502 of the speed control switch is connected across the armature 463 of the elevator motor, the switch operating when the generator E. M. F. has built up to substantially full value to cause the separation of contacts Z 384 and Z 450 and the engagement of contacts Z 503. The purpose of contacts Z 450 and Z 503 will be explained later. The separation of contacts Z 384 removes the short-circuit for resistance 329 in the elevator motor field circuit bringing the elevator motor up to full speed.

The starting of the elevator in the down direction is accomplished in a similar manner. When the car is traveling in the down direction, the "director switch" segment 44 bridges contacts 38, 32, 34 and 35. Thus, with the gate and doors closed, upon moving the master control switch to position II to start the car, a circuit is completed for the down non-interference relay actuating coil Q 504. This circuit may be traced from terminal 381, by way of line 382 through contacts A 394, by way of line 505 through coil Q 504, "director switch" contacts 32 and 38 bridged by segment 44, line 420, by way of line 421 through contacts I 422, door contacts 416, gate contacts 415, master control contacts 344, line 402, switch 393, line 391, line 386, to terminal 387. Switch Q operates causing the engagement of contacts Q 506 to complete a circuit for the pawl magnet coil 231 through master control contacts 346, already closed, and down limit switch 285, and the engagement of contacts Q 507 preparing a circuit for the down direction switch actuating coil C 508. The circuit for coil C 508 may be traced from terminal 381, by way of line 382 through contacts A 394, by way of line 436 through coil I 426 and coil H 425, by way of line 510 through coil C 508, contacts Q 506 and down "automatic" stop switch 152, "director switch" contacts 32 and 38 bridged by segment 44, line 420, line 421, back to terminal 387 as above traced. The down direction switch, upon operating, causes the separation of contacts C 511, corresponding to up direction switch contacts B 443, and the engagement of contacts C512, C 513 and C 514, corresponding to up direction switch contacts B 438, B 440 and B 441 respectively. The circuits for the accelerating switch actuating coils are prepared by the down "automatic" switches 150 and 151.

Assume that the car is running in the up direction and that it is desired to stop at an intermediate floor, for example, the third floor. At any time between the time the car reaches a point at its stopping distance from the second floor and the time the car reaches a point at its stopping distance from the third floor, the operator may release the master control switch permitting it to return to "neutral" position. Thus the bridges 348

and 347 move off contacts 346 and 344 respectively, it being noted that contacts H 456 remain closed to by-pass contacts 344. The circuit for the pawl magnet coil 231, however, is broken at contacts 346. As the automatic floor stop machine crosshead continues its movement, the up pawl 250 engages the up third floor stopping collar 251 causing the opening of the "automatic" switches 145, 146, 147 and 148 in the order named, as has previously been described in connection with Figures 9, 10 and 11. The opening of the up "automatic" first slow-down switch 145 breaks the circuit for coil F 494. The switch F drops out immediately due to the fact that its actuating coil discharges into a high resistance circuit comprising resistances 496, 488 and 515. Switch F, upon dropping out, causes the separation of contacts F 498 and the engagement of contacts F 385. The separation of contacts F 498 reinserts resistance sections 323 and 325 in series with the generator field 308 to decrease the E. M. F. of the generator, contacts Z 450 being separated as previously explained. The engagement of contacts F 385 short-circuits resistance 329 increasing the strength of the elevator motor field for the stopping operation. By providing contacts both on the speed control switch Z and on the third accelerating switch F for short-circuiting resistance 329, in the starting operation the strength of the elevator motor field is not decreased until the generator E. M. F. has built up substantially to full value while in the stopping operation the strength of the elevator motor field is increased immediately the stopping operation is initiated. The generator E. M. F. being lowered and the strength of the elevator motor field being increased, the speed of the elevator motor is lowered.

The opening of the up "automatic" switch 145 also breaks the circuit for coil E 483 of the second accelerating switch. This switch, however, does not open immediately, its action being delayed by the effect of the reactance 490 in series with its coil and the discharge resistance 515 in parallel with the reactance and its coil. Upon dropping out, switch E causes the separation of contacts E 493 in preparation for the next starting operation and of contacts E 492 reinserting resistance section 322 in the circuit of the generator field 308. Thus the generator E. M. F. is again lowered and the speed of the elevator motor reduced.

The opening of the up "automatic" second slow-down switch 146 deenergizes the coil D 476 of the first accelerating switch and the coil T 477 of the leveling switch motor relay. The switch D, upon dropping out, causes the separation of contacts D 481 and D 482 and the engagement of contacts D 413. The purpose of the engagement of contacts D 413 will be explained during the description of the automatic gate and door opening operation. The separation of contacts D 482 is in preparation for the next starting operation. The separation of contacts D 481 reinserts resistance section 320 in the circuit of the generator field 308 further decreasing the E. M. F. of the generator and therefore the speed of the elevator motor. The resistance section 321 is not reinserted in the generator field circuit at this time due to the fact that contacts Z 503 are closed, the actuating coil Z 502 of the speed control switch acting to maintain the switch operated at a lower voltage than that applied to cause the operation of the switch.

The leveling switch motor relay T, upon dropping out, causes the separation of contacts T 484 to deenergize the leveling switch motor 335. In this manner the operating rollers of the leveling switch are extended for engagement by the leveling cams. Referring briefly to Figure 1, the leveling switch motor is operatively connected to the leveling switch by means of an arm 516 on the motor shaft, a connecting link 517 and a lever 518. In the starting operation, the motor 335 being energized, arm 516 rotates acting through link 517 and lever 518 to move the leveling switch as a whole about a pivot. In this manner the leveling switch operating rollers 520 and 521 are moved into position where they do not engage the leveling cams 522 and 523 during motion of the car, a stop being provided to determine the extent of the movement. The leveling switch is pivoted on a bracket 524 secured to the car frame. In the stopping operation, upon the deenergization of the leveling switch motor, a spring (not shown) moves the lever 518 and therefore the leveling switch back into the first described position with the rollers 520 and 521 extended for engagement by the leveling cams. The leveling switch comprises up slow and fast speed pairs of contacts 525 and 526 respectively and down slow and fast speed pairs of contacts 527 and 528 respectively. Each pair of contacts comprises a stationary contact and a movable contact operated by engagement of its corresponding roller and leveling cam. The fast speed contacts are arranged to separate before the slow speed contacts in the leveling operation. Springs (not shown) are provided for causing the separation of the contacts of the pairs as the leveling operation is effected and stops are provided for determining the extent of movement of the rollers as they ride off the leveling cams. The opening of the up "automatic" second slow-down switch is so timed that the up leveling switch operating roller 520, upon the return movement, strikes against the vertical surface of the up leveling cam 522, causing the engagement of both the up slow and fast speed contacts 525 and 526.

Referring again to Figure 17, the up fast speed leveling contacts 526 complete the circuit for the fast speed leveling relay actuat-

ing coil LF 530. This circuit may be traced from terminal 381, by way of line 382 through contacts A 394, line 485, by way of line 531 through coil LF 530 and leveling contacts 526, by way of line 386 through contacts A 395, to terminal 387. The fast speed leveling relay, upon operation, separates contacts LF 532 to prevent the automatic opening of the gate and door at this time. The fast speed leveling relay also causes the engagement of contacts LF 533 completing an additional short-circuit for resistance section 317, sections 317 and 318 being short-circuited by contacts R 446. The up slow speed leveling contacts complete another circuit for the actuating coils H 425 and B 424 of the motor field switch and up direction switch respectively. This circuit may be traced from terminal 381, by way of line 382 through contacts A 394, by way of line 436 through coils I 426, H 425 and B 424, by way of line 534 through leveling contacts 525 and up slow speed leveling relay actuating coil LU 535, by way of line 386 through contacts A 395, to terminal 387. By breaking the circuit for the coil T 477 by means of the up "automatic" second slow-down switch 146, the engagement of the slow speed leveling contacts is effected before the up "automatic" stop switch 147 opens. Thus the up direction switch and motor field switch do not drop out when the "automatic" switch 147 opens, their actuating coils being maintained energized by leveling contacts 525 through the circuit above traced. By controlling the energization of coils H 425 and B 424 in this manner, a smooth stopping operation is assured. It is to be understood that the coil T 477 may be placed in series with either coil E 483 or coil F 494, if desired, in order to render certain the engagement of leveling contacts 525 and 527 before "automatic" switch 147 opens. It is to be noted that the up direction switch and motor field switch are maintained operated so long as leveling contacts 525 are closed, regardless of the condition of the up non-interference switch, "automatic" switches, "director switch", door contact sequence relay contacts I 422, door and gate contacts 416 and 415 and master control contacts 344. Thus the opening of up "automatic" switch 148 is without effect, except to break the circuit for coil I 435.

As was seen in the above description, the engagement of slow speed leveling contacts 525 completed a circuit for actuating coil LU 535 of the up slow speed leveling relay. This relay, upon operation, causes the engagement of contacts LU 536 completing the circuit for the up coil X 537 of the series field relay and the actuating coil R 538 of the slow-down switch. This circuit may be traced from terminal 381, by way of line 382 through contacts A 394, by way of line 540 through contacts LU 536, coil X 537 and a portion 541 of a reactance 542, by way of line 543 through coil R 538, line 544, by way of line 386 through contacts A 395, to terminal 387. The operation of relay X and switch R is delayed due to the fact that the circuit for their coils is through the portion 541 of reactance 542. The value of this reactance portion is chosen, however, so that the time element is very small. The switch R, upon operation, causes the separation of contacts R 446, inserting resistance section 318 in the circuit of generator field 308, the resistance section 317 remaining short-circuited by contacts LF 533. Thus the generator E. M. F. is lowered and the speed of the elevator motor is still further reduced. The switch R also causes the engagement of contacts R 545 preparing a circuit for causing the automatic opening of the gate and door. The relay X, upon operation, causes the engagement of contacts X 546, completing the circuit for the actuating coil Y 547 of the series field switch. This circuit may be traced from terminal 381, by way of line 382, through contacts A 394, by way of line 544 through contacts X 546 and coil Y 547, by way of line 386 through contacts A 395, to terminal 387. The switch Y, upon operation, causes the separation of contacts Y 465 breaking the short-circuit around a portion of the resistance 316 in parallel with the generator series field 311. The generator series field is so wound that, without the parallel resistance 316, it would have too great an effect for proper operation of the car. The desired compounding is obtained by employing the low resistance shunt. By increasing the amount of this shunting resistance when switch Y operates, the strength of the series field is increased for the leveling operation so as to aid in bringing the motor to a stop, as will be seen from later description. The short delay in the action of relay X, and therefore the switch Y, upon the initiation of the leveling operation, is desirable in order that the current in the generator armature, elevator motor armature circuit may adjust itself to such a value that proper series field strength during the leveling operation may be obtained.

As the car nears the third floor landing, roller 520 rides off the vertical surface on to the oblique surface of cam 522. This results in the opening of up fast speed leveling contacts 526 and the consequent deenergization of coil LF 530 of the fast speed leveling relay. This relay drops out separating contacts LF 533 to insert resistance section 317 in the circuit of the generator field 308. Thus the generator E. M. F. is again lowered and the motor runs at its slowest speed. The fast speed leveling relay, upon dropping out, also causes the reengagement of contacts LF 532 completing the circuit for effecting the automatic door and gate opening operation. This circuit shunts coil W 399 of the main-

taining relay causing the operation of the gate opening mechanism in the same manner as described for the operation of moving the master control switch to position III. In this manner the automatic gate and door opening operation is timed so that the gate and door open as the car stops at the landing. Contacts D 413 serve the additional purpose of preventing the automatic gate and door opening operation until the first accelerating switch has dropped out.

Shortly before the car reaches an exact level with the landing, the roller 520 rides off the oblique surface of cam 522 thereby separating the slow speed leveling contacts 525. The circuit for coils I 426, H 425, B 424 and LU 535 is thus broken. The deenergization of coil I 426 is in preparation for the next starting operation. Switch H drops out causing the separation of contacts H 456, H 457 and H 458 and the engagement of contacts H 453, H 454 and H 455. The separation of contacts H 456 is in preparation for the next starting operation, the contacts having maintained the circuit for the feed contact 40 of the "director switch" and the circuit for coil I 435 after the master control switch contacts were separated. The separation of contacts H 458 reinserts resistance 328 in series with the elevator motor field reducing the current therein to a "standing field" value. The separation of contacts H 457 breaks the circuit for the brake release coil 330 and coil O 468. The accelerating relay O drops out separating contacts O 475 in preparation for the next starting operation. The engagement of contacts H 454 reinserts the low resistance 333 in parallel with the brake release coil 330 to "soften" the application of the brake. The engagement of contacts H 455 is in preparation for the next starting operation. The engagement of contacts H 453 reconnects the generator field 308 to the generator. The polarity of this connection is such that the generator sends current through field 308 in such direction as to oppose the flux which produces the generator E. M. F., thus tending to destroy the residual flux of the generator field.

Up direction switch B, dropping out along with switch H, causes the separation of contacts B 438, B 440 and B 441 and the engagement of contacts B 443. The purpose of contacts B 441 and B 443 will be seen from later description. The separation of contacts B 438 and B 440 disconnects the generator field 308 from lines 382—386, the field being simultaneously connected to the generator armature by the engagement of contacts H 453 as explained above. Up slow speed leveling relay LU, dropping out along with switches B and H, causes the separation of contacts LU 536 deenergizing coil X 537 and coil R 538, the relay X and switch R dropping out in preparation for the next starting operation. It is to be noted that the circuit for coil Y 547 is broken by the separation of contacts X 546, the switch Y also dropping out in preparation for the next starting operation.

Thus, the brake being applied and the generator separately excited field disconnected from the exciter, the car is brought to rest level with the third floor landing. It is to be noted that, as the brake is applied, the brake contacts 461 reengage, the reengagement being in preparation for the next starting operation. A sudden change in the strength of the generator field as each section of resistance is inserted in the stopping operation is prevented by the action of the discharge resistance 314 across the field winding.

It is believed that the operation of stopping a descending car will be obvious in view of the above description. In the event of an overrun however, the operation of the switches is modified. Assuming in the above example that the car overruns the third floor to the extent of causing the engagement of down slow speed leveling contacts 527, a circuit is completed for the coils I 426, H 425 and C 508 and coil LD 550 of the down slow speed leveling relay. This circuit may be traced from terminal 381, by way of line 382 through contacts A 394, by way of line 436 through coils I 426 and H 425, by way of line 510 through coil C 508, by way of line 551 through leveling contacts 527 and coil LD 550, by way of line 386 through contacts A 395, to terminal 387. Since this circuit by-passes contacts I 422, the operation of relay I is without effect at this time. Switch C operates to cause the engagement of contacts C 512 and C 513 connecting the generator field 308 to lines 382—386 for reverse operation. Switch H operates simultaneously with switch C to cause the disconnection of the generator field 308 from the generator armature, the disconnection of the resistance 333 from across the brake release coil 330, the energization of the brake release coil, and the strengthening of the elevator motor field. The relay LD operates simultaneously with switches H and C to cause the engagement of contacts LD 552, completing a circuit for the down coil X 553 of the series field relay, and for coil R 538 of the slow-down switch. This circuit may be traced from terminal 381, by way of line 382 through contacts A 394, by way of line 554 through contacts LD 552, coil X 553 and portion 555 of reactance 542, by way of line 543 through coil R 538, line 544, to terminal 387 as previously traced. The brake being released and the generator field being energized, the elevator motor starts in the down direction to return the car to the floor. The relay X and switch R do not operate immediately. When contacts LU 536 closed upon approaching the floor, the current flowing through the reactance portion 541 caused a flux to be built

up in reactance 542 in one direction. Upon the separation of contacts LU 536, the current in the reactance discharged into resistance 556 tending to maintain this flux built up. Upon closing contacts LD 552 on an overrun, the current supplied to coils X 553 and R 538 must reverse the flux in the reactance, thus taking a longer time to build up to a value sufficient to cause the operation of relay X and switch R. Contacts R 446, therefore, remain closed long enough to permit sufficient current to be supplied to the generator field 308 to cause the motor to start the car in the down direction, contacts R 446 short-circuiting resistance sections 317 and 318. Contacts Y 465 also remain closed temporarily in order to insure that the current in the generator armature, elevator motor armature circuit has fallen to a low value, the operation of switch Y depending on the operation of relay X as previously explained. Since the current in the series field may be flowing in a direction such as to cause the generation of an E. M. F. which is of proper polarity for operating the car in the reverse direction, immediate increase of the strength of the series field might result in an overrun in the opposite direction. As the car returns to the floor, it is stopped by the separation of slow speed leveling contacts 527 in a manner similar to that described for approaching the floor.

If the overrun is great enough to cause the engagement of the down fast speed leveling contacts 528 as well as slow speed contacts 527, a circuit is completed for the fast speed leveling relay coil LF 530, as previously traced. As previously described, the operation of relay LF causes the engagement of contacts LF 533. When switch R operates to separate contacts R 446, therefore, the resistance section 317 remains short-circuited by contacts LF 533 causing the elevator motor to run at its fast leveling speed until contacts 528 separate. Further than this the operation on an overrun is as above described.

In order to obtain proper speed regulation for various load conditions, it is preferred to adjust the series field of the generator to give proper compounding for starting and stopping. The generator field resistance and elevator motor field resistance are then adjusted so that, upon engagement of contacts F 498 and separation of contacts F 385 and Z 384, the car runs at the desired speed for lowering a load, i. e., light load up or full load down. In order to obtain the desired speed when lifting a load, an additional step of resistance in the circuit of the generator field is short-circuited. The operation of cutting out the additional step of resistance may be effected by means of the load switch S. This switch is provided with a current coil S 467, previously referred to, and a voltage coil S 560 connected to the generator armature. These coils act cumulatively when the elevator motor is lifting a load and are adjusted to cause the operation of the switch at balanced load. Upon operation, contacts S 448 separate, for a purpose to be explained later, and contacts S 561 engage to short-circuit resistance section 326 bringing the elevator motor up to the desired speed.

During the starting operation, the steps of resistance in the field circuit are so proportioned as to suit the requirements of the particular installation both as regards the time for bringing the car up to speed and the smoothness of the starting operation. It has been found that the best results are obtained by making the first step of resistance large and successively decreasing the steps which follow.

During retardation, however, in order to cause the car to slow down in a desired time interval, which may be less than the time interval during starting, it has been found that the first step of resistance cut in the circuit of generator field 308 should be large as compared with the last step of resistance cut out during starting and that the last step of resistance cut in before the leveling operation should be correspondingly reduced so as to be small as compared with the first step of resistance cut out during starting. Such operation is obtained by means of the speed control switch Z.

As has already been explained, contacts Z 503 are separated and contacts Z 450 are in engagement during the starting operation. Thus the first step of resistance to be cut out comprises sections 320 and 321, the second step section 322, of less ohmic value, and the third step section 323, of still less ohmic value. In the stopping operation however, contacts Z 450 are separated and contacts Z 503 are in engagement so that the first step of resistance to be cut in comprises sections 323 and 325, the second step section 322, and the third step section 320, the switch Z holding in during retardation as previously set forth. The load switch S, by means of its contacts S 448, assists in bringing the car to an accurate stop under different conditions of load, as may better be seen from examples.

Assume that the car is traveling down with full load which means that the elevator motor armature is supplying current to the generator armature and therefore that the generator series field is opposing the separately excited field. The load switch S therefore is not operated, its contacts S 448 being in engagement and its contacts S 561 being separated. Thus, when contacts F 498 are separated, reinsertion of resistance sections 323 and 325 reduces the generator E. M. F. and therefore increases the regenerative braking action, slowing down the elevator motor. Similarly, reinsertion of resistance sections 322 and 320 by the separation of contacts

E 492 and D 481 increases the regenerative braking action, further reducing the speed of the motor. The values of resistance sections 325 and 320 may be adjusted so that the desired retardation is obtained. Assume now that the car is traveling down with light load which means that the generator is supplying current to the elevator motor and therefore that the generator series field is assisting the separately excited field. The load switch S, therefore, is operated and its contacts S 448 are separated. Thus when contacts F 498 are separated a larger step of resistance is reinserted in the circuit of generator field 308, the step comprising resistance section 324 as well as sections 323 and 325. In this manner the tendency of the series field to keep the generator E. M. F. above the counter E. M. F. of the elevator motor is overcome by a large reduction in the generator field strength so that regeneration is immediately effected. Immediately the motor starts to regenerate, the current in generator series field is reversed, the series field then acting to assist in the retardation. It will be obvious that several load switches may be employed and so calibrated as to operate at different values of positive load.

The operation of stopping the car at other intermediate floors is accomplished in the same manner as described above. The stop at the terminal landings, however, is accomplished automatically. As the car nears the top floor, for example, the roller 76 on the "director switch" operating arm strikes the hatchway cam 77, gradually moving the segment 44 off contacts 37, 36, 33 and 40 in the order named. The car is thus slowed down and stopped in a manner similar to that caused by the operation of the automatic floor stop machine, it being noted that contacts 37, 36 and 33 are connected to the "automatic" switches 145, 146 and 147, respectively. The contour of the hatchway cam is such that the "director switch" is moved into "neutral" position just before the tenth floor landing is reached. As the car is brought to a level with the landing, the up direction switch B drops out causing the reengagement of contacts B 443. As has previously been described, the reversing brush 265 is in engagement with the tenth floor reversing contact 295 with the car at the tenth floor and the switch 95 is closed with the "director switch" in up position. Thus the engagement of contacts B 443 completes a circuit for the "director switch" motor 117 which circuit may be traced from terminal 381, by way of line 382 through contacts A 394 by way of line 565 through contacts C 511 and B 443, line 566, brush 265, contact 295, by way of line 567 through switch 95 and down "director switch" motor series field 568, by way of line 570 through the "director switch" motor armature 571, by way of line 386 through contacts A 395, to terminal 387. The "director switch" motor operates in the previously described manner to move the "director switch" into down position. As the switch moves into down position it breaks the circuit for motor 117 by opening switch 95.

A stop at the terminal landings is assured by the operation of the automatic floor stop machine, the operation being effected regardless of the position of the master control switch. As the car approaches the tenth floor, the cam 290, carried by the crosshead, causes the opening of switch 284, breaking the circuit for the pawl magnet coil 231 if the operator has not returned the master control switch to neutral position. The "automatic" switches are then opened in the manner previously described insuring the stopping of the car should the "director switch" fail.

If the stop contact 294 is provided at the tenth floor, its engagement by up stop brush 266 insures the deenergization of the pawl magnet. Upon such engagement a circuit is completed for the up stop switch actuating coil US 573 which circuit may be traced from terminal 381, by way of line 382 through contacts A 394, line 574, by way of line 575 through contacts B 441 (these contacts being closed until the car stops), up stop brush 266, contact 294, line 576, line 577, by way of line 578 through coil US 573, by way of line 386 through contacts A 395, to terminal 387. The up stop switch, upon operation, causes the separation of contacts US 432 in the pawl magnet coil circuit and the engagement of contacts US 580 to complete a holding circuit for its actuating coil. As has previously been explained, the stop contacts are arranged to be engaged by the stop brushes with the car at such a distance from the landings that the engagement of the pawl and stopping collar is assured. After the brush 266 leaves contact 294, coil US 573 is maintained energized by contacts US 580, the holding circuit by-passing the brush and contact. The circuit for coil US 573 is not broken until contacts B 441 of the up direction switch separate.

In starting the car down from the tenth floor, the down non-interference contacts Q 507 are closed and the circuit for the pawl magnet is completed through these contacts and switch 285, contacts P 427 being separated and switch 284 open. A stop at the first floor is made in a similar manner and will not be described in detail. The "director switch" is moved to "neutral" position by the hatchway cam and then to reversed position by motor 117. The circuit for the armature 571 of the motor 117 during this operation is through brush 265, first floor reversing contact 583, switch 96 and up "director switch" motor series field 584. Switch 285 is opened and, if the stop contact 586 is provided for the first floor, contacts DS 433

are separated to insure the deenergization of the pawl magnet coil regardless of the position of the master control switch. The circuit for the down stop switch actuating coil DS 585 is completed by the engagement of down stop brush 267 and first floor stop contact 586 and is through contacts C 514. As in the case of the up stop switch, the down stop switch completes a maintaining circuit for its coil by the engagement of contacts DS 587. As has previously been stated, stop contacts 294 and 586 may be omitted if desired since they serve substantially the same purpose as switches 284 and 285. Obviously, switches 284 and 285 and their operating cam 290 may be omitted if it is preferred to employ the contacts 294 and 586.

The direction of car travel may be changed at any floor at the will of the operator by means of the "director switch" motor switch 588. This switch has two operative positions and when moved counter-clockwise from its central position (as viewed in Figure 17) causes the operation of the motor 117 to move the "director switch" from up into down position. If the "director switch" is already in down position, this operation is without effect as switch 95 is open. When this switch is moved clockwise, the operation of the motor 117 is effected in a similar manner to move the "director switch" into up position. After the "director switch" has been moved into reversed position, the car is started in the opposite direction by movement of the master control switch to position II.

If it is desired to operate between the second and ninth floors, the switches 591 and 592 are closed rendering the second and ninth floor stop contacts 593 and 292 "alive". Also, switches 596 and 597 are closed rendering the second and ninth floor reversing contacts 598 and 293 "alive". Thus as the car approaches the ninth floor, up stop brush 266 engages contact 292 completing a circuit through switch 592 for the actuating coil US 573 of the up stop switch. This switch operates, as above set forth, to separate contacts US 432 breaking the circuit for the pawl magnet coil 231 if the master control switch has not been returned to neutral position. The automatic floor stop machine then operates to bring the car to rest level with the ninth floor landing. It is to be noted that, in the stopping operation, contacts I 422 are separated prior to the separation of contacts B 441 in the circuit for coil US 573. Thus the master control switch must be returned to "neutral" position before the closure of contacts I 422 can be effected, preventing the immediate restarting of the car upon the separation of contacts B 441 and the consequent reengagement of contacts US 432. The circuit for the "director switch" motor 117 is completed, upon reengagement of contacts B 443, through brush 265 and ninth floor reversing contact 293. The "director switch" motor then operates to move the "director switch" from up into down position. Thus, upon movement of the master control switch to position II, the car starts in the down direction. It is believed that the operation of automatically stopping the car and reversing its direction of travel at the second floor will be obvious from the above description.

As was set forth in the description of the automatic floor stop machine, the system may be arranged so as to restrict the operation of the car to between any pair of landings. It was then stated that, in such event, stop and reversing contacts are provided on the automatic floor stop machine for each floor. Switches are then provided for rendering the contacts "alive", each switch having two operative positions instead of one as shown. Of the switches for rendering the stop contacts "alive", each switch is arranged for connection to either coil US 573 or DS 585. Of the switches for rendering the reversing contacts "alive", each switch is arranged for connection either to line 567 or line 600. Thus, for example, if it were desired to restrict the operation of the car to between the fifth and the seventh floors; the switch for rendering the seventh floor stop contact "alive" would be connected to coil US 573, the switch for rendering the seventh floor reversing contact "alive" to line 567, the switch for rendering the fifth floor stop contact "alive" to coil DS 585, and the switch for rendering the fifth floor reversing contact "alive" to line 600. If it were desired to change the scheme of operation so as to restrict the operation of the car to between the fifth floor and some lower floor, the switches for rendering the fifth floor stop and reversing contacts "alive" would then be connected to coil US 573 and line 567 respectively.

The car may be caused to stop regularly at each floor by opening the consecutive-stop switch 430, shown in Figure 1 as in the car. Thus, immediately upon operation of switch H in response to the closure of the "automatic" stop switches, contacts H 455 separate deenergizing the pawl magnet coil 231. Thus the pawls are immediately reextended into position for engaging the stopping collars and, upon continued movement of the car, the pawl corresponding to the direction of travel engages the stopping collar for the next floor causing the stopping of the car. In the event that a bank of elevator cars are in operation under the control of a dispatcher, an additional consecutive-stop switch for each car may be arranged for convenient operation by the dispatcher. Such a switch is indicated as consecutive-stop switch 431 in Figure 17. Thus should the dispatcher desire that the car make all stops he would

open switch 431 causing the car to stop at each successive floor.

In the event of an extreme emergency, such as a fire, when the gate and doors cannot be closed, operation may be had by closing emergency switch 595 to by-pass gate contacts 415, door contacts 416 and door contact sequence relay contacts I 422. Contacts I 422 are by-passed because under normal conditions, with the gate and door contacts open upon the closure of the "automatic" switches in the starting operation, the door contact sequence relay I operates to separate contacts I 422, preventing the starting of the car. With the emergency switch closed, both coils I 426 and I 435 are energized when the "automatic" switches close, permitting the starting of the car.

Safety switch 393 is provided for stopping the car in case of an emergency. The opening of this switch breaks the circuit for coil A 390, permitting the potential switch to drop out. Contacts A 394 and A 395 thus separate breaking the circuit for the separately excited field of the generator and the control circuits, contacts H 457 separating to deenergize the brake release coil 330. Contacts A 396 also separate disconnecting the parallel resistances 332 and 333 from across the brake release coil causing a "hard" application of the brake. It is to be noted that if the car is stopped at any point by opening the safety switch, its direction of travel may be reversed at that point by means of the "director switch" motor switch 588. Upon reclosing the safety switch, the car is then started in the opposite direction by the master control switch. The opening of any of the "safety switches" included in line 391 or of switch 354 or of contacts J 388 effects the stopping of the car in the same manner.

In case of a dangerous overload on the generator, the protective relay N, due to the fact that its coil N 466 is in the generator armature, motor armature circuit, operates to separate contacts N 361. The coil M 356 of the driving motor starting relay is thus deenergized causing the separation of contacts M 364. As a consequence the driving motor running switch is deenergized, the switch dropping out to cause the disconnection of the driving motor from the alternating current mains and to cause the short-circuiting of coil J 380 of the minimum current field relay. Contacts J 388 are thus separated causing the car to stop in the same manner as described for opening the safety switch 393. In a similar manner the car is brought to a stop and the driving motor is disconnected from the mains in the event of phase failure, coil L 365 being connected across mains 302—303, and coil M 356 across mains 303—304.

In accordance with the provisions of the patent statutes, the principle of operation of the invention, together with the apparatus now considered to represent the best embodiment thereof, have been described, but it is desired to have it understood that the apparatus shown is only illustrative, and that the invention can be carried out by other means.

What is claimed is:—

1. A control system for an elevator car comprising, car actuating and stopping mechanism, a switch for causing, upon its movement to one position, the operation of said mechanism to start the car and for causing, upon its movement to another position, the operation of said mechanism to stop the car, and means for determining the direction in which said mechanism will start the car in response to the movement of said switch to said one position.

2. A control system for an elevator car comprising, a switch having an operative and an off position, means responsive to the operation of said switch for starting the car when the switch is moved into said operative position and for stopping the car at a landing when the switch is moved into off position, and means for determining the direction in which the first named means will start the car in response to the movement of said switch into said operative position.

3. A control system for an elevator car comprising, a switch having an operative and an off position, means responsive to the operation of said switch for starting the car when the switch is moved into said operative position and for stopping the car at a landing when the switch is moved into off position, and means for causing the first named means to start the car in the same direction as that in which it last traveled in response to the movement of said switch into said operative position after a stop at an intermediate landing.

4. A control system for an elevator car comprising, car actuating and stopping mechanism, a switch operable in only one direction to cause the operation of said mechanism to start the car, said switch being adapted, when returned to off position, to cause the operation of said mechanism to stop the car.

5. A control system for an elevator car comprising, a switch for determining the direction of travel of the car, means for starting the car in a direction determined by said switch and for stopping the car at a landing, and a second switch operable to cause the operation of said means to start the car, said second named switch being adapted, when returned to off position, to cause the operation of said means to stop the car at a landing.

6. A control system for an elevator car comprising, car actuating and stopping mechanism, a switch for causing the operation of said mechanism both to start and stop the car, and means for determining the direc-

tion of travel of the car and for causing the operation of said mechanism to stop the car at certain floors.

7. A control system for an elevator car comprising, car actuating and stopping mechanism, means adapted to cause the operation of said mecahnism to stop the car at each of a plurality of landings, a switch having an operative and an off position, said switch being adapted, when moved into said operative position, to cause the operation of said mechanism to start the car and, when moved into its off position, to cause the operation of said means whereby the car is stopped at a landing, and means for causing the operation of said mechanism to stop the car at a terminal landing, regardless of the position of said switch.

8. A control system for an elevator car comprising, car actuating and stopping mechanism, means adapted to cause the operation of said mechanism to stop the car at each of a plurality of landings, a switch having an operative and an off position, said switch being adapted, when moved into said operative position, to cause the operation of said mechanism to start the car and, when moved into its off position, to cause the operation of said means whereby the car is stopped at a landing, and means for determining the direction in which said mechanism will start the car and for causing the operation of said mechanism to stop the car at a terminal landing, regardless of the position of said switch.

9. In an elevator system, an elevator car, means for causing the starting and stopping of the car, means for causing the car, when traveling in the up direction, to automatically stop at a selected one of a plurality of landings and for preventing the car going beyond such landing so that such landing becomes the upper terminal landing, and means for each of said plurality of landings for selecting such terminal landing.

10. In an elevator system, an elevator car, means for causing the starting and stopping of the car, means for causing the car, when traveling in the up direction, to automatically stop at a selected one of a plurality of landings and for preventing the car going beyond such landing so that such landing becomes the upper terminal landing, and a switch for each of said plurality of landings for selecting such terminal landing.

11. In an elevator system, an elevator car, means for causing the starting and stopping of the car, means for causing the car, when traveling in the up direction, to automatically stop at a selected one of a plurality of landings and for preventing the car going beyond such landing so that such landing becomes the upper terminal landing, means for each of said plurality of landings for selecting such upper terminal landing, means for causing the car, when traveling in the down direction, to automatically stop at a selected one of a plurality of landings and for preventing the car going beyond such landing so that such landing becomes the lower terminal landing, and means for each of said latter plurality of landings for selecting such lower terminal landing.

12. A control system for an elevator car comprising, a switch, means responsive to the operation of said switch for starting the car, means for determining the direction in which the first named means will start the car in response to the operation of said switch, and means for causing the operation of the second named means with the car at any one of a plurality of landings to change the direction in which the first named means will start the car in response to the operation of said switch.

13. A control system for an elevator car comprising, a switch, means responsive to the operation of said switch for starting the car, means for determining the direction in which the first named means will start the car in response to the operation of said switch, means for causing the operation of the second named means with the car at any one of a plurality of landings to change the direction in which the first named means will start the car in response to the operation of said switch, and means for selecting said any one landing.

14. A control system for an elevator car comprising, means for stopping the car at any one of a plurality of landings, means for reversing the direction of car travel, and means for automatically causing the operation of the first named means to stop the car at a selected landing and of the second named means to change its direction of travel.

15. A control system for an elevator car comprising, a switch, a second switch having two operative positions, means responsive to the operation of the first named switch for starting the car in a direction dependent on the position of the second named switch, and automatic means for moving the second named switch from one into the other operative position at any one of a plurality of intermediate landings.

16. A control system for an elevator car comprising, a switch, a second switch having two operative positions, means responsive to the operation of the first named switch for starting the car in a direction dependent on the position of the second named switch, and automatic means for moving the second named switch from one into the other operative position at any one of a plurality of landings and from the other operative position back into said one operative position at any one of a plurality of landings.

17. A control system for an elevator car comprising, means for starting the car and for stopping it at each of a plurality of landings, a switch having an operative and an off position, said switch being adapted, when

moved into said operative position, to cause the operation of the first named means to start the car and, when returned to its off position, to cause the operation of the first named means to stop the car at one of said landings, and means for automatically causing the operation of the first named means to stop the car at a selected intermediate landing.

18. A control system for an elevator car comprising, means for starting the car and for stopping it at each of a plurality of landings, a switch having an operative and an off position, said switch being adapted, when moved into said operative position, to cause the operation of the first named means to start the car and, when returned to its off position, to cause the operation of the first named means to stop the car at one of said landings, a second switch having two operative positions, the direction in which the first named means will start the car being dependent on the position of the second switch, means for automatically causing the operation of the first named means to stop the car at a selected landing, and means for moving the second switch from one operative position into the other at said selected landing.

19. A control system for an elevator car comprising, means for starting the car and for stopping it at each of a plurality of landings, a switch having an operative and an off position, said switch being adapted, when moved into said operative position, to cause the operation of the first named means to start the car and, when returned to its off position, to cause the operation of the first named means to stop the car at one of said landings, a second switch having two operative positions, the direction in which the first named means will start the car being dependent on the position of the second switch, means for automatically causing the operation of the first named means to stop the car at selected landings, and means for moving the second switch from one operative position into the other at one of the selected landings and from the other operative position into said one operative position at the other selected landing.

20. A control system for an elevator car comprising, means for starting the car and for stopping it at any one of a plurality of landings, a switch having an operative and an off position, said switch being adapted, when moved into said operative position, to cause the operation of the first named means to start the car and, when returned to its off position, to cause the operation of the first named means to stop the car at one of said landings, means for automatically causing the operation of the first named means to stop the car at a selected landing, and means for preventing the operation of the first named means to start the car after a stop at the selected landing until after the switch has been returned to off position.

21. A control system for an elevator car comprising, a switch, a second switch having two operative positions and an off position, means responsive to the operation of the first switch for starting the car in a direction dependent on the operative position of the second switch, means for moving the second switch from an operative to off position as the car approaches a terminal landing, and means for moving the second switch from off position into its other operative position at said landing.

22. A control system for an elevator car comprising, a switch, a second switch having two operative positions and an off position, means responsive to the operation of the first switch for starting the car in a direction dependent on the operative position of the second switch, means for moving the second switch from an operative to off position as the car approaches a terminal landing, and means for moving the second switch from off position into its other operative position at said landing, said last named means being adapted to move the second switch from one operative position into the other at a selected intermediate landing.

23. A control system for an elevator car comprising, means for starting and stopping the car, a switch having an operative and an off position, said switch being adapted, when moved into said operative position, to cause the operation of the first named means to start the car and, when returned to its off position, to cause the operation of the first named means to stop the car, a second switch having two operative positions and an off position, said second switch being adapted, when in one operative position, to cause the first named means to start the car in one direction when the first switch is moved into said operative position and, when in the other operative position, to cause the first named means to start the car in the other direction when the first switch is moved into said operative position, said second switch being adapted also to cause the operation of the first named means to stop the car when moved into off position, and means for moving the second switch from an operative into off position as the car approaches a terminal landing.

24. A control system for an elevator car comprising, means for starting and stopping the car, a switch having an operative and an off position, said switch being adapted, when moved into said operative position, to cause the operation of the first named means to start the car and, when returned to its off position, to cause the operation of the first named means to stop the car, a second switch having two operative positions and an off

position, said second switch being adapted, when in one operative position, to cause the first named means to start the car in one direction when the first switch is moved into said operative position and, when in the other operative position, to cause the first named means to start the car in the other direction when the first switch is moved into said operative position, said second switch being adapted also to cause the operation of the first named means to stop the car when moved into off position, means for moving the second switch from an operative into off position as the car approaches a terminal landing, and means for moving said second switch from off position into its other operative position at said terminal landing.

25. A control system for an elevator car comprising, a switch, a second switch having two operative positions, means responsive to the operation of the first switch for starting the car in a direction determined by the position of the second switch, and means for moving said second switch from one operative position into the other, said last included means comprising electromagnetic means.

26. A control system for an elevator car comprising, a switch, a second switch having two operative positions, means responsive to the operation of the first switch for starting the car in a direction determined by the position of the second switch, and means for moving said second switch from one operative position into the other, said last included means comprising electromagnetic means and resilient means for connecting said electromagnetic means and the second switch.

27. A control system for an elevator car comprising, a switch, a second switch having two operative positions and an off position, means responsive to the operation of the first switch for starting the car in a direction determined by the operative position of the second switch, means for moving the second switch from an operative to off position as the car approaches a terminal landing, and electromagnetically operated means for moving the second switch from off position into its other operative position at said landing and for moving the second switch from one operative position into the other at another landing.

28. A control system for an elevator car comprising, a switch, a second switch having two operative positions and an off position, means responsive to the operation of the first switch for starting the car in a direction determined by the operative position of the second switch, means for moving the second switch from an operative to off position as the car approaches a terminal landing, and electromagnetically operated means for moving the second switch from off position into its other operative position at said landing and for moving the second switch from one operative position into the other at another landing, said electromagnetically operated means comprising resilient operating means connected to said switch.

29. A control system for an elevator car comprising, a switch, a second switch having two operative positions and an off position, means responsive to the operation of the first switch for starting the car in a direction determined by the operative position of the second switch, an operating arm for said second switch, a roller on said arm, a hatchway cam for engaging said roller to move said second switch to off position as the car approaches a terminal landing, and means for moving said second switch from off position into its other operative position at the terminal landing and for moving said second switch from one operative position into the other at another landing, said last included means comprising a motor and connecting means between the motor and the operating arm constructed and arranged to prevent the transmission to the motor of the shock caused by the engagement of said roller and hatchway cam.

30. A control system for an elevator car comprising, car actuating and stopping mechanism, a start control common to a plurality of landings for causing the operation of said mechanism to start the car from each of said landings, and means for causing the operation of said mechanism to stop the car at the next adjacent of said landings after each start.

31. A control system for an elevator car comprising, means for starting the car and for stopping it at each of a plurality of landings, means for causing the operation of said means to start the car after each stop, and means common to all of said landings for causing the operation of the first named means to stop the car at each successive landing.

32. A control system for an elevator car comprising, means for starting the car and for stopping it at each of a plurality of landings, a switch for causing the operation of said means to start the car after each stop, and means common to all of said landings for causing the operation of the first named means to stop the car at each successive landing.

33. A control system for an elevator car comprising, means for starting the car and for stopping it at each of a plurality of landings, a switch for causing the operation of said means to start the car after each stop, and a second switch for causing the operation of said means to stop the car at each successive landing.

34. A control system for an elevator car comprising, means for starting the car and for stopping it at each of a plurality of landings, a switch for causing the operation of said means to start the car after each stop, a second switch for causing the operation of

said means to stop the car at each successive landing, and means for rendering said second switch ineffective.

35. A control system for an elevator car comprising, a start control, car actuating and stopping mechanism responsive to the operation of said start control to start the car after each stop, and means for causing the operation of said mechanism to stop the car at the next adjacent landing after each start.

36. A control system for an elevator car comprising, a start control, car actuating and stopping mechanism responsive to the operation of said start control to start the car after each stop, and means responsive to said start control in causing the starting of the car for causing the operation of said mechanism to stop the car at the next adjacent landing.

37. A control system for an elevator car comprising, a switch, means responsive to the operation of said switch for causing the starting of the car from each of a plurality of landings, and means for preventing the car from passing the next adjacent of said landings without stopping at said landing.

38. A control system for an elevator car comprising, means for starting the car and for stopping it at each of a plurality of landings, a switch for causing the operation of said means to start the car, and means, responsive to the operation of said switch in causing the starting of the car, for causing the first named means to stop the car at the next landing.

39. A control system for an elevator car comprising, means for starting the car and for stopping it at each of a plurality of landings, a switch for causing the operation of said means to start the car, and a second switch, responsive to the operation of the first switch in causing the starting of the car, for causing the first named means to stop the car at the next landing.

40. A control system for an elevator car comprising, means for starting the car and for stopping it at each of a plurality of landings, a switch for causing the operation of said means to start the car, a second switch, responsive to the operation of the first switch in causing the starting of the car, for causing the first named means to stop the car at the next landing, and means for rendering said second switch ineffective.

41. A control system for an elevator car comprising, means for starting and stopping the car, a switch having an operative and an off position, said switch being adapted, when moved into said operative position, to cause the operation of the first named means to start the car, means responsive to said switch in said operative position for causing the first named means to stop the car at the next landing, and means for rendering the second included means ineffective, said switch being adapted, when moved into its off position with the second included means ineffective, to cause the operation of the first named means to stop the car at a selected landing.

In testimony whereof, we have signed our names to this specification.

DAVID L. LINDQUIST.
EDWARD L. DUNN.
DAVID C. LARSON.