A. LEWIS.

TICKET PUNCH.

APPLICATION FILED DEC. 19, 1911.

1,068,510.

Patented July 29, 1913.

2 SHEETS—SHEET 1.

Fig. 1.

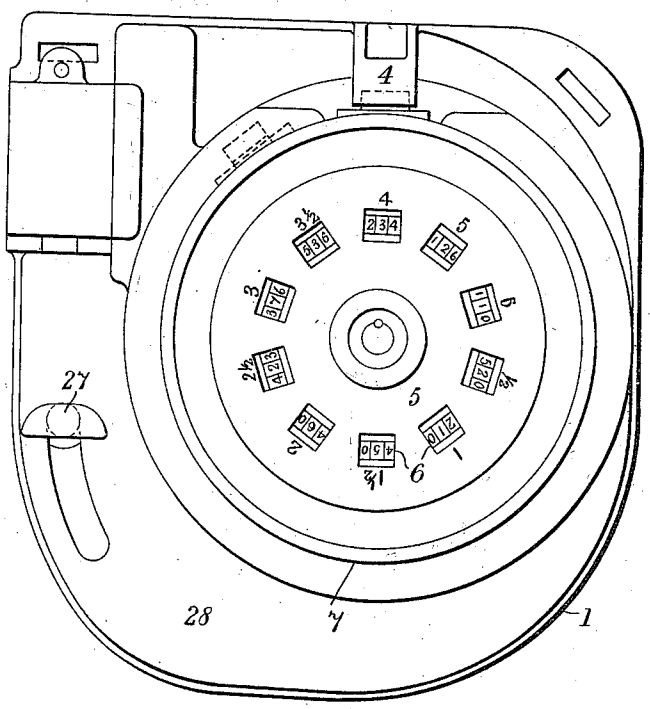

Fig. 2.

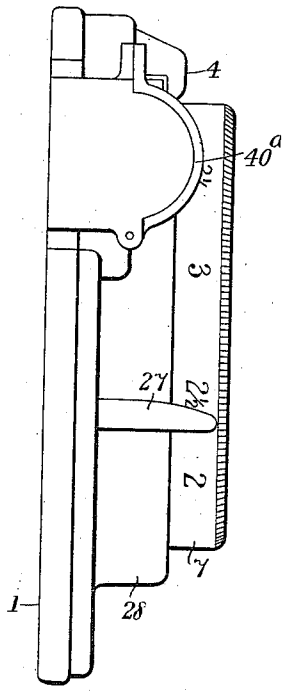

Fig. 3.

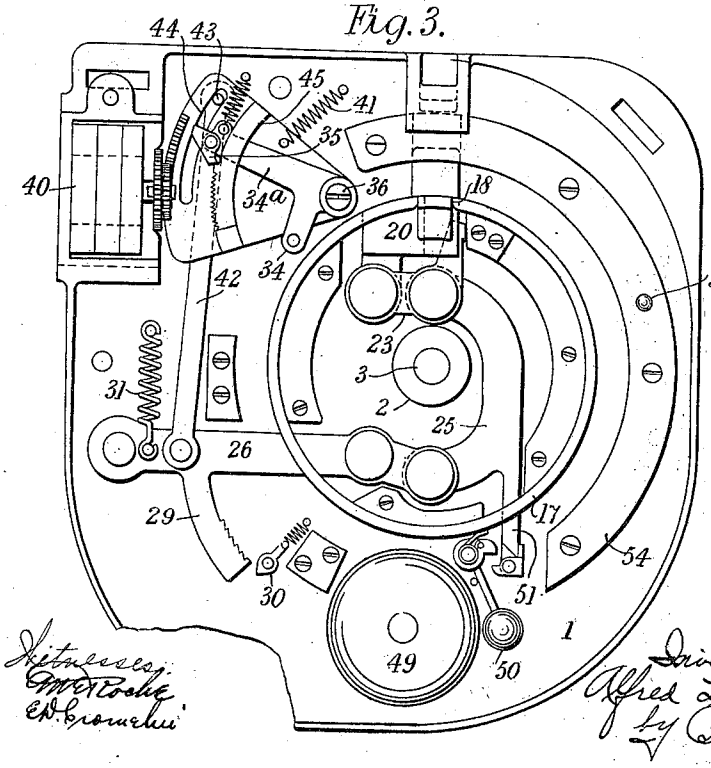

Fig. 4.

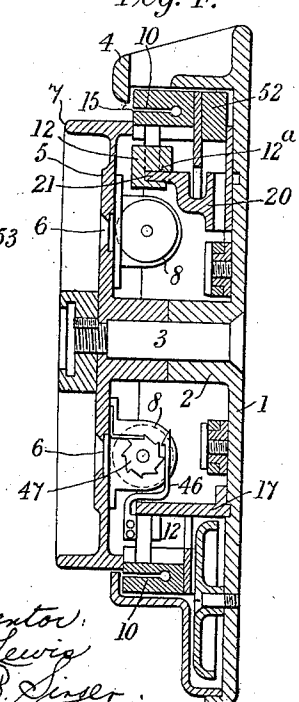

Witnesses:
M. E. Roche
E. D. Cromelin

Inventor:
Alfred Lewis
by B. Singer
Atty.

COLUMBIA PLANOGRAPH CO., WASHINGTON, D. C.

A. LEWIS.

TICKET PUNCH.

APPLICATION FILED DEC. 19, 1911.

1,068,510.

Patented July 29, 1913.

2 SHEETS—SHEET 2.

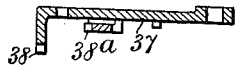

Fig. 5a

Fig. 5.

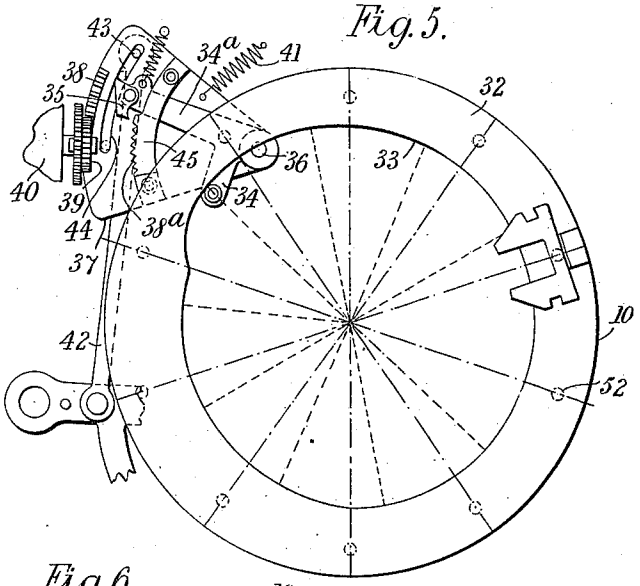

Fig. 6.

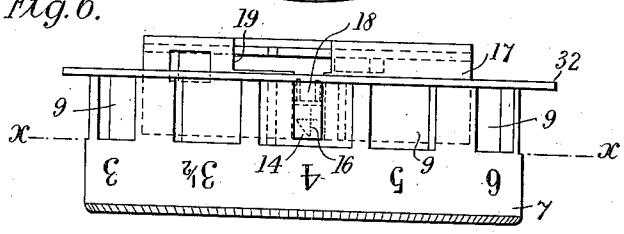

Fig. 7.

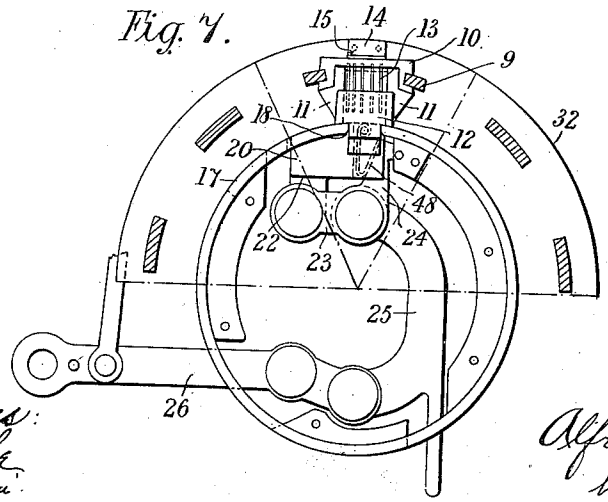

Witnesses:
E. M. Roche
E. D. Cromelin

Inventor:
Alfred Lewis
by B. Singer
Atty

COLUMBIA PLANOGRAPH CO., WASHINGTON, D. C.

UNITED STATES PATENT OFFICE.

ALFRED LEWIS, OF DALSTON, LONDON, ENGLAND.

TICKET-PUNCH.

1,068,510. Specification of Letters Patent. Patented July 29, 1913.

Application filed December 19, 1911. Serial No. 666,751.

To all whom it may concern:

Be it known that I, ALFRED LEWIS, a subject of the King of Great Britain, residing at 40 Gayhurst road, Dalston, in the county of London, England, omnibus inspector, have invented a new and useful Improvement in Ticket-Punches, of which the following is a specification.

This invention relates to a ticket punch of that class in which a series of punches is mounted upon a disk which is rotated to bring the desired punch into a position to punch the ticket; and my invention consists in an improved construction of punch whereby the punches are not only capable of being moved collectively in a circular path, but as each punch is brought into the punching position it is independently moved in a radial direction to punch the ticket.

According to this invention, a series of punches, corresponding to the number of differently priced tickets to be issued, are mounted upon a rotatable disk and the desired punch is brought opposite to a slide which is then actuated in a radial direction to perforate the ticket. The punches may each consist of a number of needles mounted in a base plate and arranged in the form of a numeral, or a cutter in the shape of a numeral may be employed instead of needles. These punches are disposed radially and work in guides mounted in a rim which extends laterally from the said disk; the outer end of each guide being formed with a head having a longitudinal perforation corresponding to the numeral formed by the needles or cutter and a transverse slot for the reception of the ticket. The heads of the guides are inclosed by a cover plate which is secured to a base plate whereon the rotatable disk is pivoted; the cover plate surrounding the rim of said disk but leaving an opening opposite the punching point to permit of a ticket being introduced into the head of the punch.

A ticket punch embodying my invention is illustrated in the accompanying drawings, in which:

Figure 1 is a front elevation of the apparatus, Fig. 2 a side elevation corresponding with Fig. 1, Fig. 3 a view showing the internal mechanism of the apparatus, and Fig. 4 a vertical section of the apparatus; Fig. 5 is a front elevation of means for operating a device which totals the cash received for tickets sold, Fig. 5ª is a view in section of the sector shown in Fig. 5. Fig. 6 is a plan of the rim of the disk wherein the punches are mounted, and Fig. 7 is a section on the line *x*—*x* in Fig. 6 and showing the means for adjusting the punches and operating same.

In the embodiment illustrated, I employ a base plate 1, formed with a bearing 2 for the reception of a pivot pin 3 and with a nose or projection 4 beneath which the tickets are passed to be punched. Upon the pivot pin 3 is mounted a disk 5 formed with a series of apertures 6 and with a rim 7. The apertures 6 correspond in number to the different fares, and upon the inner face of the disk are mounted a series of counters 8; there being one counter for each fare and the several counters being mounted opposite the apertures, so that the number of tickets issued may be seen. The inner portion of the rim 7 is formed with recesses 9 (see Fig. 6) which also correspond in number to the different fares, and in each recess is mounted a die 10 attached to a ring 32 and formed with guides 11, 11, between which is mounted a punch 12 provided with needles 13 arranged in the form of a numeral. Each die 10 is formed with a head 14 having a slot 15 for the reception of a ticket and perforations 16 corresponding to the needles of the punch pertaining thereto. The punches 12 are formed with curved slots 12ª which engage with a ring 17 which is attached to the base plate 1 and which is formed with an opening 18 disposed opposite to the nose 4. This opening terminates in a recess 19, Fig. 6, wherein works a slider 20 formed with a lateral projection 21 which completes the ring and which receives each punch as it is moved into the punching position. To a lug 22 formed on the said slider is pivoted a link 23 which is formed with an arm 24 for a purpose hereinafter described and which is pivoted to the one end of a connecting bar 25 the opposite end of which is pivoted to the one arm of a lever 26 pivoted to the base plate 1. The other arm of the lever 26 is provided with a thumb piece 27 which projects through a cover plate 28, and this arm is also formed with a toothed sector 29 adapted when the lever is depressed to engage a pawl 30. When the pawl and the lever are so engaged the lever cannot be returned to its normal position without first completing the down stroke; the return stroke of the lever being

effected by a spring 31. The lever 26 serves to operate the punches when the latter are in the punching position and also to operate means for totaling the cash received for tickets sold. For this purpose the ring 32, which is rotatable with several dies 10, mounted radially thereon, is shaped as to its inner periphery in the form of a cam 33 the face of which is of varying radii at each die 10; these radii being shown in broken lines, in Fig. 5, and it will be seen that the radius gradually diminishes from the first to the last taken clockwise. This cam engages with one arm 34 of a lever of which the other arm 34ª is provided with a pawl 35 controlled by a spring (not shown). This lever is pivoted at 36 to the base plate 1, and upon the same pivot is a sector 37 provided at its outer edge with teeth 38 while a second series of teeth 36ª is arranged contiguously to the path of the pawl 35. The teeth 38 engage with a spur wheel 39, which operates an adding device 40. The sector 37 is moved in the one direction by means of a spring 41 and in the opposite direction by means of a rod 42, one end of which is attached to the lever 26 while its opposite end is provided with a pin 43 which works in a slot 44 in the said sector. The pawl-lever works in a guide 45 and is adjusted by means of the cam 33 which raises or lowers the pawl 35 when the ring 32 is rotated in the one or the other direction to bring the desired die into the punching position. The die having been brought into this position the pawl 35 occupies a position opposite one of the teeth 38ª, and upon depressing the lever 26 to punch a ticket the rod 42 moves down therewith, whereupon the pin 43 engages with the pawl 35, with the effect that the latter engages the teeth 38ª and causes the sector 37 to follow the movement of the lever 26. It will thus be seen that the angular movement of the sector 37 is varied according to the fare and that the spur wheel 39 of the adding device is rotated a corresponding amount. While the adding device totals the amount received for the tickets collectively, the number of individual tickets sold is registered by the counters 8. To operate the counters each punch 12 is provided with a pawl 46 which, when the punch is operated, actuates a ratchet wheel 47 mounted upon the spindle of the counter pertaining thereto.

A punch 12 can only be operated when a ticket is inserted in the head of the die 10 pertaining thereto. This is due to the method hereinbefore described of mounting the punch operating slide 20 upon the connecting bar 25. In the event of there not being a ticket in the head of the die and of the lever 26 being actuated, the arm 24 of the link 23 together with the slide 20 are raised by the connecting bar 25, but this upward movement is limited by the arm 24 abutting against the ring 17. On the other hand, when a ticket is inserted in the die, the resistance afforded by the ticket to the needles retards the movement of the slide 20, with the effect that the arm 24 rotates about its pivot toward the slide and permits the passage of the latter through its opening in the ring 17. A spring 48 is interposed between the arm 24 and the slide 20 to return the former to its normal position.

The usual bell 49 is provided and same is sounded by means of a hammer 50 actuated by an arm 51 on the bar 25.

In order to insure that the desired punch is opposite the opening in the ring 17 and in the punching position, the ring 32 is formed on its inner face with a series of notches 52 which are so disposed that when a punch is opposite the said opening a notch engages with a ball 53 supported upon a spring housed in a bearer ring 54. Any other suitable device may, however, be employed for indicating when a punch is in the position to be operated. For indicating to the operator the position of the several punches the ring 7 is numbered opposite each recess to correspond with the amount of the fare and the numeral of the punch. The working of my improved punch is as follows:—Assuming that a ticket is to be issued for fourpence, the ring 7 is rotated until the numeral 4 thereon is opposite the nose 4. In this manner the punch and the die having the numeral 4 are brought into the punching position where they are held by the ball 51 engaging one of the notches in the ring 32. The rotation of the ring 7 also causes the ring 32 to rotate; the cam 33 on the latter thus bringing the pawl 35 into position opposite one of the teeth 38ª toward the upper end of the guide 45. The ticket to be punched is now inserted in the head of the die and the lever 26 depressed; whereupon the ticket is punched with the numeral 4, the counter pertaining to this numeral is operated by the upward movement of the pawl 46, mounted upon the punch rotating the ratchet wheel 47 of the counter, and the totalizer 40 is operated, in the manner hereinbefore described, to add the amount of the fare to that previously registered. The totalizer 40 is by preference covered with a cap 40ª so that the operator cannot see the total amount of the money received; but the counters indicating the number of tickets sold is visible through the apertures in front of same.

The apparatus above described and illustrated in the accompanying drawings is, by way of example, one mode of carrying out my invention, and it will be obvious that the construction is susceptible of various modifications. It will also be obvious that instead of employing loose tickets, a strip of paper

may be employed and fed to the punch to be perforated and then issued as a ticket.

What I claim as my invention and desire to secure by Letters Patent, is:—

1. A ticket punch comprising a series of punches in the form of numerals, a guide ring supporting said punches, a series of dies corresponding with said punches and formed to receive a ticket, a casing having an opening through which said ticket is passed, means for moving said punches and dies collectively in a circular path, and means for actuating each punch independently when its die is opposite said opening.

2. A ticket punch comprising a series of punches in the form of numerals, a series of dies corresponding with said punches and formed to receive a ticket, a casing having an opening through which said ticket is passed, a guide ring supporting said punches, a slide mounted in said guide ring to receive each punch as it is brought into the punching position, means for moving said dies and punches collectively in a circular path to be received successively on said slide, and means for actuating said slide to punch a ticket.

3. A ticket punch comprising a series of punches in the form of numerals, a series of dies corresponding with said punches and formed to receive a ticket, a casing having an opening through which said ticket is passed, a guide ring supporting said punches, a slide mounted in said guide ring to receive each punch as it is brought into the punching position, a pivotally mounted stop provided on said slide and rocked by the resistance afforded by the ticket to the punch to free said slide, means for moving said dies and punches collectively in a circular path, to be received successively on said slide, and means for actuating said slide to punch a ticket.

In witness whereof I have hereunto set my hand in the presence of two witnesses.

ALFRED LEWIS.

Witnesses:
E. L. H. ELLIOTT,
J. O'FARRER.

Copies of this patent may be obtained for five cents each, by addressing the "Commissioner of Patents, Washington, D. C."