Jan. 22, 1957 R. F. CHRISTENSEN 2,778,195

REFRIGERANT LIQUID RETURN MEANS

Filed Oct. 20, 1953

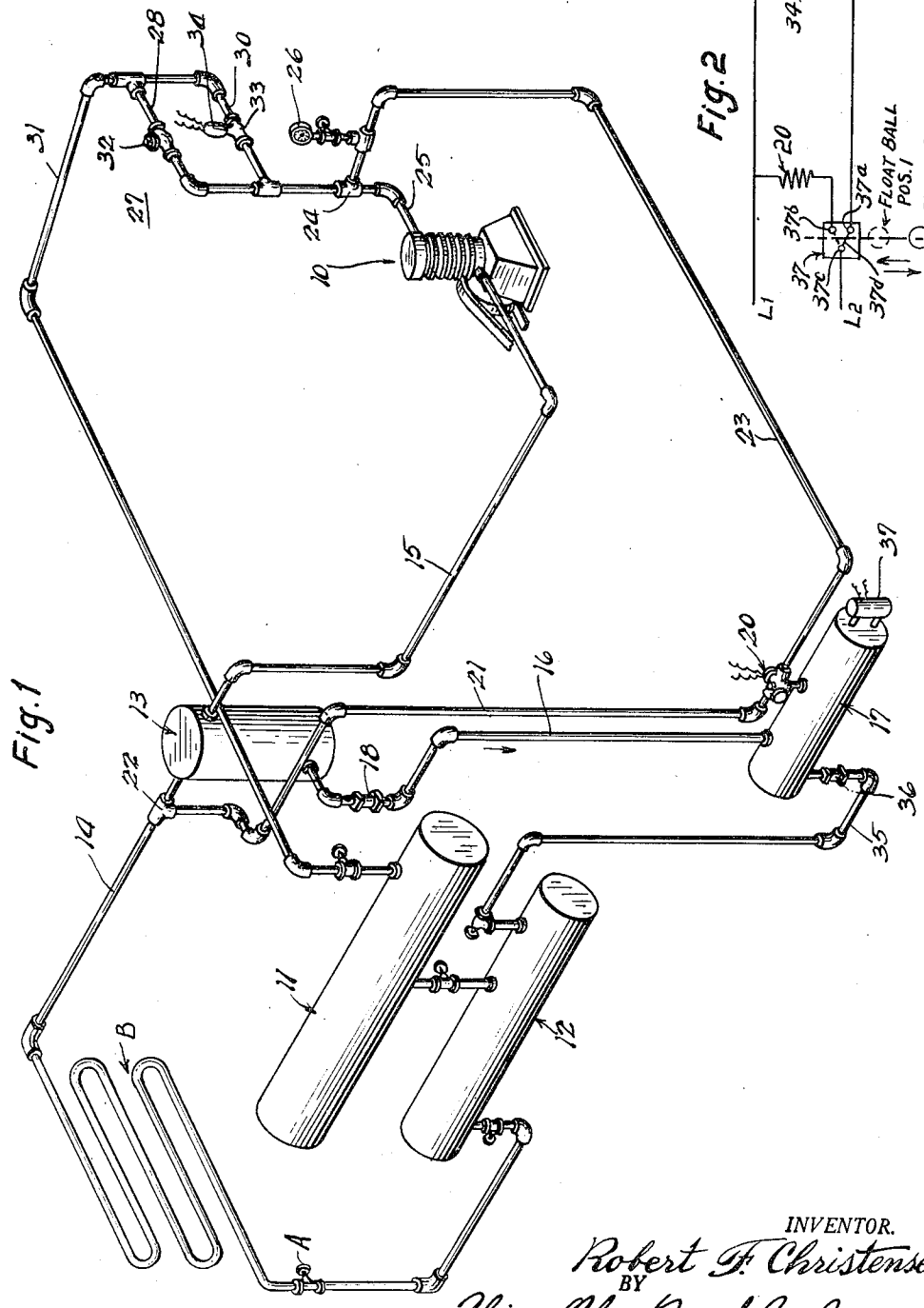

INVENTOR.
Robert F. Christensen
BY
Thiess, Olsen, Mecklenburger
& Habt & Coltman.

United States Patent Office 2,778,195 Patented Jan. 22, 1957

2,778,195

REFRIGERANT LIQUID RETURN MEANS

Robert F. Christensen, Crystal Lake, Ill., assignor to The Creamery Package Mfg. Company, Chicago, Ill., a corporation of Illinois

Application October 20, 1953, Serial No. 387,095

5 Claims. (Cl. 62—3)

This invention relates to refrigerating systems and more particularly to an economical means of preventing the return flow of the liquid or unevaporated refrigerant to the compressor, which sometimes occurs in such systems.

In commercial plants such as dairies, for example, the refrigerating system, used to cool milk products during the processing thereof, is often subjected to peak loads varying over a wide range of time and temperature. The various devices used in the refrigeration system to regulate the flow of liquid refrigerant to the evaporators frequently do not adjust themselves properly to large load variations, and as a result some of the liquid refrigerant is carried over from the evaporators into the suction line. If the flow of this liquid refrigerant to the suction side of the compressor is not checked, severe wear and damage to the compressor may result.

Various means for diverting the flow of this liquid refrigerant from the compressor to the liquid side of the system have heretofore been proposed, but, because of certain shortcomings associated with them, they have met with varying degrees of success. For example, many of these proposed means require expensive rearrangement of existing equipment, or are complex and of costly construction.

Thus it is one of the objects of this invention to provide an improved refrigerant liquid return means wherein the individual units utilized can be adapted to an existing refrigeration system with a minimum disruption of existing lines and equipment.

It is a further object of this invention to provide improved refrigerant liquid return means which is effective in operation, simple and inexpensive in construction and is adapted for use in refrigerating systems varying widely in size and capacity.

Further and additional objects will appear from the description, accompanying drawings, and appended claims.

In accordance with one embodiment of this invention, return means for unevaporated refrigerant is provided for use in a refrigerating system wherein the latter includes a compressor, an evaporator, an accumulator communicating with the evaporator and with the suction side of the compressor and whose function is to permit only evaporated refrigerant to pass into the suction side of the compressor, a condenser communicating with the discharge side of the compressor, a receiver communicating with the outlet side of the condenser, and a trap for collecting a predetermined amount of unevaporated refrigerant which has been diverted from the suction side of the compressor by the accumulator. The trap communicates with said accumulator and said receiver. The return means used in conjunction with the refrigerating system, comprises a pressure differential unit which communicates with the high pressure side of the compressor and is disposed intermediate the compressor and condenser. The pressure differential unit includes a first conduit communicating with the discharge side of the compressor, a second conduit communicating with said first

conduit and the condenser, and a third conduit communicating with said first conduit and the trap. The second conduit is provided with an automatically adjustable control, whereby, when in one position of adjustment, a portion of the evaporated refrigerant flowing under high pressure from the compressor to the condenser is diverted so as to flow through said third conduit into the trap and cause the unevaporated refrigerant collected therein to be discharged into the receiver. A second control is mounted on the trap and is adapted to actuate the adjustable control on said second conduit. The second control is regulated by the level of the unevaporated refrigerant collected in the trap.

For a more complete understanding of this invention, reference should be made to the drawing in which: Fig. 1 is a fragmentary perspective view of a refrigerating system incorporating the improved return means for the unevaporated refrigerant which accumulates in the suction side of the system; and Fig. 2 is a wiring diagram of a control circuit for the system.

Referring now to the drawing, a refrigerating system is shown which is of a type commonly used in commercial establishments such as dairies and the like. The refrigerating system, in this instance, utilizes anhydrous ammonia as the refrigerant and includes a compressor **10**, a condenser **11**, a receiver **12**, an expansion valve A, an evaporator B, and an accumulator **13** which is connected to the discharge side of the evaporator by conduit **14** and is connected to the suction side of the compressor **10** by conduit **15**. The accumulator is adapted to separate the unevaporated refrigerant from the evaporated refrigerant being discharged from the evaporator and before being introduced into the suction side of the compressor **10**. In a refrigerating system such as that shown, when used in a dairy, for example, the load on the refrigerating system varies widely over a 24-hour period, however, the various devices in the system used to regulate the flow of liquid refrigerant to the evaporators frequently fail to properly regulate the flow during periods of wide load variation. By reason of this fact, during the off-peak load periods, when only a relatively small amount of the refrigerant is evaporated in the evaporator B, any surplus liquid therein creates what is normally termed a "slop-over condition." When this condition occurs, a considerable amount of refrigerant leaving the evaporator B is still in liquid form. It is of utmost importance that the liquid refrigerant be separated from the evaporated refrigerant so that the liquid refrigerant can by-pass the compressor. Permitting liquid refrigerant to be introduced into the suction side of the compressor **10** would cause undue wear and damage to the compressor. The accumulator **13**, in this instance, is connected, as heretofore mentioned, into the suction line (conduit **14**) between the discharge side of the evaporator B and suction side of the compressor so that both the evaporated and unevaporated refrigerant are introduced into the upper side of the accumulator. The heavier liquid refrigerant is caused, by gravitational force, to separate from the evaporated or gaseous refrigerant and to collect in the bottom portion of the accumulator. The gaseous refrigerant, after being separated from the liquid refrigerant, leaves the upper end of the accumulator through conduit **15** and then flows on to the suction side of the compressor **10**.

Disposed beneath accumulator **13** is a trap **17** which is connected thereto by means of a conduit **16**. The conduit **16** communicates with the lower end portion of the accumulator and the upper side of the trap, and provides for the drainage by gravity of the separated liquid from the accumulator **13** into the trap **17**. Disposed within conduit **16** is a check valve **18**, the function of which will be discussed more fully hereinafter. Spaced from

the point of connection of conduit 16 with trap 17 is a remotely operated three-way valve 20. One port of valve 20 communicates with the upper side of trap 17. A second port of valve 20 is connected by means of conduit 21 to a T-connection 22, the latter being disposed in conduit 14 between the evaporator and the accumulator 13. The third port of valve 20 is connected by means of conduit 23 to a T-connection 24, the latter communicating with the discharge or high pressure side of the compressor 10. A pressure gauge 26 is positioned between valve 20 and T-connection 24.

When valve 20 is in one position of adjustment, the liquid refrigerant, which has accumulated in the lower portion of the accumulator 13, is caused to flow out of the accumulator 13 through conduit 16 into trap 17. To permit ready flow by gravity of the liquid refrigerant from accumulator 13 to trap 17, the latter is vented through valve 20 and the conduit 21 to the conduit 14, as seen in the drawing. What occurs after accumulator 13 has been drained and trap 17 has been filled with liquid refrigerant will be discussed more fully hereinafter.

Communicating with the high pressure side of compressor 10 and disposed between compressor 10 and condenser 11 is a pressure differential control unit 27. Control unit 27 preferably comprises a pair of conduit sections or branches 28 and 30 which are connected in parallel relation with respect to conduit 25, leading from compressor 10, and a conduit 31, leading to condenser 11. Positioned within each of the conduit sections 28 and 30 are valves 32 and 33, respectively. Valve 33 is provided with a solenoid 34. As shown in Fig. 2, the solenoid 34 is electrically connected to one terminal 37*a* of a float switch 37 which is mounted vertically on the side of trap 17. The float switch 37, in turn, has a second terminal 37*b* connected to three-way valve 20, and a third or common terminal 37*c* connected to one side L_2 of the power input lines. The operation of the lever connector 37*d* of float switch 37 is effected by a float ball responsive to the level of the liquid or unevaporated refrigerant collected in trap 17.

Valve 32 of pressure conversion type, disposed in conduit section 28, is, in this instance, provided with a spring loaded element which resists the gas flow through this valve. The spring load on the element may be varied, as required, by turning the exposed end of a spring tensioning screw; the latter being threadably mounted on the valve housing and contacting the valve spring disposed within said housing. When valve 33 is opened and valve 32 is closed, the evaporated or gaseous refrigerant, which is discharged from compressor 10 at a given pressure, will pass through valve 33. When valve 33 is closed, the gaseous refrigerant passes through valve 32, and is restricted by the spring loaded element which causes a greater pressure to be built up on the compressor side of valve 32 than on the condenser side thereof. That is to say, a pressure differential on opposite sides of valve 32 results. When, however, valve 32 is closed and valve 33 is open, the latter valve, which is free of any restrictive orifice, does not cause any pressure differential to result in conduit section 30. The amount of gas restriction formed in valve 32 may be varied as desired by adjusting the spring pressure on the element in the manner heretofore described to accommodate any operational condition resulting by reason of the arrangement of the various parts of the system. However, in conventionally arranged systems, the restrictive device in valve 32 should be set so that there is approximately a 10-pound pressure differential developed. This 10-pound differential in pressure is transmitted through T-connection 24 and conduit 23 to the valve 20 which is mounted on trap 17. When valve 33 is closed, valve 20 is in such position of adjustment that conduit 23 communicates with the interior of trap 17 and simultaneously therewith the conduit 21 which communicates with conduit 14 is closed off. The actuation of valves 33 and 20, as heretofore mentioned, is simultaneously controlled by the position of float switch 37. When the liquid refrigerant within trap 17 reaches a predetermined level, float switch 37 closes valve 33 and adjusts valve 20 so that conduit 23 communicates with the interior of trap 17 and the port opening to the vent connection 21 is closed. The gas discharged from the compressor builds up in pressure as a result thereof and opens valve 32. When float switch 37 is in this position, the differential pressure then existing in the compressor discharge line 25 leading to valve 32, and imposed through conduit 23 upon the contents of the trap 17, is greater than the pressure maintained beyond the spring loaded valve 32 and imposed through conduits 28 and 31 upon the condenser 11 and receiver 12. The high pressure imposed upon the trap 17 automatically closes the check valve 18 in the drainage line 16 from the low pressure accumulator 13, and the pressure differential between trap 17 and receiver 12 is utilized to force the liquid refrigerant collected in trap 17 to flow out through a conduit 35, secured to the underside of trap 17, into receiver 12. A check valve 36 is provided in conduit 35 so as to permit flow of the liquid refrigerant only in the direction from trap 17 to receiver 12.

The effect of the pressure differential unit 27 is that it permits continuous flow of the gaseous refrigerant to the condenser 11 while at the same time the diverted liquid refrigerant may or may not be introduced into receiver 12. At all times, the pressure at the inlet side of condenser 11 remains substantially constant, thereby assuring continuous normal supply of refrigerant to the evaporator. By reason of the fact that the liquid refrigerant collected within trap 17 is emptied by the application of a greater gaseous pressure to trap 17 than exists in the receiver 12, it is not necessary that the trap 17 be disposed at a height greater than the receiver 12. Thus, by reason of applicant's return means, the relative position of receiver 12 to trap 17 is immaterial, and rearrangement of existing equipment such as the receiver 12 or accumulator 13 is unnecessary.

It will be obvious that the function of the pressure differential unit may be accomplished by manual operation of the valves 20 and 33 without the more convenient automatic controls as above described; also, that the valve 33 may be designed with a by-pass passage incorporating the valve 32.

While a particular embodiment of this invention is shown above, it will be understood, of course, that the invention is not to be limited thereto, since many modifications may be made, and it is contemplated, therefore, by the appended claims, to cover any such modifications as fall within the true spirit and scope of this invention.

I claim:

1. In a refrigerating system having a compressor, a condenser, a liquid refrigerant receiver, a high pressure conduit connecting the discharge side of the compressor with the condenser and the receiver in sequence, an evaporator, an accumulator, a low pressure conduit connecting the evaporator and the accumulator in sequence with the suction side of the compressor, the accumulator being adapted to separate and retain liquid refrigerant from the gaseous refrigerant flowing to the compressor, a trap, a conduit connection for drainage of liquid refrigerant from the accumulator into the trap, valve means in said drainage conduit operable to open said connection when the pressure in the trap is not greater than the pressure in the accumulator and to close said connection when the trap pressure exceeds the accumulator pressure, a conduit connection for transfer of the liquid from the trap into the receiver, valve means in said transfer conduit operable to open said connection when the trap pressure exceeds the receiver pressure and to close said connection when the trap pressure is less than the receiver pressure, a conduit connection for venting flash gaseous refrigerant from the trap into the low pressure suction conduit intermediate the evaporator and the ac-

cumulator, a conduit connection for admitting high pressure gaseous refrigerant to the trap from the discharge conduit intermediate the compressor and the condenser, valve means controlling the vent connection and the high pressure gaseous refrigerant connection and operable to selectively open to the trap either connection simultaneously with closing the other connection, and control means for operating said valve means automatically actuated by the high and low levels of liquid refrigerant in the trap; the combination of a pressure differential unit interposed in the compressor discharge conduit intermediate the condenser and the junction of the discharge conduit with the high pressure gaseous refrigerant connection to the trap, said unit having a pair of gaseous refrigerant flow passages endwardly connected in parallel and forming a section of the discharge conduit, a shut-off valve controlling one of said passages and operable to fully open or close said one passage, pressure conversion means controlling the other of said passages and adapted, when said shut-off valve is closed, to effect a differential pressure in the discharge conduit substantially greater on the compressor side of said unit than the pressure imposed on the condenser and receiver, and means for operating said shut-off valve associated with the automatic control means actuated by the liquid level in the trap, whereby the high level of liquid in the trap causes the greater differential pressure to be imposed on the trap effectively to force the liquid from the trap into the receiver.

2. In a refrigerating system having a compressor, a condenser, a liquid refrigerant receiver, a high pressure conduit connecting the discharge side of the compressor with the condenser and the receiver in sequence, an evaporator, an accumulator, a low pressure conduit connecting the evaporator and the accumulator in sequence with the suction side of the compressor, the accumulator being adapted to separate and retain liquid refrigerant from the gaseous refrigerant flowing to the compressor, a trap, a conduit connection for drainage of liquid refrigerant from the accumulator into the trap, valve means in said drainage conduit operable to open said connection when the pressure in the trap is not greater than the pressure in the accumulator and to close said connection when the trap pressure exceeds the accumulator pressure, a conduit connection for transfer of the liquid from the trap into the receiver, valve means in said transfer conduit operable to open said connection when the trap pressure exceeds the receiver pressure and to close said connection when the trap pressure is less than the receiver pressure, a conduit connection for venting flash gaseous refrigerant from the trap into the low pressure suction conduit intermediate the evaporator and the accumulator, a conduit connection for admitting high pressure gaseous refrigerant to the trap from the discharge conduit intermediate the compressor and the condenser, valve means controlling the vent connection and the high pressure gaseous refrigerant connection and operable to selectively open to the trap either connection simultaneously with closing the other connection, and control means for operating said valve means actuated by the high and low levels of liquid refrigerant in the trap; the combination of a pressure differential unit interposed in the compressor discharge conduit intermediate the condenser and the junction of the discharge conduit with the high pressure gaseous refrigerant connection to the trap, said unit including a gaseous refrigerant flow passage forming a section of the discharge conduit, adjustable flow regulating means for controlling a portion of said passage, pressure conversion means controlling another portion of said passage and adapted, when said flow regulating means is in one position of adjustment, to effect a differential pressure in the discharge conduit wherein the pressure imposed on the compressor side of said unit is greater than the pressure imposed on the condenser side of said unit, said pressure conversion means being adjustable to various predetermined settings to effect variance in the pressure differential imposed on said unit, and operative means for effecting adjustment of said flow regulating means, said operative means being associated with the control means actuated by the liquid level in the trap, whereby the high level of liquid in the trap causes the pressure differential imposed on said unit to be imposed on the trap and effect flow of the liquid within the trap into the receiver.

3. In a refrigerating system having a compressor, a condenser, a liquid refrigerant receiver, a high pressure conduit connecting the discharge side of the compressor with the condenser and the receiver in sequence, an evaporator, an accumulator, a low pressure conduit connecting the evaporator and the accumulator in sequence with the suction side of the compressor, the accumulator being adapted to separate and retain liquid refrigerant from the gaseous refrigerant flowing to the compressor, a trap, a conduit connection for drainage of liquid refrigerant from the accumulator into the trap, valve means in said drainage conduit operable to open said connection when the pressure in the trap is not greater than the pressure in the accumulator and to close said connection when the trap pressure exceeds the accumulator pressure, a conduit connection for transfer of the liquid from the trap into the receiver, valve means in said transfer conduit operable to open said connection when the trap pressure exceeds the receiver pressure and to close said connection when the trap pressure is less than the receiver pressure, a conduit connection for venting flash gaseous refrigerant from the trap into the low pressure suction conduit intermediate the evaporator and the accumulator, a conduit connection for admitting high pressure gaseous refrigerant to the trap from the discharge conduit intermediate the compressor and the condenser, valve means controlling the vent connection and the high pressure gaseous refrigerant connection and operable to selectively open to the trap either connection simultaneously with closing the other connection, and control means for operating said valve means automatically actuated by the high and low levels of liquid refrigerant in the trap; the combination of a pressure differential unit interposed in the compressor discharge conduit intermediate the condenser and the junction of the discharge conduit with the high pressure gaseous refrigerant connection to the trap, said unit including a gaseous refrigerant flow passage having a pair of branches interconnected to one another at opposite ends and forming a section of the discharge conduit, adjustable flow regulating means in one of said passage branches, pressure conversion means in the other of said passage branches and adapted, when said flow regulating means is in one position of adjustment, to effect the build-up of a differential pressure in the discharge conduit wherein the pressure imposed by the gaseous refrigerant on the compressor side of said unit is greater than the pressure of the gaseous refrigerant imposed on the condenser side of said unit, and operative means being associated with said flow regulating means for effecting adjustment thereof and with the automatic control means, actuated by the liquid level in the trap, whereby the high level of liquid refrigerant in the trap causes the pressure differential imposed on said unit to be transmitted through the conduit connections to effect flow of the liquid refrigerant in the trap into the receiver simultaneously with the uninterrupted flow of the gaseous refrigerant into the condenser.

4. In a refrigerating system having a compressor, a condenser, a liquid refrigerant receiver, a high pressure conduit connecting the discharge side of the compressor with the condenser and the receiver in sequence, an evaporator, an accumulator, a low pressure conduit connecting the evaporator and the accumulator in sequence with the suction side of the compressor, the accumulator being adapted to separate and retain liquid refrigerant

from the gaseous refrigerant flowing to the compressor, a trap, a conduit connection for drainage of liquid refrigerant from the accumulator into the trap, valve means in said drainage conduit operable to open said connection when the pressure in the trap is not greater than the pressure in the accumulator and to close said connection when the trap pressure exceeds the accumulator pressure, a conduit connection for transfer of the liquid from the trap into the receiver, valve means in said transfer conduit operable to open said connection when the trap pressure exceeds the receiver pressure and to close said connection when the trap pressure is less than the receiver pressure, a conduit connection for venting flash gaseous refrigerant from the trap into the low pressure suction conduit intermediate the evaporator and the accumulator, a conduit connection for admitting high pressure gaseous refrigerant to the trap from the discharge conduit intermediate the compressor and the condenser, valve means controlling the vent connection and the high pressure gaseous refrigerant connection and operable to selectively open to the trap either connection simultaneously with closing the other connection, and control means for operating said valve means automatically actuated by the high and low levels of liquid refrigerant in the trap; the combination of a pressure differential unit interposed in the compressor discharge conduit intermediate the condenser and the junction of the discharge conduit with the high pressure gas connection to the trap, said unit including a gaseous refrigerant flow passage having a pair of branches interconnected to one another at opposite ends and forming a section of the discharge conduit, a shut-off valve for controlling one branch of said passage and being adjustable to a fully open or closed position, a spring biased pressure conversion means controlling the other branch of said passage and adapted, when said shut-off valve is closed, to effect the build-up of a predetermined differential pressure in the discharge conduit wherein the pressure imposed on the compressor side of said unit is substantially greater than the pressure imposed on the condenser side of said unit, means mounted on said pressure conversion means to effect variance of the spring bias pressure, and operative means for effecting adjustment of said shut-off valve, said operative means being associated with the automatic control means for synchronous actuation with the valve means whereby the high level of liquid refrigerant in the trap causes the pressure differential imposed on said unit to be imposed on the trap and effect flow into the receiver of the liquid refrigerant within the trap.

5. In a refrigerating system having a compressor, an evaporator, an accumulator interposed between the compressor and evaporator for separating and retaining liquid refrigerant from the gaseous refrigerant flowing from the evaporator to the suction side of the compressor, a trap communicating with the accumulator for collecting therein a predetermined amount of the liquid refrigerant separated and retained by the accumulator, said trap having a first portion thereof in communication with the accumulator and a second portion thereof in communication with the intake side of the evaporator, valve means disposed within said trap first portion for permitting flow of liquid refrigerant from the accumulator to the trap, valve means disposed within said trap second portion for permitting only flow of liquid refrigerant from the trap to the intake side of the evaporator, and adjustable control means communicating with the trap and, when in one position of adjustment, effecting communication of said trap with the evaporator side of the accumulator and, when in a second position of adjustment, effecting communication of the trap with the discharge side of the compressor, the position of adjustment of said control means being dependent upon the level of liquid refrigerant collected within the trap; the combination of a pressure differential unit communicating with the compressor discharge side wherein the point of communication between the trap and the compressor is interposed said differential unit and the discharge side of the compressor, said differential unit including a gaseous refrigerant flow passage having a pair of branches interconnected to one another at opposite ends, adjustable flow regulating means disposed within one of said passage branches, the position of adjustment of said regulating means being dependent upon the position of adjustment of the control means, and pressure conversion means disposed within the other passage branch; said conversion means, when said regulating means is in one position of adjustment, effecting a build-up of a pressure differential between the compressor and evaporator sides of said differential unit, the greater pressure being imposed on the compressor side, whereby said pressure differential is imposed on the trap to effect discharge of the liquid refrigerant collected therein into the intake side of the evaporator.

References Cited in the file of this patent

UNITED STATES PATENTS

2,570,979	Phillips	Oct. 9, 1951
2,590,741	Watkins	Mar. 25, 1952
2,655,008	Sloan et al.	Oct. 13, 1953