(12) INTERNATIONAL APPLICATION PUBLISHED UNDER THE PATENT COOPERATION TREATY (PCT)

(19) World Intellectual Property Organization
International Bureau

(43) International Publication Date
20 April 2023 (20.04.2023)

WIPO | PCT

(10) International Publication Number
WO 2023/064792 A1

(51) International Patent Classification:
A61F 9/00 (2006.01) *A61N 5/06* (2006.01)

(21) International Application Number:
PCT/US2022/077945

(22) International Filing Date:
12 October 2022 (12.10.2022)

(25) Filing Language: English

(26) Publication Language: English

(30) Priority Data:
63/262,419 12 October 2021 (12.10.2021) US

(71) Applicant: **ACUCELA INC.** [US/US]; 600 University Street, Suite 2900, Seattle, Washington 98101-4174 (US).

(72) Inventors: **KUBOTA, Ryo**; c/o Acucela Inc., 600 University Street, Suite 2900, Seattle, Washington 98101-4174 (US). **JOSHI, Nabin**; 160 East 56th Street, 7th Floor, New York, New York 10022 (US). **SELENOW, Arkady**; 160 East 56th Street, 7th Floor, New York, New York 10022 (US). **ALI, Steven**; 160 East 56th Street, 7th Floor, New York, New York 10022 (US). **WATANABE, Masakazu**; 600 University Street, Suite 2900, Seattle, Washington 98101-4174 (US). **GUPTA, Amitava**; 5322 Fox Den Road, Roanoke, Virginia 24018 (US).

(74) Agent: **SHIMMICK, John K.** et al.; FisherBroyles, LLP, 945 East Paces Ferry Road NE, Suite 2000, Atlanta, Georgia 30326 (US).

(81) Designated States *(unless otherwise indicated, for every kind of national protection available)*: AE, AG, AL, AM, AO, AT, AU, AZ, BA, BB, BG, BH, BN, BR, BW, BY, BZ, CA, CH, CL, CN, CO, CR, CU, CV, CZ, DE, DJ, DK, DM, DO, DZ, EC, EE, EG, ES, FI, GB, GD, GE, GH, GM, GT, HN, HR, HU, ID, IL, IN, IQ, IR, IS, IT, JM, JO, JP, KE, KG, KH, KN, KP, KR, KW, KZ, LA, LC, LK, LR, LS, LU, LY, MA, MD, MG, MK, MN, MW, MX, MY, MZ, NA, NG, NI, NO, NZ, OM, PA, PE, PG, PH, PL, PT, QA, RO, RS, RU, RW, SA, SC, SD, SE, SG, SK, SL, ST, SV, SY, TH, TJ, TM, TN, TR, TT, TZ, UA, UG, US, UZ, VC, VN, WS, ZA, ZM, ZW.

(84) Designated States *(unless otherwise indicated, for every kind of regional protection available)*: ARIPO (BW, GH, GM, KE, LR, LS, MW, MZ, NA, RW, SD, SL, ST, SZ, TZ, UG, ZM, ZW), Eurasian (AM, AZ, BY, KG, KZ, RU, TJ, TM), European (AL, AT, BE, BG, CH, CY, CZ, DE, DK, EE, ES, FI, FR, GB, GR, HR, HU, IE, IS, IT, LT, LU, LV, MC, ME, MK, MT, NL, NO, PL, PT, RO, RS, SE, SI, SK, SM, TR), OAPI (BF, BJ, CF, CG, CI, CM, GA, GN, GQ, GW, KM, ML, MR, NE, SN, TD, TG).

(54) Title: ADAPTIVE SYSTEM FOR THE TREATMENT OF MYOPIA PROGRESSION

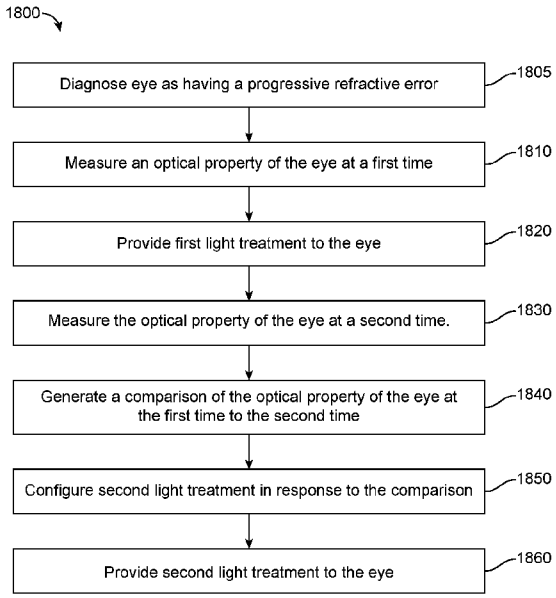

FIG. 18

(57) Abstract: Treatment for the progression of refractive error of an eye is adapted based on a subject's response to therapy. The optical property of an eye can be measured before and after treatment, and a subsequent treatment configured based on the subject's response. The optical property of the eye may comprise one or more of refractive data or axial length data. The optical properties before and after treatment can be compared, and the subsequent treatment configured in response to the comparison. A characteristic of the stimulus can be adjusted in response to the comparison, such as a duration of daily treatment or an intensity of the stimulus during treatment. In some embodiments, the comparison corresponds to a transient change in the optical property of the eye, and the treatment adjusted in response to the transient change.

WO 2023/064792 A1

[Continued on next page]

Published:
— *with international search report (Art. 21(3))*

ADAPTIVE SYSTEM FOR THE TREATMENT OF MYOPIA PROGRESSION

RELATED APPLICATIONS

[0001] The present application claims priority to U.S. Provisional Patent Application No. 63/262,419, filed October 12, 2021, entitled "ADAPTIVE SYSTEM FOR THE TREATMENT OF MYOPIA PROGRESSION", the entire disclosure of which is incorporated herein by reference.

[0002] The subject matter of the present application is related to PCT/US2019/043692, filed on July 26, 2019, entitled "ELECTRONIC CONTACT LENS TO DECREASE MYOPIA PROGRESSION", published as WO/2020/028177 on February 6, 2020, PCT/US2020/044571, filed July on 31, 2021, entitled" DEVICE FOR PROJECTING IMAGES ON THE RETINA", published as WO/2021/022193 on February 4, 2021, PCT/US2021/036100, filed on June 7, 2021, entitled "PROJECTION OF DEFOCUSED IMAGES ON THE PERIPHERAL RETINA TO TREAT REFRACTIVE ERROR," published as WO 2021/252319 on December 16, 2021, PCT/US2021/036102, filed on June 7, 2021, entitled "STICK ON DEVICES USING PERIPHERAL DEFOCUS TO TREAT PROGRESSIVE REFRACTIVE ERROR," published as WO 2021/252320 on December 16, 2021, and PCT/US2021/032162, filed May 13, 2021, entitled "ELECTRO-SWITCHABLE SPECTACLES FOR MYOPIA TREATMENT," published as WO 2021/231684 on November 18, 2021, the entire disclosures of which are incorporated herein by reference.

BACKGROUND

[0003] Prior approaches to treating refractive error such as myopia can be less than ideal in at least some respects. Spectacle lenses, contact lenses, and refractive surgery can be used to treat refractive errors of the eye. However, lenses must be worn in order to correct the errors, and uncorrected refractive error can impact a person's ability to achieve and fully participate in school, sports, and other activities. Although surgery can be performed to decrease refractive error, surgery comes with risks, such as infection and degraded vision in at least some instances. Also, these approaches do not address the underlying changes in the length of the eye that is related to refractive error such as myopia.

[0004] Work in relation to the present disclosure suggests that the retina of many species, including human beings, responds to defocused images and is repositioned through scleral remodeling, in order to decrease the blur caused by the defocus. The

mechanism of the generation of the growth signal is still under study, but one observable phenomenon is an increase in thickness of the choroid. A defocused image can cause the choroid thickness to change, which is related to the axial length of the eye. Changes to the axial length of the eye can alter the refractive error by changing the position of the retina in relation to the cornea. For example, an increase in axial length can increase myopia of an eye by increasing the distance between the cornea and retina.

[0005] While the defocus of images can play a role in choroidal thickness and changes in the axial length of the eye, the prior approaches are less than ideally suited to address refractive error of the eye related to axial length. Although pharmaceutical treatments have been proposed to treat myopia associated with axial length growth, these treatments can have less than ideal results and have not been shown to safely treat refractive error in at least some instances. Although light has been proposed as a stimulus to alter the growth of the eye, at least some of the prior devices can provide less than ideal results. Also, the time of treatment can be longer than would be ideal, and at least some of the prior approaches may be more complex than would be ideal.

[0006] It would be helpful to have improved approaches for determining effective amounts of therapy to treat the progression of refractive error. The prior approaches can be somewhat less predictable than would be ideal, and it would be helpful to improve predictability. Also, it would be helpful to determine appropriate amounts of therapy in response to treatment, and the prior approaches can be somewhat open loop in at least some instances. Further, the prior approaches may not be well suited for adapting the treatment in response to characteristics of different eyes, which may respond differently to treatment.

[0007] Therefore, new approaches are needed to treat refractive error of the eye that ameliorate at least some of the above limitations of the prior approaches.

SUMMARY

[0008] The presently disclosed systems, methods and apparatuses are directed to improved treatment for the progression of refractive error that can be adapted based on a subject's response to therapy. The treatment may comprise an optical stimulus that is provided to the eye with a focus at a distance from the retina to provide a blurred image on the retina, which can decrease the progression of myopia. The optical properties of an eye can be measured before and after treatment, and a subsequent treatment configured based on the subject's response. The optical properties of the eye may comprise one or

more of refractive data or axial length data, which can be used to evaluate the response of the subject to treatment. The optical properties before and after treatment can be compared, and the subsequent treatment configured in response to the comparison. In some embodiments, a characteristic of the stimulus is adjusted in response to the comparison, such as a duration of daily treatment or an intensity of the stimulus during treatment. In some embodiments, the comparison corresponds to a transient change in the optical property of the eye, and the treatment is adjusted in response to the transient change. In some embodiments, the stimulus is generated with a display, which allows the stimulus to be readily configured in response to the transient change of the optical property of the eye.

INCORPORATION BY REFERENCE

[0009] All patents, applications, and publications referred to and identified herein are hereby incorporated by reference in their entirety and shall be considered fully incorporated by reference even though referred to elsewhere in the application.

BRIEF DESCRIPTION OF THE DRAWINGS

[0010] A better understanding of the features, advantages and principles of the present disclosure will be obtained by reference to the following detailed description that sets forth illustrative embodiments, and the accompanying drawings of which:

[0011] FIG. 1A shows a retinal stimulation device, suitable for incorporation in accordance with some embodiments of the present disclosure;

[0012] FIG. 1B shows a spectacle lens based retinal stimulation device comprising a display and a housing to contain the electronics for operating the near eye display, suitable for incorporation in accordance with some embodiments of the present disclosure;

[0013] FIG. 1C shows a spectacle lens based retinal stimulation device as in Figure 1B, in which the eye has moved and different display elements have been activated in response to the eye movement, suitable for incorporation in accordance with some embodiments of the present disclosure;

[0014] FIG. 2A shows a soft contact lens, suitable for incorporation in accordance with some embodiments of the present disclosure;

[0015] FIG. 2B shows soft contact lens with embedded light sources, optics, and electronics for projecting images with defocus on the periphery of the retina of a user,

suitable for incorporation in accordance with some embodiments of the present disclosure;

[0016] FIG. 3 shows a system diagram of the function of the components of the spectacles and contact lens as in FIGS. 1A to 2, suitable for incorporation in accordance with some embodiments of the present disclosure;

[0017] FIG. 4 shows a lens such as a contact lens or spectacle comprising an inner zone to provide clear vision and an outer zone to provide defocus to treat refractive error, suitable for incorporation in accordance with some embodiments of the present disclosure;

[0018] FIG. 5 shows lens in which the outer zone comprises a plurality of lenslets, in accordance with some embodiments;

[0019] FIG. 6 shows a lens, in which the outer zone comprises a plurality of separated positive zones to focus light from the outer zone anterior to the retina.

[0020] FIG. 7 shows a plurality of stimuli and an image on a display as seen by a user, in accordance with some embodiments;

[0021] FIG. 8A shows stimuli on a screen to provide myopically defocused stimuli to the retina, in accordance with some embodiments;

[0022] FIG. 8B shows the corresponding dimensions of the myopically defocused stimuli on the retina in degrees, in accordance with some embodiments;

[0023] FIG. 9 shows a stimulus depicting a natural scene, such as an annular flower pattern, in accordance with some embodiments;

[0024] FIG. 10 shows image contrast and a histogram with red (R), blue (B) and green (G) values for the stimuli shown in FIGS. 8A to 9, in accordance with some embodiments;

[0025] FIG. 11 shows an image suitable for modification and incorporation as a stimulus as described herein, in accordance with some embodiments;

[0026] FIG. 12 shows an image similar to the image of FIG. 11 that has been processed to provide an improved stimulus, in accordance with some embodiments;

[0027] FIG. 13 shows an image of spatial frequencies distributions of the image of FIG. 11, in accordance with some embodiments;

[0028] FIG. 14 shows an image of spatial frequencies distributions of the image of FIG. 13, which is used as the stimulus, in accordance with some embodiments;

[0029] FIG. 15 shows a plot of image spatial frequency in cycles per degree and the log of the energy at each frequency for the stimulus images shown in FIGs. 8B and 9, in accordance with some embodiments;

[0030] FIG. 16 shows a system for treating refractive error of the eye, in accordance with some embodiments;

[0031] FIG. 17 show an optical system to project stimuli onto the retina, in accordance with some embodiments; and

[0032] FIG. 18 shows a method of decreasing a progression of refractive error of an eye, in accordance with some embodiments.

DETAILED DESCRIPTION

[0033] The following detailed description provides a better understanding of the features and advantages of the inventions described in the present disclosure in accordance with the embodiments disclosed herein. Although the detailed description includes many specific embodiments, these are provided by way of example only and should not be construed as limiting the scope of the inventions disclosed herein.

[0034] The presently disclosed methods and apparatus can be configured in many ways to provide retinal stimulation as described herein. The presently disclosed systems, methods and apparatuses are well suited for combination with many prior devices, such as one or more of an ophthalmic device, a TV screen, a computer screen, a virtual reality ("VR") display, an augmented reality ("AR") display, a handheld device, a mobile computing device, a tablet computing device, a smart phone, a wearable device, a spectacle lens frame, a spectacle lens, a near eye display, a head-mounted display, a goggle, a contact lens, an implantable device, a corneal onlay, a corneal inlay, a corneal prosthesis, or an intraocular lens. Although specific reference is made to spectacles and contact lenses, the presently disclosed methods and apparatus are well suited for use with any of the aforementioned devices, and a person of ordinary skill in the art will readily appreciate how one or more of the presently disclosed components can be interchanged among devices, based on the teachings provided herein.

[0035] In some embodiments, stimulation of the retina with defocused light provides a measurable change in axial length and choroidal thickness. The stimulation can be provided in many ways and may comprise active stimulation, e.g. with a light source, or passive stimulation, e.g. with a natural scene. In some embodiments the stimulation is provided with an apparatus comprising a chin rest in order for the subject to rest

comfortably. Alternatively or in combination, the stimulation can be provided with a wearable apparatus such as helmet or eyeglasses, in which the stimulation and projection system can be worn and supported by the subject, for example.

[0036] In some embodiments, active stimulation is provided using an optical apparatus comprising a chin rest, in which the subject positions his or her chin on the chin rest and views a video or a stationary scene at primary gaze at a distance of 20 feet or more. In some embodiments, the optical apparatus comprises an optical bench. Alternatively or in combination, the apparatus may comprise a wearable apparatus as described herein. The distance may comprise a real physical distance to the image, or a distance from the pupil of the subject to a virtual image, for example. In some embodiments, the optical apparatus comprises lenses that correct the subject's refractive error and provides a corrected visual acuity to the subject, such as a best corrected visual acuity to the subject. While positioned as described, the apparatus focuses images to an in-focus image anterior to the retina, e.g. with a myopic defocus, such that the images arrive on the retina with at least some defocus and blur. While the apparatus can be configured in many ways, the apparatus may comprise light sources, masks, micro-lenses and beam splitters to generate an image with a myopic defocus in the image with an amount in a range from +2.00D to +8.00D. While the image can be generated in many ways with the defocus, in some embodiments the image is transmitted through the lenses provided to correct refractive error of the subject and is projected through the natural pupil of the eye of the subject at an angle so that the projected image is incident on the retinal surface at an appropriate eccentricity to the fovea and subject's line of sight without being vignetted. The angle of eccentricity can be any suitable angle as described herein, such as an angle within a range from 6 degrees to 22.5 degrees (half angle, 12 degrees to 45 degrees full angle), and the angle may correspond to a circle of an annular region comprising a diameter corresponding to an angle within a range from 12 degrees to 45 degrees, for example.

[0037] Work in relation to the present disclosure suggests that changes in one or more of axial length or choroidal thickness can be measured and detected upon completion of the stimulus treatment of an eye of a subject, for example within about an hour of completion of a stimulus treatment. In some embodiments, transient changes in axial length and choroidal thickness are measured by measuring axial length and choroidal thickness of the subject immediately upon the termination of stimulation. The duration of a stimulus treatment can be of any suitable duration, such as from 1 to 6 hours in duration and may be within a range from 60 to 90 minutes, for example. In some embodiments,

the treatment is performed, and transient changes are measured in the morning local time. In some embodiments, the transient change in axial length comprises a difference between a first axial length measured prior to the start of the treatment on the day of treatment and a second axial length measured on the day of treatment after completion of the treatment with the stimulus. In some embodiments, the transient changes from one or treatment sessions are used as inputs to determine if a particular device configuration to inhibit myopia progression is effective. Alternatively or in combination, the transient change may also be used to improve one or more parameters of the apparatus, such as magnitude of defocus, brightness of the projected myopically defocused image, the chromaticity of the projected image, and other characteristics of the stimulation as described herein.

[0038] The present inventors have conducted clinical studies and measured transient changes in axial length in accordance with the present disclosure. Transient changes in axial length in response to a stimulus in accordance with the present disclosure have been measured in a clinical study as described herein.

[0039] In some embodiments, a transient change in one or more of axial length, choroidal thickness or refractive data is used as a surrogate for long term clinical verification of the treatment apparatus. The transient change in response to treatment can be measured over any suitable duration, such as before and after treatment on the same day or a longer duration, such as prior to treatment on a plurality of days and after treatment on the plurality of days, such as a week after treatment or a month after treatment on the plurality of days. In some embodiments, the treatment over the duration of a week or a month comprises a treatment on at least half of the days of the duration, for example on at least 4 days of a week or at least 16 days of a month.

[0040] The transient change in response to treatment can be measured in any suitable way, such as one or more of refractive data of the eye, axial length of the eye, or choroidal thickness of the eye. The refractive data may comprise any suitable data related to the refractive properties of the eye, such as one or more of sphere, cylinder, axis, aberrations, spherical aberration, coma trefoil, wavefront data, Zernike coefficients or wavefront maps for the illuminated location of the retina. The refractive data can be measured with any appropriate apparatus, such as a phoropter, trial lenses, an autorefractor, a wide field autorefractor, a narrow field auto refractor, a scanning slit auto refractor, an aberrometer or a wavefront sensor. In some embodiments, the refractive data is measured with a natural pupil. Alternatively or in combination, the refractive data

can be measured with a dilated pupil to provide cycloplegic refractive data when the eye has been dilated with a mydriatic agent. The axial length and choroidal thickness can be measured with any appropriate instrument, such as an optical coherent tomography (OCT) biometer, which measures the length of the eye from the cornea to the retina. The choroidal thickness may be measured with a similar instrument or the same instrument that measures the axial length.

[0041] FIG. 1A shows a retinal stimulation device to one or more of decrease myopia progression or at least partially reverse myopia progression. The device comprises a lens 10 to support a plurality of light sources. The plurality of light sources can be coupled to one or more optical components to provide a stimulus to the retina as described herein. In some embodiments, the lens 10 comprises a spectacle lens 74. In some embodiments, the lens 10 is shaped to correct spherical and cylindrical refractive errors of the user, to provide corrected visual acuity to through the lens. The plurality of light sources may comprise one or more of projection units 12 or a display 74 such as a near eye display. The plurality of light sources is arranged about the central portion of the lens so as to provide light stimulation to an outer location of the retina such as the peripheral retina as described herein. In some embodiments, the light sources are located in an approximately annular region so as to provide stimulation to the peripheral retina. The light sources can be arranged in a generally annular pattern, for example in quadrants, so as to correspond to quadrants of the peripheral retina outside the macula. Each of the plurality of light sources can be configured to project a pattern anterior to the retina with an appropriate stimulus pattern as described herein. In some embodiments, light from the light sources traverses an optical axis of the eye so as to stimulate the retina at a location on an opposite side of the retina from the light source.

[0042] In some embodiments, the projection units 12 are configured to emit light rays to enter the pupil of the eye without substantial aliasing. In some embodiments, the pupil of the eye may be enlarged by appropriate amounts of illumination or application of mydriatic agents so that a greater area of the retinal surface is accessible to the stimulus projected by the projection units 12.

[0043] In some embodiments, the plurality of light sources is configured to remain static while the user views an object. Alternatively, the light sources can be configured to move in response to eye movement, for example with the selective activation of pixels as described herein.

[0044] Although reference is made to the plurality of light sources supported on a lens, the light sources can be supported on any suitable optically transmissive substrate, such as a beam splitter or a substantially flat optical component, and the light sources may comprise light sources of a pixel display such as an AR or VR display. In some embodiments, the display 72 comprises pixels 94 which are selectively activated to provide a stimulus to the retina as described herein. Alternatively or in combination, the projection units 12 may comprise a shaped structure to provide the stimulus to the retina as described herein.

[0045] In some embodiments, the pixels are configured to emit a plurality of colors, so that the projected light can be combined to create any suitable color or hue, such as white light, for example.

[0046] In some embodiments, the plurality of light sources is supported a head mounted support, such as eyeglass frame 76 on spectacles 70.

[0047] FIGS. 1B and 1C depict spectacles 70 for the treatment of refractive error of the eye, such as spherical refractive error, although any suitable vision device as described herein can be appropriately modified in accordance with the embodiments disclosed herein. The plurality of light sources can be coupled to one or more optical components to provide a stimulus to the retina as described herein. The spectacles 70 may comprise one or more components of commercially available augmented reality glasses. The spectacle 70 may comprise one or more displays 72 for retina stimulation. The near eye displays 72 may be mounted to lenses 74. The lenses 74 may be spectacle lenses supported by eyeglass frame 76. The lens 74 may be a corrective or non-corrective lens. The lens 74 may be a plano lens, a spherical corrective lens, an astigmatic correction lens, or a prism correction lens. In some embodiments, the near eye display is located away from an optical zone to provide clear central vision. An optical axis may extend along a line of sight from an object of the subject's regard, though the lens 74 to a fovea of the eye. In some embodiments, the spectacle 70 comprises an eye tracker suitable for incorporation in accordance with the present disclosure. The near eye display 72 can be programmed to selectively activate pixels 94, in order to provide peripheral stimulation to the retina, as described herein. In some embodiments, a layer of a plastic substrate bearing micro-lenses is attached to the micro-display in order to generate the desired level of defocus and stimulation at the retina. The selectively activatable pixels may comprise a group of pixels, which can be selectively activated together, e.g. a first group of pixels 94a, a second group of pixels 94B, a third group of pixels 94C, and a fourth group of

pixels 94D. The groups of pixels can be arranged to provide an appropriate eccentricity with respect to a line of sight of the subject, so as to provide peripheral retinal stimulation as described herein.

[0048] In some embodiments, a near eye display 72 comprises a combination of a micro-display and a micro-optic. In some embodiments, the micro-optic is configured to collect, substantially collimate and focus the light rays emanating from the micro-display. In some embodiments, the micro-optic is configured to form an image anterior to or posterior to the retina as described herein. In some embodiments, the distance of the near eye display from the entrance pupil of the eye is within a range from about 10 mm to about 30 mm, for example about 15 mm. The micro-display can be placed on a transparent substrate, such as the front or back surface of the lens 74 of the spectacles 70. When the micro-display is placed on the front surface of the lens 94, then the focus of the micro-displays may be affected by the cylindrical correction on the back surface of the lens 94.

[0049] In some embodiments, the focus of the pixels in a micro-display may vary based on their location on the lens 74 and the refractive correction provided by the lens in that area. In some embodiments, the focus of the pixels may be fixed. In some embodiments, the focus of the pixels may vary based on the sensed position of the cornea to account for the refraction of the cornea and the lens of the eye. In some embodiments, the pixels are defocused to create a defocused spot on the retina about 1 mm in diameter.

[0050] Light emitted by the pixels 94 in the micro-display of the near eye display can be one or more of substantially collimated or focused before being directed to the pupil of the eye. In some embodiments, a micro-lens array is aligned to the pixels of the near eye display, so that rays from the near eye display can enter the pupil and form an image anterior to or posterior to the retina. In some embodiments, the width of the near eye display corresponds to a subject's field of view. In some embodiments, the extent of the near eye display may be substantially similar to the extent of the lens 74 of the spectacles 70.

[0051] In some embodiments, the device provides unimpaired central vision so that the quality of life and quality of vision of the users are not adversely affected. In some embodiments, central vision comprises of a field of view of +/- 5 degrees or greater, preferably +/- 7.5 degrees or greater, such as +/-12.5 degrees, covering the macula, while foveal vision used for fixation has a field of view of +/-1.0 degrees. In some embodiments, the defocused image is projected at an outer portion of the retina toward

the periphery of the retina, for example within a range from 15 degrees (full angle, or +/- 7.5 degrees) to 40 degrees (full angle, or +/- 20 degrees) eccentric to the fovea and can be within a range from 20 degrees to 40 degrees, for example within a range from 20 degrees to 30 degrees. In some embodiments, the micro-display 72 does not obstruct the central vision field of view. In some embodiments, the pixels 94 do not obstruct the central vision field of view.

[0052] In some embodiments, the micro-displays and optics are configured to project light onto outer regions of the retina sufficiently far from the fovea, that the illumination remains substantially fixed even with eye movement. In some embodiments, the point of regard is monitored and the desired location of the pixels to be activated on the micro-display is determined, e.g. by a computations with a processor, such that an image is projected at the desired location on the retina, allowing sustained stimulation at the same retinal location. In some embodiments, the point of regard on the spectacle plane or the plane of the micro-display is calculated by monitoring the horizontal, the vertical and torsional displacement of the eye relative to the primary position.

[0053] The point of regard can be determined with a in many ways, for example with an eye position sensor such as a magnetic sensor or an optical sensor. In some embodiments, a search coil embedded in the eyeglass frame is used to track eye movements. The coil embedded in the eyeglass frame can be coupled to a magnetic structure placed on the eye, such as one or more of a coil on a contact lens, a coil implanted in the eye, a magnetic material on a contact lens, or a magnetic material implanted in the eye. In some embodiments, the sensor comprises an optical sensor, such as a position sensitive detector or an array sensor to measure a position of the eye optically. The optical sensor can be configured to measure a position of the eye in many ways, for example configured to measure a position of one or more of a corneal reflex from a light source, a pupil, a limbus or a sclera. The eyeglass frame may support an additional light source to illuminate the eye, for example to generate a corneal reflex. Data from the sensor can provide the location of the coaxially sighted corneal light reflex ("CSCLR"), and hence the direction of the visual axis and the location of the fovea. The point of regard, visual axis, optical axis, nodes of the eye, and CSCLR are described in "Ocular axes and angles: time for better understanding", Srinivasan, S., in J CATARACT REFRACT SURG – VOL 42, MARCH 2016. In some embodiments, the processor, using the eye position sensor, may be configured to adjust the optics, such as the pixels in the micro display to reduce movement of the stimulated locations of the retina in response to

eye movement. In some embodiments, target locations of the peripheral images are computed from the location of the fovea based on the information form the eye position sensor and a real time ray tracing calculation provides the locations of the pixels to be activated in the micro-display. The time to selectively switch to a second plurality of pixels in response to the eye movement can be less than 100 milliseconds, for example less than 20 milliseconds.

[0054] In some embodiments, the location of the pixels in the micro-display to be activated to form the outer image toward the periphery of the retina is referenced from the optical center of the eyeglass optics, since it is the point of regard at primary gaze. In some embodiments, the location of the point of regard is calculated by taking into account eye movement relative to the position of the eye at primary gaze and calculating the location of the pixels to be activated with reference to the new point of regard. For example, FIG. 1B shows active pixels 94 when a subject is looking level and straight ahead, so-called primary gaze, while FIG. 1C shows active pixels 94 when a subject is looking up and to the left. In such a case, the shape of the array of pixels may be the same, but translated up and to the left, or the shape of the array may change.

[0055] In some embodiments, the device is binocular and comprises a micro-display and optics for each eye of the user. The micro-display can be optically coupled with one or more micro-optical components, designed to substantially collimate the illumination generated by the pixels of the micro-display and rendered convergent, before entering the pupil.

[0056] In some embodiments, a display 72 is mounted on the outer side of a spectacle lens and aligned with the spectacle lens optic such that the near eye display can provide a field of view of +/-40 degrees or greater, so that the micro-display can continue to provide peripheral retinal stimulus for the normal range of eye movements, typically +/-15 degrees laterally and +10 to -20 degrees vertically, including downgaze when reading or viewing near objects. In some embodiments, light from the micro-display is transmitted through the spectacle lens optic and provided with the refractive correction of the user.

[0057] In some embodiments, the optical system is configured to form the images anterior to the retina and comprises one or more of a single micro-lens (lenslet), a plurality of micro-lenses (lenslet array), a compound lens, such as a Gabor lens, a micro-prism, or a micro-mirror, or a combination thereof. In some embodiments, light baffles and micro-mirrors are arranged to ensure that the amount of light not captured by the

micro-optic is substantially decreased, e.g. minimized, in order to reduce stray light and light escaping from the front side of the display.

[0058] In some embodiments, a pixel fill factor less than 10% (0.1) is sufficiently sparse to provide a clear view of the foveal and macular image. In some embodiments, the fill factor is in the range of 0.01 to 0.3 and can be within a range from 0.05 to 0.20. For example, an array of pixels of pixel size 5 microns and a pixel pitch of 20 microns leads to a fill factor of 0.06. A low fill factor may also reduce the complexity of the manufacturing process and reduces the cost of such micro-optic displays.

[0059] In some embodiments, the micro-optic array is designed to be optically aligned with the display, so that light from a single or a plurality of pixels 94 can be collected, collimated and focused to be directed to the pupil of the user at primary gaze. The density of these micro-optical elements can control the overall visibility of the near eye display. In some embodiments, the micro-optic has a low fill factor (preferably equal to or less than 0.1) so that the overall light transmission through the near eye display will be acceptable to users and allow the subject to view objects.

[0060] In some embodiments, the device comprises a switchable micro-optic array that can be switched between a plano (no optical power) state and an activated state by electro-optical components, utilizing for example a liquid crystal or a LC based material that can be switched from one refractive index to another, or one polarization to another, for example. In some embodiments, the micro-optic array does not scatter light or distort images of the real world when it is not activated.

[0061] In some embodiments, the location of the pixels in the micro-display to be activated to form the outer image toward the periphery of the retina is referenced from the optical center of the eyeglass optics, since it is the point of regard at primary gaze. In some embodiments, the location of the point of regard is calculated by taking into account eye movement relative to the position of the eye at primary gaze and calculating the location of the pixels to be activated with reference to the new point of regard.

[0062] In some embodiments, a plurality of pixels is activated to form the light source that is imaged by the micro-optics. The optical design of the micro-optics and its separation from the micro-display can be configured to provide the focal length of the image delivery system, the image magnification of the image projected on the retina and the blur caused by diffraction, as measured as the Airy disc diameter of the optical delivery system.

[0063] Work in relation to the present disclosure suggests that the retina perceives changes in image blur caused by higher order aberrations present in the defocused image (in addition to the spherical defocus), including longitudinal chromatic aberration (LCA), higher order spherical aberration, astigmatism, etc. that are sensitive to the sign of the defocus. Based on the teachings provided herein a person of ordinary skill in the art can conduct experiments to determine whether the retina can recognize a myopic blur from a hyperopic blur when the depth of focus of the device is greater than or nearly equal to the magnitude of defocus. The device as described herein can be appropriately configured to provide appropriate amounts of defocus at appropriate locations, for example.

[0064] The device can be configured to provide appropriate image magnification, diffraction that limits the image resolution and depth of focus in relation to the magnitude of myopic defocus being applied and the rate of change of image blur or image sharpness gradient as a function of the magnitude of defocus.

[0065] In some embodiments, the near eye display is configured to provide a clear, substantially undistorted field of view of the foveal and macular image for comfortable vision. In some embodiments, the field of view of the central image is at least +/- 5 degrees and can be more (e.g. +/-12 degrees), for example, in order to account for differences in interpupillary distance (IPD) of different users, for example. Image quality and field of view of the real image can be provided with a substantially transparent near eye display transparent, and by reducing the fill factor of light emitting pixels in the micro-display. In some embodiments, a fill factor less than 10% (0.1) is sufficiently sparse to provide a clear view of the foveal and macular image. In some embodiments, the fill factor is in the range of 0.01 to 0.3 and can be within a range from 0.05 to 0.20. For example, an array of pixels of pixel size 5 microns and a pixel pitch of 20 microns will lead to a fill factor of 0.06. A low fill factor may also reduce the complexity of the manufacturing process and reduces the cost of such micro-optic displays.

[0066] In some embodiments, the micro-optic array is designed to be optically aligned with the display, so that light from a single or a plurality of pixels can be collected, collimated and focused to be directed to the pupil of the user at primary gaze. The population density of these micro-optical elements can control the overall visibility of the near eye display. In some embodiments, the micro-optic has a low fill factor (preferably equal to or less than 0.1) so that the overall light transmission through the near eye display will be acceptable to users.

[0067] In some embodiments the device comprises a switchable micro-optic array that can be switched between a plano (no optical power) state and an activated state by electro-optical components, utilizing for example a liquid crystal or a LC based material that can be switched from one refractive index to another, or one polarization to another, for example. In some embodiments, the micro-optic array does not scatter light or distort images of the real world when it is not activated.

[0068] FIGS. 2A and 2B depict a contact lens 10 comprising a plurality of light sources configured to project a defocused image on the retina away from the central field that includes the macula in order to stimulate a change in choroidal thickness. The plurality of light sources can be coupled to one or more optical components to provide a stimulus to the retina as described herein. Although reference is made to a contact lens, the lens 10 may comprise a lens of one or more of a projector, an ophthalmic equipment, a TV screen, a computer screen, an augmented realize display, a virtual reality display, a handheld device such as a smart phone, a wearable device such as a spectacle lens, a near eye display, a head-mounted display, a goggle, a contact lens, a corneal onlay, a corneal inlay, a corneal prosthesis, or an intraocular lens.

[0069] This contact lens 10 comprises a base or carrier contact lens comprising embedded electronics and optics. The base soft contact lens 10 is made of a biocompatible material such as a hydrogel or a silicone hydrogel polymer designed to be comfortable for sustained wear. The contact lens comprises a maximum overall distance across, e.g. a diameter 13. The biocompatible material can encapsulate the components of the soft contact lens 10. In some embodiments, the contact lens 10 has a central optical zone 14 designed to cover the pupil of a user's eye under many illumination conditions. In some embodiments, the optical zone comprises a circular zone defined with a radius 15. In some embodiments, a plurality of projection units 12 is located a distance 17 from a center of the optical zone. Each of the plurality of projection units 12 comprises a distance across 19. In some embodiments, the distances between the projection units are sized to place the projection units outside the optical zone to stimulate a peripheral region of the retina, although the projection units can also be placed inside the optical zone to stimulate the peripheral retina as described herein.

[0070] The optical zone 14 can be appropriately sized for the pupil of the eye and the illumination conditions during treatment. In some embodiments, the optical zone comprises a diameter of 6 mm, for example when the contact lens is configured for use during the day. The optical zone 14 may have a of diameter within a range from 6 mm to

9 mm, for example within a range from 7.0 mm to 8.0 mm. The central optical zone 14 is designed to provide emmetropic correction or other suitable correction to the user and may be provided with both spherical and astigmatic correction. The central optical zone 14 is circumscribed by an outer annular zone, such as a peripheral zone 16 of width in a range 2.5 mm to 3.0 mm. The peripheral zone 16, sometimes referred to as the blend zone is primarily designed to provide a good fit to the cornea, including good centration and minimum decentration. The outer annular zone is surrounded by an outermost edge zone 18 of width in the range from 0.5 mm to1.0 mm. The optical zone 14 is configured to provide refractive correction and can be spherical, toric or multifocal in design, for example with a visual acuity of 20/20 or better. The outer annular zone peripheral to the optical zone 14 is configured to fit the corneal curvature and may comprise rotational stabilization zones for translational and rotational stability, while allowing movement of the contact lens 10 on the eye following blinks. The edge zone 18 may comprise a thickness within a range from 0.05 mm to 0.15 mm and may end in a wedge shape. The overall diameter 13 of the soft contact lens 10 can be within a range from 12.5 mm to 15.0 mm, for example within a range from 13.5 mm to 14.8 mm.

[0071] The contact lens 10 includes a plurality of embedded projection units 12. Each of the plurality of projection units 12 comprises a light source and one or more optics to focus light in front of the retina as described herein. Each of the optics may comprise one or more of a mirror, a plurality of mirrors, a lens, a plurality of lenses, a diffractive optic, a Fresnel lens, a light pipe or a wave guide. The contact lens 10 may comprise a battery 20 and a sensor 22. The contact lens 10 may comprise a flex printed circuit board (PCB) 24, and a processor can be mounted on the flex PCB 24. The processor can be mounted on the PCB 24 and coupled to the sensor 22 and the plurality of light sources 30. The soft contact lens 10 may also comprise wireless communication circuitry and one or more antennae 41 for electronic communication and for inductively charging the battery 20 of the contact lens 10. Although reference is made to a battery 20, the contact lens 10 may comprise any suitable energy storage device.

[0072] The projection units 12 can be configured to provide defocused images to the peripheral portion of the retina as described herein and may include light sources and projection optics. In some embodiments, one or more projection optics are configured with the light sources to project a defocused image from the light sources onto the peripheral retina away from the central visual field that includes the macula in order to stimulate a change in choroidal thickness, such as an increase or decrease in cordial

thickness. The one or more projection units 12 can be configured to stimulate the retina without degrading central vision and corresponding images formed on one or more of the foveal or macular regions of the retina. In some embodiments, the one or more projection optics do not decrease the image forming characteristics of the vision correction optics prescribed to correct refractive errors of the users. This configuration can allow the user to have good visual acuity while receiving therapy from the defocused images as described herein.

[0073] In some embodiments, the light from light sources of the projection units 12 are substantially collimated and focused by one or more projection optics, as described herein. The function of the light sources and the projection optics is to substantially collimate the light emitted by the light sources and direct it at a focus that is designed to be in the front of or behind the retina to provide appropriate defocus to stimulate a change in choroidal thickness. For myopic defocus, the focused images may appear approximately 1.5 mm to 2.5 mm in front of the peripheral retina and myopic by about 2.0D to 5.0D, for example 2.0D to 4.0D, or preferably 2.5D to 3.5D, for example. For hyperopic defocus, he focused images may appear approximately 1.5 mm to 2.5 mm behind of the peripheral retina, in order to be hyperopic by about -2.0D to -5.0D, for example -2.0D to -4.0D, or preferably -2.5D to -3.5D, for example.

[0074] The plurality of stimuli and the clear zone can be arranged to allow eye movements relative to the projection optics and clear zone, which can be well suited for use in embodiments where the eye moves relative to the projection optics, such as spectacle, AR and VR applications. In accordance with some embodiments, light from the projection units may be directed at an oblique angle with respect to an optical axis of the eye in order to enter the pupil while maintaining a clear central vision zone that is substantially larger than the pupil in order to provide a large field of view of the clear zone, e.g. a large eye box. The clear zone can be dimensioned in many ways, and may comprise a circular zone, an oval, a square zone or a rectangular zone. In some embodiments, the eye box may be 5.0 mm by 4.0 mm. In some embodiments, the clear zone comprises an eye box may be 15 mm by 4.0 mm. A larger clear viewing zone, e.g. a larger eye box, allows a greater level of eye movements without the stimulus being blocked by the edge of the pupil, for example when the eye changes direction in gaze and the clear viewing zone defined by the eye box remains stationary. In some embodiments, the oblique angle of projection of the stimulus into the eye depends upon the size of the eye box.

[0075] In accordance with some embodiments, the lens 10 or other suitable optical support structure comprises projection units which include projection optics and micro-displays as the light source. The micro-displays may comprise an OLED (organic light emitting diode) or an array of micro-LEDs. Light emitted by these displays may be Lambertian. In some embodiments, the micro-display is optically coupled to a micro-optical array that substantially collimates and focuses the light emanating from the micro-display. The micro-display may comprise one or more miniaturized pixels. In some embodiments, the micro-display forms an extended array of pixels, characterized by a pixel size and a pixel pitch, in which the pixel size and the pixel pitch together correspond to a fill factor of the micro-display. As described herein, each of the pixels may have a size within a range from about 2 microns to about 100 microns, and the pixel pitch may range from 10 microns to 1.0 mm, for example. The corresponding fill factor can range from 0.1% to 10% or more. In some embodiments where real world viewing is desirable, a smaller fill factor blocks less light from the real environment and provides a greater level of comfort and vision. Alternatively or in combination, a greater fill factor can enhance the overall brightness of the stimulus and may be well suited for applications that do not rely on real word viewing and all-around vision. In some embodiments, the pixel array is optically coupled with a micro-optic array in order to substantially collimate and focus light from the pixels.

[0076] In accordance with some embodiments, the lens 10 or other suitable optical support structure comprises projection units which include projection optics and micro-displays as the light source. The micro-displays may comprise an OLED (organic light emitting diode) or an array of micro-LEDs. Light emitted by these displays may be Lambertian. In some embodiments, the micro-display is optically coupled to a micro-optical array that substantially collimates and focuses the light emanating from the micro-display. The micro-display may comprise one or more miniaturized pixels. In some embodiments, the micro-display forms an extended array of pixels, characterized by a pixel size and a pixel pitch, in which the pixel size and the pixel pitch together correspond to a fill factor of the micro-display. As described herein, each of the pixels may have a size within a range from about 2 microns to about 100 microns, and the pixel pitch may range from 10 microns to 1.0 mm, for example. The corresponding fill factor can range from 0.1% to 10%. In some embodiments, the pixel array is optically coupled with a micro-optic array in order to substantially collimate and focus light from the pixels.

[0077] The images created by these displays is defocused and may be placed symmetrically in four quadrants of the field of view or of the eye (e.g. nasal-inferior, nasal-superior, temporal-inferior and temporal-superior). The micro displays can be located away from the optical center of the lens by a distance within a range from 1.5 mm to 4.0 mm, preferably 2.5 mm to 3.5 mm. The central optic of the contact lens can be selected to bring the user to emmetropia, and may have a diameter within a range 3.0 to 5.0 mm. Each micro-display may be circular, rectangular or arcuate in shape and have an area within a range from 0.01 mm2 to 8.0 mm2, for example within a range from 0.04 mm2 to 8.0 mm2, for example within a range from 1 mm2 to 8 mm2, or preferably within a range from 1.0 mm2 to 4.0 mm2, in some embodiments.

[0078] The micro-display can be coupled to and supported with the body of the correction optic such as a contact lens, or a spectacle lens, an augmented reality ("AR") headset, or a virtual reality ("VR") headset for example. In some embodiments, the micro-displays are coupled to and supported with one or more of an intraocular lens, a corneal prosthesis, a corneal onlay, or a corneal inlay. The optical configurations described herein with reference to a contact lens can be similarly used with one or more of an intraocular lens, a corneal prosthesis, a corneal onlay, or a corneal inlay, for example.

[0079] In some embodiments, the micro-displays and the micro-optic arrays are mounted immediately adjacent to each other on the same correction optic, separated by a fixed distance in order to project a bundle of rays to the pupil of the eye, at an orientation that it forms a defocused image at a desired location on the retina as described herein. In some embodiments, the one or more projection optics are mounted on or in the one or more correction optics, such that rays from the projection optics are refracted through the correction optics. The correction optics refract the rays from the projection optics to be convergent or divergent as helpful for clear vision, so that the micro-optical array can provide the desired magnitude of additional power that may be plus or minus, depending on the magnitude and sign of the defocus desired. The micro-display may be monochromatic or polychromatic, for example.

[0080] In some embodiments, the projected defocused image can be provided by a micro-display comprising a screen comprising one or more of an LCD screen, a screen driven by OLEDS (organic light emitting diodes), TOLEDS, AMOLEDS, PMOLEDS, or QLEDS.

[0081] FIG. 3 shows system diagram of the function of the components of a retinal stimulation device, such as a lens 10 as in FIGS. 1A to 2B. These components can be supported with the PCB 24. For example, the power source, such as a battery 20, can be mounted on the PCB 24 and coupled to other components to provide a power source function 21. The sensor 22 can be configured to provide an activation function 23. The sensor 22 can be coupled to a processor mounted on the PCB 24 to provide a control function 25 of the lens 10. The control function 25 may comprise a light intensity setting 27 and a light switch 29. The processor can be configured to detect signal from the sensor 22 corresponding to an increase in intensity, a decrease in intensity, or an on/off signal from the sensor 22, for example with a coded sequence of signals from the sensor 22. The processor is coupled to the light projection units 18 which can comprise a light source 30 and optics 32 to provide the projection function 31. For example, the processor can be coupled to the plurality of light sources 30 (e.g. projection units 12 or one or more displays 72) to control each of the light sources 30 in response to user input to the sensor 22.

[0082] The retinal stimulation device may comprise global positioning system (GPS) circuitry for determining the location of the user, and an accelerometer to measure body movement, such as head movement. The retinal stimulation device may comprise a processor coupled to one or more of the GPS or the accelerometer to receive and store measured data. In some embodiments, the GPS along with a local clock (clock keeping local time) are used by a processor to compute the occurrence of diurnal variations in axial length of the eye of the wearer. In some embodiments, application of the stimulus may be made to coincide with the occurrence of maximum axial length under diurnal variations. The retinal stimulation device may comprise communication circuitry, such as wireless communication circuitry, e.g. Bluetooth or WIFI, or wired communication circuitry, e.g. a USB, in order to transmit data from the device to a remote server, such as a cloud-based data storage system. This transmission of data to the remote server can allow the treatment and compliance of the user to be monitored remotely. In some embodiments, the processor comprises a graphics processing unit (GPU). The GPU can be used to efficiently and rapidly process content from the web in order to utilize this content in forming the stimulus as described herein.

[0083] The methods and apparatus for retinal stimulation as described herein can be configured in many ways and may comprise one or more attributes to encourage a user to receive therapy. For example, the retinal stimulation as described herein can be

combined with a display of a game to encourage a user to wear the treatment device. In some embodiments, the retinal stimulation can be combined with another stimulus, such as an emoji, to encourage a user to wear the device for treatment. The components of the system may communicate with or receive information from a game or other stimulus to facilitate the retinal stimulation with the game or stimulus.

[0084] Additional examples of suitable optical configurations and components to project the stimulus such as light pipes, reflectors and mirrors, suitable for incorporation in accordance with the present disclosure are described in PCT/US2019/043692, filed on July 26, 2019, entitled "ELECTRONIC CONTACT LENS TO DECREASE MYOPIA PROGRESSION", published as WO2020028177A1 on February 6, 2020; and PCT/US2020/044571, filed July on 31, 2021, entitled" DEVICE FOR PROJECTING IMAGES ON THE RETINA", published as WO/2021/022193 on February 4, 2021, the entire disclosures of which have been previously incorporated herein by reference.

[0085] FIG. 4 shows a lens such as a contact lens or spectacle comprising an inner zone to provide clear vision and an outer zone to provide defocus to treat refractive error. The lens 400 comprises a clear inner zone 410, e.g. a clear central zone, configured to provide clear vision to the eye of the wearer, and an outer zone 420 configured to focus images anterior to the retina. In some embodiments, the inner zone 410 comprises a center 412 of lens 400 The inner zone 410 may comprise one or more of a far vision correction, a near vision correction, an intermediate correction, or a progressive addition correction for example. The outer zone 420 may comprise any suitable optical structure to focus images in front of the retina and may comprise an annular zone extending around the clear zone 410. The lens 400 may comprise any suitable lens material, such as glass, plastic, or polycarbonate, for example. In some embodiments, the inner zone 410 comprises optical power to correct a refractive error of the eye, in which the optical power is provided by one or more of curvature of the lens 400, diffractive structure such as echelletes, or refractive structures such as Fresnel lenses. In some embodiments, the outer zone 420 comprises optical power greater than clear zone 410 to focus images anterior to the retina to treat a progression of refractive error of the eye.

[0086] In some embodiments, the outer zone 420 comprises one or more optical structures to focus an image of a stimulus to a location anterior or posterior to the retina at a location away from the retina to provide a provide a blurred image of the stimulus at the retina at a location away from the fovea. The one or more optical structures comprises one or more of a lens, a prism, a wedge, a flat, a diffractive optic, a Fresnel lens, a

plurality of echelletes, an aspheric profile a liquid crystal, a plurality of lenslets, a plurality of regions of positive optical power, a plurality of annular regions of increased optical or a plurality of gaps extending between regions of increased optical power.

[0087] In some embodiments, the one or more optical structures comprises a first optical structure to provide the first stimulus and a second optical structure to provide the second stimulus, the second optical structure configured in response to the comparison of optical properties of the eye before and after treatment as described herein. In some embodiments, the second optical structure is configured with one or more of a focal length, a tilt angle, a diffractive pattern, an echelletes pattern, an aspheric profile, a liquid crystal index change, locations of regions of positive optical power, or gaps in response to the comparison. Examples of suitable liquid crystal materials and optical properties are described in the following patent applications: PCT/US2021/036102, filed on June 7, 2021, entitled "STICK ON DEVICES USING PERIPHERAL DEFOCUS TO TREAT PROGRESSIVE REFRACTIVE ERROR"; and PCT/US2021/032162, filed May 13, 2021, entitled "ELECTRO-SWITCHABLE SPECTACLES FOR MYOPIA TREATMENT", the full disclosures of which have been previously incorporated herein by reference.

[0088] The clear zone 410 can be sized in any suitable way to treat the progression of refractive error of the eye and provide clear viewing. In some embodiments, clear zone comprises radii corresponding to 10 to 15 degrees at the distance of the clear zone from the pupil and may comprise dimensions within a range from about 7 mm to about 12 mm, on a spectacle for example.

[0089] The outer zone 420 may comprise an optical structure to provide increased optical power can be configured in any suitable way to provide increased optical power, and may comprise one or more of curvature, an aspheric profile, diffractive structures such as echelletes, or refractive structures such as Fresnel lenses. In some embodiments, the outer zone 420 comprises a stick-on layer to provide additional refractive power. In some embodiments, clear inner zone 410 is defined by an aperture formed in a stick-on layer of outer zone 420. For example, the outer layer may comprise a layer of lens material configured to provide additional optical power such as Fresnel "press-on" lenses commercially available from 3M Health Care. The amount of additional power in zone 420 may comprise any suitable amount for power, for example a spherical optical power within a range from about +2D to about +6D.

[0090] Although reference is made to outer zone 420 comprising a stick-on layer, any suitable structures can be used to provide near focus, such as structures used in commercially available lenses.

[0091] FIG. 5 shows lens 400 in which outer zone 420 comprises a plurality of lenslets 430. The plurality of lenslets 430 may comprise any suitable optical power to focus the image anterior to the retina. The lenslets may comprise an optical power within a range from about +2 D to about +6D for example. In some embodiments, one or more gaps 432 that extend between the lenslets and the optical power of the lens where the gaps extend. The size and spacing of the gaps can be configured such that the lenslets comprise a portion of outer zone 420 and an appropriate percentage of zone 420 in order to provide an appropriate ratio of near vision correction and stimulus for the outer zone.

[0092] FIG. 6 shows a lens 400, in which the outer zone 420 comprises a plurality of separated positive zones 440 to focus light from outer zone 420 anterior to the retina. The plurality of positive zones 440 may comprise any suitable optical power to focus the image anterior to the retina. The positive zones 440 may comprise an optical power within a range from about +2 D to about +6D for example. In some embodiments, one or more gaps 442 extend between the positive zones. The optical power of the lens where the gaps extend is similar to the optical power of the zone 410. The size and spacing of the gaps can be configured such that the positive zones 440 comprise a portion of outer zone 420 and an appropriate percentage of zone 420 in order to provide an appropriate ratio of near vision correction and stimulus for the outer zone.

[0093] The optical power of zone 420 can be adjusted in response to the treatment as described herein. Alternatively or in a combination, a percentage area of coverage of the positive optical structures of zone 420, e.g. lenslets 430, can be adjusted in response to treatment as described herein. The size of the central clear zone can also be adjusted in response to treatment, for example. In some embodiments, the optical power of the optical structures of zone 420 can be reversed in response to treatment, in order to project images behind the retina, for example.

[0094] The lens 400 can be configured in many ways to provide treatment as described herein. In some embodiments, lens 400 provides viewing of a natural scene, for example when the lens is worn during normal daily use. Alternatively or in combination, the lens 700 can be used with an artificial light source, such as a display, in order to provide a plurality of stimuli to the retina as described herein. Also, while reference is made to lens

400, the lens 400 may comprise no effective optical power, for example with similarly curved front and back surfaces.

[0095] Although reference is made to a lens in FIGS. 4 to 6, the optical structures such as the clear zone 410 and outer zone 420 can be combined with any suitable optical structure, such as an optically transmissive substrate, a flat, a wedge, a prism, a mirror or a beam splitter for example with AR and VR devices as described herein. In some embodiments, treatment is provided while a user views a display with clear zone 410 and outer zone 420. Also, while reference is made to focusing the plurality of stimuli anterior to the retina, in some embodiments the optical structures of the zone 420 are configured to focus the plurality of stimuli posterior to the retina while the central zone 410 focus images on the retina, for example with similar amounts of defocus.

[0096] FIG. 7 shows a plurality of stimuli 702 and an image 704 on a display 706 as seen by a user. The stimuli 702 are located around a display 706, in which the display corresponds to a region of clear central vision, and the stimuli correspond to peripheral vision of the user, for example vision outside the macula. The plurality of stimuli can be imaged anterior to the retina with a myopic defocus, so as to provide a stimulus to increase choroidal thickness and decrease growth in the axial length of the eye.

[0097] The stimuli can be configured in many ways as described herein. In some embodiments, the stimuli comprise a light pattern 708 on a dark background 710, e.g. a black and white pattern. In some embodiments, the stimuli comprise a polychromatic pattern on a darker background, such as a white or nearly white stimulus on a gray background or substantially black background. In some embodiments, each of the stimuli comprises a dark inner region and one or more light outer regions on a dark background, e.g. a dark cross through a white circular region a dark background. Stimuli may be selected based on their global contrast factor, their polarity (e.g., white or polychromatic on black background, versus, black on white or polychromatic background). The stimuli can be configured in many ways and may comprise a plurality of repeated icons shown on a display. The stimuli may be arranged in a circular or annular pattern of repeated icons. The stimuli may comprise any suitable global contrast factor, such as a global contrast factor of at least 0.5, at least 0.7, or at least 0.8, for example.

[0098] FIG. 8A shows stimuli 702 on a screen 800 to provide myopically defocused stimuli to the retina, and FIG. 8B shows the corresponding dimensions of the myopically defocused stimuli on the retina in degrees. The size of the stimuli on the display is related to the distance between the user and the display, and the dimensions can be changed in

accordance with the viewing distance to provide an appropriate angular subtense to the retina. One of ordinary skill in the art can readily perform calculations to determine the size of the stimuli on the display to provide appropriate angular sizing of the defocused projected images.

[0099] As shown in FIGs. 8A and 8B, each of the stimuli comprises a distance across 802, e.g. 18 mm, corresponding to an angular illumination 812 on the retina, e.g. 3.3 degrees. The stimuli are arranged on the display to provide a clear central field of view 804 having a distance across 806, for example 70 mm across, so as to provide an undisrupted central field of view 804 having a distance across 814 of 15 degrees. The plurality of stimuli comprises a maximum distance across 815, e.g. 178 mm, which corresponds to an angular subtense 816 of 35 degrees. The stimuli can be arranged with any appropriate object size in order to provide appropriate image size on the retina. Although reference is made to specific dimensions, any suitable dimensions can be used, for example by varying the distance to the eye and corresponding angular subtense. In some embodiments, the stimuli are arranged to provide a clear central field of view, for example 15 mm across, so as to provide an undisrupted central field of view of 15 degrees. In some embodiments, the plurality of stimuli comprises a maximum distance across, e.g. 70 mm, which corresponds to an angular subtense of 35 degrees.

[0100] FIG. 9 shows a stimulus 702 depicting a natural scene 900, such as an annular flower pattern. Although a flower pattern is shown, any image can be used. The stimulus can be provided on a display alternatively or in combination with the stimulus 702 shown in FIGs. 8A and 8B, for example. The dimensions and angles of the stimulus shown in FIG. 9 can be dimensioned similarly to the stimulus shown in FIGS. 8A and 8B. For the central field of view 814 shown as a dark circle may comprise a distance across, for example corresponding to about 15 degrees, and the maximum distance 806 across the annular region can be about 35 degrees, for example. Work in relation to the present disclosure suggests that a polychromatic natural scene, such as a flower pattern may be more pleasant for the user. Work in relation to the present disclosure also suggests that in some embodiments, the polychromatic flower scene may be less effective as a stimulus than an annular array of white circles on a black background with a black cross segmenting the circular icon, although other stimuli may be used.

[0101] FIG. 10 shows image contrast and a histogram with red (R), blue (B) and green (G) values for the stimuli shown in FIGS. 8A to 9. For the circle pattern as shown in FIGs. 9A and 9B, the histogram shows a pixel count of approximately 3.5×10^5 stimuli

pixels with an intensity value of approximately 255. Black pixels have been excluded in histogram to increase clarity of graphical representation (Intensity=0). For the flower pattern shown in FIG. 9, the blue intensity distribution shows an intensity peak at about 50, a red peak at about 110 and a green peak at about 120, in which the counts are below 0.5×10^5.

[0102] In some embodiments, contrast is defined as separation between the lowest and the highest intensity of the image. The Global Contrast factor (GCF) can also be used to define the contrast of the stimulus images. The GCF measures the richness of details as perceived by a human observer. In some embodiments, the GCF of the stimulus is determined as described in *Global contrast factor-a new approach to image contrast'* Matkovic, Kresimir et al., 2005; Computational Aesthetics in Graphics, Visualization and Imaging (2005); L. Neumann, M. Sbert, B. Gooch, W. Purgathofer (Editors).

[0103] The GCF values obtained are as follows:

[0104] Flower : 6.46

[0105] Circle pattern (b/w) : 9.94

[0106] Work in relation to the present disclosure suggests that white Circles on black background may be preferred over flowers in a field because of higher GCF.

[0107] FIG. 11 shows an image 1100 suitable for modification and incorporation as a stimulus as described herein. The image 1100 may comprise a processed image to provide a suitable spatial frequency distribution as described herein. The image may comprise a natural image or a computer-generated image. The image can be masked so as to define an annular stimulus, e.g. similar to FIG. 9. FIG. 12 shows an image 1200 similar to the image of FIG. 11 that has been processed to provide an improved stimulus. This processed image can be masked digitally to form an annular stimulus as shown in FIG. 9, with appropriate spatial frequencies and contrast.

[0108] While the image can be processed in many ways, in some embodiments an image is processed with a digital spatial frequency filter and the contrast adjusted so as to provide an image with an appropriate spatial frequency distribution to generate an improved response of the eye. At a step in the process, the image is processed with a moving average filter having a length, for example a filter with a 400 pixel length. At another step, the RGB image is converted to a Grayscale image. At another step, the RGB image is adjusted according to the moving average image. At yet another step, the moving average filter is reapplied to the new image. In some embodiments, the moving

average of the brightness is smoothed. For example, the initial image may have 100% difference in brightness, and the adjusted image has a 25 % difference in brightness.

[0109] FIG. 13 shows an image of spatial frequencies distributions of the image of FIG. 11.

[0110] FIG. 14 shows an image of spatial frequencies distributions of the image of FIG. 12, which can be used as the stimulus in FIG. 9.

[0111] FIG. 15 shows a plot of image spatial frequency in cycles per degree and the log of the energy at each frequency for the stimulus images shown in FIGS. 8B and 9. In the plot shown in FIG. 15, the average radial profile of the spatial frequency spectrum is shown, in which the amplitude log (arbitrary units, "au") is related to number density of features for a particular spatial frequency. For reference, this plot shows the 1/f, $1/f^2$ and $1/f^{0.5}$ lines. The processed image comprising flower pattern with a circle shown in FIG. 9 has a similar frequency dependence to the white circle pattern with black crosses shown in FIGS. 7 to 8B. These plots show that the flower pattern and circle pattern both exhibit approximately 1/f slope dependencies at intermediate (e.g. mid-range) frequencies from about 2 to 10 cycles per degree. In some embodiments, the stimulus comprises a variation in intensity (energy, au) with a frequency dependence within a range from 1/f to $1/f^2$ frequency dependency for frequencies within a range from about 2 to 10 cycles per degree.

[0112] The stimulus can be configured in many ways with appropriate spatial frequency distributions, for example with a profile of spatial frequency distributions. In some embodiments, each of the plurality of stimuli comprises a length, edges, and an intensity profile distribution to generate spatial frequencies in a range of $1X10^{-1}$ to $2.5X10^{1}$ cycles per degree as imaged into the eye anterior or posterior to the retina and optionally within a range from $1X10^{-1}$ to $1X10^{1}$ cycles per degree. In some embodiments, the plurality of stimuli as imaged in the eye comprises a spatial frequency distribution providing a decrease in spatial frequency amplitude with an increase in spatial frequency for a range of spatial frequencies from about $1X10^{-1}$ to about $5X10^{0}$ cycles per degree. In some embodiments, the decrease in spatial frequency intensity is within a range from 1/(spatial frequency) to $1/(\text{spatial frequency})^2$ for the spatial frequency amplitude in arbitrary units. In some embodiments, the range of spatial frequencies is from about $3X10^{-1}$ to about $1.0X10^{1}$ cycles per degree and an optionally within a range from about $3X10^{-1}$ to about $2.0X10^{0}$ and further optionally within a range from about $3X10^{-1}$ to about $1.0X10^{0}$.

[0113] Alternatively or in combination with the spatial frequency properties, the stimulus can be configured with an appropriate ratio of stimulus intensity to background intensity. In some embodiments, a brightness of the plurality of defocused stimuli images is higher than a brightness of ambient illumination by a factor of at least 3 times the brightness of ambient illumination, optionally at least 5 times the brightness of background illumination, optionally within a range from 3 to 20 times the brightness of background illumination and further optionally within a range from 5 to 15 times the brightness of background illumination.

[0114] In some embodiments, the stimuli comprising the spatial frequency and intensity properties are presented with an appropriate ratio to one or more of background illumination or ambient illumination. In some embodiments, each of the plurality of stimuli as imaged in the eye is overlaid onto a substantially uniform grey background. In some embodiments, each of the plurality of stimuli comprises a polychromatic icon, e.g. a white icon, on a darker background to provide contrast, such that the icons have an edge profile or a total length of edges that generates features of spatial frequency predominantly in a range from $1X10^{-1}$ cycles per degree to $2.5X10^{1}$ cycles per degree, and optionally within a range from $1X10^{-1}$ cycles per degree to $1X10^{1}$ cycles per degree.

[0115] Additional examples of stimuli and associated properties suitable for incorporation in accordance with the present disclosure are described in PCT/US2021/036100, filed on June 7, 2021, entitled "PROJECTION OF DEFOCUSED IMAGES ON THE PERIPHERAL RETINA TO TREAT REFRACTIVE ERROR, the entire disclosure of which has been previously incorporated by reference.

[0116] FIG. 16 shows a system 1600 for treating refractive error of the eye. The system 1600 comprises a treatment device 1602, such as a user device operatively coupled to a server 1604 with a secure bi-directional communication protocol. The server 1604 is configured to communicate with a treatment professional device 1608 with a secure bidirectional communication protocol 1606. In some embodiments, the server 1608 is coupled to a caregiver device 1610 with a secure bidirectional communication protocol 1606. In some embodiments, the system 1600 comprises a treatment database 1612, which stores treatment parameters and results from a plurality of treatments. The treatment database 1602 can be configured to communicate with the server 1604 with secure bidirectional communication protocol 1606. In some embodiments, the treatment system 1600 comprises one or more clinical measurement devices 1614 configured to communicate with the server with a secure bidirectional communication protocol 1606.

Each of the devices can be operatively coupled to another device with the secure bidirectional communication protocol 1606. The secure communication may comprise any suitable secure communication protocol that transmits encrypted data, and the data can be stored in any suitable encrypted format. The devices shown in FIG. 16 can be configured to comply with HIPAA and GDPR, for example, as will be appreciated by one of ordinary skill in the art. The server 1604 may comprise any suitable server such as a cloud-based server comprising a plurality of servers, which can be at different geographic locations. The treatment database 1612 may comprise a component of the server, although it is shown separately.

[0117] The treatment device 1602 can be configured in many ways as described herein, and may comprise a user device comprising one or more of an ophthalmic device, a TV screen, a computer screen, a virtual reality ("VR") display, an augmented reality ("AR") display, a handheld, a mobile computing device, a tablet computing device, a smart phone, a wearable device, a spectacle lens frame, a spectacle lens, a near eye display, a head-mounted display, a goggle, a contact lens, an implantable device, a corneal onlay, a corneal inlay, a corneal prosthesis, or an intraocular lens. For example, the treatment device 1602 may comprise an optical system with beam splitters as described herein. In some embodiments, the treatment device 1602 comprises a user device, such as a smart phone or tablet, for example. The display 1620 of the user device can be configured to provide a plurality of stimuli 702 as described herein. In some embodiments, the user device 1602 comprises a lenslet array 1622 placed over the plurality of stimuli 702, so as to provide an image of the stimuli 702 anterior or posterior to the retina as described herein. In some embodiments, each lenslet of the lenslet array is aligned with one of the plurality of stimuli. The user device can be configured with a clear viewing area 604 as described herein, for example without the lenslet array extending into the clear viewing area. The clear viewing area 604 can be configured for the user to view images, such as videos and allow the user to use the device in a substantially normal manner, for example so as to use a web browser, play video games, send and receive texts and emails, etc. The lenslet array 1622 can be positioned at a distance from the pixels so as to provide an appropriate amount of defocus as described herein. In some embodiments, the treatment system 1600 comprises one or more clinical measurement devices 1614.

[0118] The treatment professional device 1608 can be configured for the treatment professional to receive data from the user device 1602, such as treatment data. The

treatment data may comprise any suitable treatment data, such as duration of treatment each day, daily use, screen time, screen time with the stimuli activated. The treatment professional device 1608, can also be configured to send and receive data from ophthalmic instruments, such as refraction data as described herein, in order to evaluate the efficacy of treatment. The treatment professional device 1608 can be configured to transmit treatment instructions to the user device 1602. The treatment instructions may comprise any suitable parameter as described herein and may comprise a duration of and a time for treatment, for example. Work in relation to the present disclosure suggests that circadian rhythms may play a role in the efficacy of treatment, and the treatment instruction may comprise instructions for the user to perform the treatment at a time of day or a range of times, for example in the morning, for example at a time where the subject is located within a range from about 6 am to about 9 am local time.

[0119] The clinical measurement device 1614 may comprise any suitable clinical measurement device, such as one or more of an autorefractor or an OCT system, for example. Alternatively or in combination, the subject records such as manifest refraction can be stored at the clinical site and transmitted to the server.

[0120] The caregiver device 1610, may comprise any suitable device with a display, such as a smartphone or table. The caregiver device 1610 can be configured to transmit and receive data related to the treatment of the user. The caregiver device 1610 can be configured for a caregiver, such as a parent to monitor the treatment and promote compliance with a treatment protocol. For example, the server 1604 can be configured transmit notifications to the caregiver device 1610, such as notifications that the user is scheduled for treatment and the caregiver can interact with the user to encourage the user to receive treatment.

[0121] The treatment database 1612 can be configured to store data related to treatment. The data related to treatment may comprise treatment data and efficacy data, for example. The efficacy data may comprise one or more of refractive data and axial length data. The refractive data may comprise refractive data of the eyes of the user, e.g. sphere, cylinder and axis, at points in time, e.g. longitudinal data. The axial length data may comprise data such as OCT data collected at points in time. The treatment data 1612 may comprise data related to stimulus parameters as described herein, and may comprise duration of treatment at each day, intensity of stimulus, type of stimulus and defocus data, for example.

[0122] In some embodiments, algorithms such as artificial intelligence, machine learning, neural networks or convolutional neural networks are used to process the data to determined improved treatment parameters, such as duration of treatment, time of day of treatment, defocus, shape and intensity of the stimulus, amount of defocus, spatial frequencies of stimulus, ratio of stimulus to ambient light, background of stimulus, or any other parameter related to treatment. These parameters can be adjusted to provide improved treatment and can be suggested to the treatment professional on the treatment professional device for the treatment professional to push the instructions to the user device.

[0123] While the treatment device 1602 such as the user device can be configured in many ways, in some embodiments the device 1602 comprises a sensor 1624 to detect one or more of luminosity or spectral data, such as a luminance sensor or a spectrophotometer. The sensor 1624 can be configured to measure and detect environmental light exposure of the subject such as a wearer or user, and the ambient light may comprise ambient light measured with the sensor 1624. In some embodiments, the sensor is supported, e.g. mounted, on the treatment device as described herein, such as spectacles, a wearable device, or a user device.

[0124] The system of FIG. 16 is well suited for use with clinical trials to perform the clinical trial and generate efficacy data, for example.

[0125] EXPERIMENTAL

[0126] FIG. 17 depicts an optical system 1700 to project stimuli 702 onto the retina 33. In the studies conducted, the system 1700 comprised a bench top system. Although reference is made to optical system 1700 in the context of an experimental system, the system 1700 can be readily configured to conduct treatments such as the treatment of both eyes in accordance with the present disclosure. The system is configured to receive a left eye and a right eye of the subject for testing purposes. The test eye 1702 is placed in front of a first beam splitter 1706 and the control eye 1704 is placed in front of a second beam splitter 1708. The test eye 1702 and control eye 1704 are allowed to similarly view a central display 1710 in front of a passive background 1712. The display 1710 may comprise a clear central vision zone and show suitable content and may comprise a computer screen. In some embodiments, the central zone vision comprises an entertainment region as seen by the subject though the clear central vision zone with entertainment shown on the display. The active stimulation system comprises a table mounted device with head or chin rest. The system is configured to provide a

background image at optical infinity for both eyes, and a video for central (foveal) vision. A stimulus 502 is shown on a display 1720 placed in front of a lens 1722 (e.g. an achromatic lens) to provide an overlaid stimulus image with a myopic defocus to the test eye. The myopic stimulus is projected anterior to the retina of the eye. The distance of the displayed stimulus from the lens 1722 and optical power of the lens 1722 are configured to provide an appropriate amount of defocus. The stimulus 502 is overlaid with the central display 1710 and passive background 1712 with the first beam splitter 1706. The second beam splitter 1708 is similar to the first beam splitter and background light blocked with an occlude 1724. The beam splitters comprised a reflectance and transmittance ratio of 50/50 for each eye, so as to transmit 50% of the light and to coupling 50% to the stimulus. The stimulus was provided on a screen, such as display 1720, at an appropriate distance from the achromatic lens.

[0127] The following parameters were adjusted as described herein, including, the magnitude of defocus, the coverage of the stimulus on the retina, e.g. the retinal image shell, dominance over the background image, e.g. contrast and brightness, and chromaticity, e.g. wavelength distribution.

[0128] Background patterns were also considered in these experiments. The background pattern may comprise a uniform pattern 1730a or a patterned background 1730b, e.g. a grid pattern. The background pattern was projected onto the peripheral retina with hyperopic defocus. In some embodiments, this hyperopic defocus is provided in order to push the point of focus of distant objects to optical infinity rather than the hyperfocal point. Work in relation to the present disclosure suggests that a patterned background may compete with the myopically defocused stimulus, and that a uniform background pattern may be preferred, in accordance with some embodiments. While the background can be presented in many ways, the background was presented as a poster with an appropriate test pattern.

[0129] A camera 1726 can be used to observe one or more of the eyes. In the experiments conducted, the right eye was the test eye 1702, and the control eye 1704 was the left eye. Although FIG. 8 shows the left eye as the test eye and the right eye as the control eye, this can be readily changed by coupling the achromatic lens and display to the right eye and providing the occluder to the left eye. For example, the positions of the display with the stimulus pattern and the achromatic lens can be placed on the right side, and the occluder moved to the left side.

[0130] A clinical study was successfully conducted in which transient changes were measured on subjects. These subjects were myopic and had been diagnosed with progressing myopia. They were then provided with similar active stimulation on a daily basis for a similar period approximately every day (4-6 days per week) to measure transient changes axial length and refraction for a period of four months. Axial length and refraction were measured on all subjects once a month. The measurements were monocular, using the contralateral eye as control. It was found that the subjects experienced a long term (4 months) change in refraction of the test eye relative to the control eye, and a long-term change in the axial length of the test eye relative to the control eye. This correlation was established between transient data and long term (4 months) data on the refractive status of the test eye upon long term stimulation, applied regularly.

[0131] The optical test apparatus comprised a Non-Wearable Augmented Reality ("ANWAR") apparatus as described herein, for example with reference to FIGS. 7 to 8B and 17. The apparatus comprised 2 partially reflecting mirrors for both eyes, an achromatic lens (aberration minimizing lens), a viewing aperture, a chinrest, and a headrest for the purpose of delivering precise optical vergence. The chinrest and headrest were designed to be comfortable for subjects using replaceable latex-free dressings. The stimulus for peripheral myopic defocus was provided by a monitor projecting an image onto an aberration-minimizing achromatic lens, which refracts the stimulus image, and then reflected by the mirror into the peripheral retina. The stimuli started from 7.5° of retinal eccentricity, moving outwards to partially defocus the peripheral visual field of the right eye as described herein, for example with reference to FIG. 8B. The left eye served as a control for all the conditions and did not receive exposure to the projected light stimuli. The clear viewing image for the central 15° diameter came from a television screen, which acted as a central target and was adjusted for brightness. The two partially reflecting mirrors reflected light from the television screen in both eyes similarly. There was an evenly illuminated grey poster without any pattern surrounding the 15° central target zone (TV monitor). The poster served as an additional background stimulus past the 15° diameter in the visual field for both the control and test eye

[0132] The stimuli were arranged substantially as described with reference to FIGS. 7 to 8b and projected in the periphery using this bi-ocular device. A black and white stimulus was used to produce high contrast images. Additionally, the system allowed control of the brightness and luminance of 1) projected myopic defocus LED lights, 2)

television monitor, and 3) the grey poster background. The test luminance conditions of the projected defocus stimulus were approximately 20 times greater as compared to the luminance of the grey poster background.

[0133] Refractions were measured with a commercially available WAM binocular open field autorefractor, and a commercially available Nidek autorefractor. Axial length and choroidal thickness were measured with a Haag-Streit Lenstar APS optical coherence tomography measurement system.

[0134] **Description of the controlled conditions during defocus sessions**

[0135] Since the choroid is an extremely vascularized layer of the retina that may be responsive to minor movements, the head and body movements of the subjects were limited during defocus sessions and data collection.

[0136] To minimize and capture the natural, diurnal, and intrinsic variability of the choroid over time, both eyes were fully corrected for distance. The projected peripheral defocus was applied to the right eye only and the left eye served as a control. The ambient light levels were maintained at moderate photopic (naturalistic) levels during the testing period. The subjects were seated comfortably and instructed to watch television using a color monitor display approximately 4 meters away. The subjects kept their physical movements to a minimum during the defocus sessions.

[0137] **Statistical Methods**

[0138] The mean of the repeated measurements of spherical equivalent refractive error and axial length obtained from each eye at each visit was used in determining the primary outcome measure (outlined in next section). Generalized linear modeling was used to assess the relationship between cumulative difference and study visit. The model was constructed to assume a linear relationship with y-intercept at zero (i.e. no treatment difference at baseline visit). This methodology allows for control of the inherent correlation between measurements obtained from the same study subject. Initial models investigated the linear relationship within each individual subject with a final model to determine the composite effect using all subjects in one model.

[0139] **Results**

[0140] Table 1: Demographic characteristics and post-treatment cycloplegic refraction endpoints after defocus sessions using ANWAR optical apparatus for enrolled subjects (n=7).

Subject #	4	62	63	66	67	69	70
Age	24	21	29	32	24	28	22
Gender	F	M	F	F	F	F	M
Progressing	Yes	No	Yes	Yes	Yes	Yes	Yes
Defocus Sessions	56	77	79	79	80	77	76
Total Hours of Defocus	84	115.5	118.5	118.5	120	115.5	114
Sphere (OD)	-1.25	-2	-1.25	-1.5	-5.25	-10.25	-5
Cyl (OD)	-0.25	0	-0.75	0	-0.5	0	-1.25
Sph Eq (OD)	-1.375	-2	-1.625	-1.5	-5.5	-10.25	-5.625
Sphere (OS)	-1.25	-1.75	-1.5	-1.5	-3.75	-7.5	-4.75
Cyl (OS)	0	0	-1	0	-0.5	0	-0.5
Sph Eq (OS)	-1.25	-1.75	-2	-1.5	-4	-7.5	-5

[0141] To understand the statistical approach, we can review the calculation of adjusted treatment effect and cumulative adjusted treatment effect. If we assume that treatment (light exposure) is only given to the right eye, then any changes seen in the control eye would be due to natural fluctuations in that eye or, perhaps, myopia progression. Any between-eye difference at the baseline visit is a result of anisometropia and must be considered when examining treatment effect. Thus, the treatment effect at visit i (i = 2, 3, or 4 months) is the observed between-eye difference at that visit minus the level of anisometropia at the baseline visit. As an example, the table below contains the mean spherical equivalent refractive error at each study visit for ID 66. At baseline, the test eye is slightly more myopic with a between-eye difference of -0.096D. This was reversed at the 1-month visit with the test eye now 0.428D less myopic. The adjusted difference is therefore 0.428D – (-0.096D) = 0.524D. These calculations are continued at each study visit. The cumulative difference for month 2 is defined as cumulative difference of month 1 *plus* adjusted difference of month 2.

Study visit	**SPHEQ (OD; test eye)**	**SPHEQ (OS; control eye)**	**Between-eye difference**	**Adjusted difference**	**Cumulative adjusted difference**
Baseline	-0.9185	-0.8230	-0.096	0	0
1 month	-0.85	-1.278	0.428	0.524	0.524
2 month	-0.8855	-0.9455	0.060	0.156	0.6795
3 month	-1.0965	-1.1935	0.097	0.193	0.872
4 month	-0.80	-0.6595	-0.141	-0.045	0.827

[0142] Table 2: Spherical equivalent refractive error at each study visit for ID 66 along with adjusted treatment effect and cumulative adjusted treatment effect.

[0143] This approach considers the small changes seen during each visit and is not biased towards any direction (i.e. positive or negative changes). Given the relative unknown nature of yoke effects of the presented stimulus, a trend analysis rather than an individual data-point provides better guidance as to whether the treatment is having an effect or not. Cumulative effect, as opposed to percentage change, was selected as the later can result in very misleading findings. Additionally, cumulative change is commonly used to express treatment efficacy.

[0144] ***Analysis 1: Spherical equivalent refractive error obtained from WAM in straight ahead gaze***

ID	Slope	p-value[a]
04	-0.015	.049
62	0.055	.013
63	0.216	.004
66	0.195	<.001
67	-0.117	.004
69	-0.027	.079
70	0.043	.007

[a] P-value from regression model testing hypothesis that slope is greater than zero

[0145] Table 3: Slope estimate relating cumulative adjusted SPHEQ and study month, by ID.

[0146] As shown in Table 3, there is a positive and statistically significant slope relating cumulative effect and study month for 4 of the 7 study subjects. This would imply that continued treatment resulted in a reduction in level of myopia in the test eye for these subjects. Using all subjects in a linear model, the estimated treatment effect improves by 0.068D (95% CI: 0.011 to 0.125; p = .011) per month of treatment. That is, with each month of treatment, the test eye becomes 0.068D less myopic as compared to the control eye. Given the high variability associated with biological data, the model R^2 is acceptable at 14.9%. Using the estimated slope, the predicted treatment effect after 12 months would be 0.816D with 95% confidence that the true effect falls within the interval

of 0.132D to 1.5D. These calculations assume the same pattern of improvement from month 5 to 12 as observed in months 1 to 4.

[0147] ***Analysis 2: Spherical equivalent refractive error obtained from Nidek in straight ahead gaze***

ID	Slope	p-value[a]
04	-0.223	<.001
62	0.078	.004
63	-0.170	<.001
66	0.046	.029
67	0.142	<.001
69	0.748	<.001
70	0.205	0.001

[0148] [a] P-value from regression model testing hypothesis that slope is greater than zero

[0149] Table 4: Slope estimate relating cumulative adjusted Spherical Equivalent ("SPHEQ") and study month, by ID

[0150] As shown in Table 4, there is a positive and statistically significant slope relating cumulative effect and study month for 5 of the 7 study subjects. This would imply that continued treatment resulted in a reduction in level of myopia in the test eye for these subjects. Using all subjects in a linear model, the estimated treatment effect improves by 0.118D (95% CI: 0.014 to 0.223; p = .014) per month of treatment. That is, with each month of treatment, the test eye becomes 0.118D less myopic as compared to the control eye. Given the high variability associated with biological data, the model R^2 is acceptable at 13.7%. Using the estimated slope, the predicted treatment effect after 12 months would be 1.42D with 95% confidence that the true effect falls within the interval of 0.166D to 2.67D. These calculations assume the same pattern of improvement from month 5 to 12 as observed in months 1 to 4.

[0151] There are differences in the estimated slope values from WAM and Nidek measures of spherical equivalent refractive error. For ID 63, the WAM measures showed a 0.216D improvement (test eye less myopic) per month while the Nidek measures showed a 0.170 decrease (test eye more myopic) per month. In both instances, the slope estimates are significantly different from zero. While ID 69 displayed large improvements (slope = +0.748D) using measurements from the Nidek, this same participant's WAM

measurements showed a non-significant negative treatment effect (slope = -0.027). The composite slope estimate from the repeated measures analysis when using Nidek data values (0.118) was nearly twice that observe in the WAM data (0.068). This difference is most likely related to the observed changes for ID 69.

[0152] The results indicate similar cumulative treatment effects when using either the WAM or Nidek to measure refractive error. Work in relation to the present disclosure suggests that Nidek autorefractor instruments consistently yield more minus measures compared to open field autorefractors like the WAM. This was confirmed in our data file as the majority of between-instrument differences favored a more minus measurement from the Nidek. Additionally, the between-instrument differences were greater (Nidek more myopic) for measurements obtained from the test eye. This factor may explain why endpoints seen using the Nidek are relatively greater as compared to the WAM. Nonetheless, we observe the same polarity in trends showing some effect in refraction endpoints with treatment using two different instruments, which is a significant finding.

[0153] ***Analysis 3: Axial length in straight ahead gaze***

ID	Slope	p-value[a]
04	12.733	.005
62	-8.337	<.001
63	-8.257	.008
66	-1.703	.015
67	4.413	.004
69	16.373	.003
70	27.130	<.001

[0154] [a] P-value from regression model testing hypothesis that slope is greater than zero.

[0155] Table 5: Slope estimate relating cumulative adjusted axial length (microns) and study month, by ID.

[0156] As in spherical equivalent refractive error, the majority of individual slope estimates are statistically significant and positive (4 of 7 subjects, Table 5). Using all subjects in a linear model, the estimated treatment effect improves by 6.051 microns (95% CI: 1.500 to 10.604 microns; p = .006) per month of treatment. That is, with each month of treatment, the test eye becomes 6.051 microns shorter as compared to the control eye. Given the high variability associated with biological data, the model R^2 is

acceptable at 17.9%. Using the estimated slope, the predicted treatment effect after 12 months would be 72.606 microns with 95% confidence that the true effect falls within the interval of 18.0 to 127.25 microns. These calculations assume the same pattern of improvement from month 5 to 12 as observed in months 1 to 4.

[0157] The pattern of changes in axial length observed for each participant would seem to correlate with the data obtained from the Nidek with the exception of ID 4. While this participant showed significant shortening of his/her eyes during the 4-month treatment period, data from the Nidek indicates a negative treatment effect.

[0158] **Experimental Conclusions**

[0159] The estimated treatment effect improves by 0.068D (95% CI: 0.011 to 0.125; p = .011) per month of treatment based on WAM open field autorefractor results.

[0160] The estimated treatment effect improves by 0.118D (95% CI: 0.014 to 0.223; p = .014) per month of treatment based on NIDEK autorefractor results.

[0161] The estimated treatment effect improves by 6.051 microns (95% CI: 1.500 to 10.604 microns; p = .006) per month of treatment for axial length measured by the Lenstar APS.

[0162] The estimated annual effect of treatment on refractive error change exceeds the expected myopia progression as reported by Zhou, et al. In that study, the annual progression rate of refraction was 0.43 D. See Zhou WJ, Zhang YY, Li H, Wu YF, Xu J, Lv S, Li G, Liu SC, Song SF. Five-year progression of refractive errors and incidence of myopia in school-aged children in western China. *J Epidemiol.* 2016 Jul 5; 26(7):386-95. Epub 2016 Feb 13.

[0163] The purpose of the present experimental study was to determine if transient changes in axial length and refraction using the device as described herein would lead to long-term and possibly permanent changes. The study showed that the treatment effect lasts at least 4 months, and furthermore was statistically significant in at least some instances. This is unexpected given the relatively small number of subjects (n=7), very short treatment time (5-7 hours/week) as compared to related studies by others, and short study duration (4 months). The use of within-subject estimates of effect as opposed to between-subject comparisons mitigates the impact of large inter-subject variability. The statistical analysis approach using the "cumulated adjusted differences" provided a representation of the treatment effect.

[0164] A person of ordinary skill in the art will recognized that additional studies can be conducted in accordance with the present disclosure, and that the treatment parameters can be adjusted as described herein to provide improved treatment results. For example, studies can be conducted to measure a transient change in one or more of axial length or refractive data over any appropriate duration of stimulation and measurement time frame, such as measuring the eye before and after treatment on the same day as treatment. Also, the number of subjects can be increased as compared to the clinical testing described herein.

[0165] FIG. 18 shows a method 1800 of decreasing a progression of refractive error of an eye.

[0166] At a step 1805, the eye is diagnosed as having a progressive refractive error. In some embodiments, the eye has been diagnosed as having a progression of refractive error such as myopia within a range from 0.25 D to 1.5 D per year and wherein the progression of myopia is decreased by at least 0.25 D. In some embodiments, the progression of refractive error such as myopia is greater than 0.6 D per year and wherein the progression of myopia is decreased by an amount within a range from 0.6D to 0.9 D per year.

[0167] At a step 1810, an optical property of the eye is measured at a first time.

[0168] At step 1820, a first light treatment is provided to the eye.

[0169] At as step 1830, the optical property of the eye is measured at a second time.

[0170] The optical property may comprise any suitable optical property as described herein. In some embodiments, the optical property comprises one or more of refractive data, axial length data or choroidal thickness data. In some embodiments, the optical property comprises one or more of an axial length, a binocularly measured axial length, a refraction, a manifest refraction, a cycloplegic refraction, an auto-refraction, a binocular auto refraction, an open field auto refraction, a binocular open field auto refraction, a scanning slit auto refraction, a wavefront map, a wavefront coefficient, a sphere coefficient, a cylinder coefficient, a coma, a spherical aberration, or a trefoil. In some embodiments, the optical property comprises refractive data and wherein a change in the refractive data between the first time and the second time corresponds to a change in axial length of the eye. In some embodiments, the change in axial length is determined in response to the change in the refractive data.

[0171] The optical property can be measured with a fixation stimulus presented to the eye to measure the refractive data. In some embodiments, the eye is exposed to a binocular stimulus to measure the optical property at the first time and the second time.

[0172] At a step 1840, a comparison of the optical property of the eye at the first time to the second time is generated. In some embodiments, the comparison comprises a difference between the measured optical property at the second time and the first time.

[0173] In some embodiments, the comparison comprises a difference between the second optical property and the first optical property, and the second treatment is adjusted in response to the difference.

[0174] The difference can be determined in many ways. In some embodiments, the difference comprises a transient change in the optical property of the eye between the first time and the second time. In some embodiments, the first time occurs on a first day, the first light treatment occurs on a plurality of days over a plurality weeks after the first day, and the second time occurs after the plurality of weeks and the second light treatment occurs after the second time. the first time occurs on a first day, the first light treatment occurs on a plurality of days after the first day, the second time occurs on a last of the plurality of days of the first light treatment, and the second light treatment occurs on a second day after the last of the plurality of days. In some embodiments, the first time occurs on a first day, the second time occurs on the first day, the first light treatment occurs on the first day and the second light treatment occurs on a second day after the first day.

[0175] At a step 1850, a second light treatment is configured in response to the comparison.

[0176] The first and second light treatments can be configured in many ways as described herein. In some embodiments, the first light treatment projects a first image to a focus anterior (or posterior) to the retina and the second light treatment projects a second image to a focus anterior (or posterior) to the retina. In some embodiments, the first image is focused anterior (or posterior) to the retina at a first distance and the second image is focused anterior (or posterior) to the retina at a second distance, the first distance different from the second distance.

[0177] The first and second images can be focused with any suitable optical structure as described herein. In some embodiments, the first image is projected with a first lens comprising a first clear central zone to focus the first image on the retina and a first outer zone to focus the first image anterior to the retina, and the second image is projected with

a second lens comprising a second clear zone to focus the second image on the retina and a second outer zone to focus the second image anterior to the retina.

[0178] The first and second images may comprise any suitable image as described herein. In some embodiments, the first image and the second image each comprise images of an object viewed through the lens.

[0179] In some embodiments, the first outer zone and the second outer zone comprise one or more of an aspheric profile, a plurality of lenslets, or alternating annular zones of increased optical power and decreased optical power.

[0180] In some embodiments, the first lens differs from the second lens by one or more of a difference between a first optical power of the first outer zone and a second optical power of the second optical zone, a difference between a diameter of the first clear zone and the second clear zone, a difference between an area of the first outer zone and the second outer zone, a difference between a first ratio of a first area of the first clear zone to a first area of the first outer zone and a second ratio of a second area of the second clear zone to a second area of the second outer zone, a difference between a first number of lenslets of the first outer zone and a second number of lenslets of the second outer zone, a difference between a first optical power of a first plurality of lenslets of the first outer zone and a second plurality of lenslets of a second outer zone, a difference between a first percentage of a first area of the first outer zone to provide the first image the focus anterior to the retina and a second percentage of a second area of the second outer zone to provide the second image with the focus anterior to the retina.

[0181] In some embodiments, the first image is focused at a first angle to an optical axis of the eye and the second image is focused at a second angle to the optical axis of the eye away from the fovea. Each of the first angle and the second angle can be within a range from 5 degrees to 35 degrees and optionally within a range and optionally within a range from about 15 degrees to 35 degrees. In some embodiments, the second angle is adjusted to an angle different from the first angle in response to the comparison.

[0182] The amount of defocus of the stimulus may comprise any suitable amount of focus as described herein and can be focused anterior or posterior to the retina. In some embodiments, the first image is focused anteriorly to the retina by a first amount within a range from 3 D to 10 D and the second image is focused anteriorly to the retina by a second amount within a range from 3 D to 10 D and optionally within ranges from 4.5 D to 8 D. In some embodiments, the second amount is adjusted to an amount different from the first amount in response to the comparison.

[0183] The stimulus can be configured in any suitable way as described herein. In some embodiments, the first light treatment comprises a first light stimulus and the second light treatment comprises a second stimulus, and the second light stimulus is configured in response to the comparison. The second light stimulus can be configured in many ways in response to the comparison and may differ from the first stimulus. In some embodiments, the first light stimulus comprises one or more of a location, a size, a spatial frequency distribution, an intensity, or an intensity relative to a background on a display. The second light stimulus comprises a second one or more of a location, a size, a spatial frequency distribution, an intensity, or an intensity relative to a background on a display, and the second light stimulus differs from the light stimulus with a difference in the one or more of the location, the size, the spatial frequency distribution, the intensity, or the intensity relative to the background on the display.

[0184] In some embodiments, the first image comprises a first stimulus on a first background and the second image comprises a second stimulus and a second background. In some embodiments, a first ratio of a first intensity of the first stimulus to a first intensity of the first background of the first stimulus is within a range from 10 to 50, and a second ratio of a second intensity of the second stimulus to a second background is within a range from 10 to 50 and optionally within ranges from 10 to 30. In some embodiments, the second ratio is adjusted to a value different from first ratio in response to the comparison. In some embodiments, the first stimulus and the second stimulus are projected onto the retina with a display.

[0185] In some embodiments, an intensity of the stimulus is related to an amount of ambient illumination. In some embodiments, the eye is exposed to a first ambient illumination while the first image is focused and a second ambient illumination while the second image is focused. In some embodiments, a first ratio of a first intensity of the first stimulus to the first ambient illumination is within a range from 1.5 to 10 and wherein a second ratio of a second intensity of the second stimulus to the ambient illumination is within a range from 1.5 to 10 and optionally withing ranges from 2.5 to 5. In some embodiments, the second ratio is adjusted to a value different from the first ratio in response to the comparison.

[0186] The stimulus may comprise a plurality of stimuli, which can be configured in any way as described herein. In some embodiments, the first treatment and the second treatment each comprises a plurality of stimuli distributed over a plurality of regions of the retina located away from a fovea of the eye, each of the plurality of stimuli imaged

anterior to the retina and blurred on the retina, wherein the plurality of stimuli are arranged to define a treatment area on the retina. In some embodiments, the first treatment comprises a first treatment area over a first percentage of the retina and the second treatment comprises a second treatment over a second percentage of the retina and wherein the second treatment area is adjusted to an amount different from the first treatment area in response to the comparison. In some embodiments, the first treatment area comprises a first percentage of a total area of the retina and the second treatment area comprises a second percentage of the total area of the retina and wherein the second percentage is adjusted to an amount different from the first percentage in response to the comparison and optionally wherein the first percentage and the second percentage are within a range from about 15% to about 65% of the total area of the retina. In some embodiments, the first treatment area and the second treatment area comprise annular areas with the fovea located outside the annular areas.

[0187] The first stimulus and the second stimulus may comprise any suitable wavelength and the wavelength may be adjusted as described herein. In some embodiments, the first treatment comprises a first wavelength of light corresponding to a first peak sensitivity of cones of the eye and the second treatment comprises a second wavelength of light corresponding to a second peak sensitivity of the cones of the eye and optionally wherein the peak sensitivity of the cones correspond to light at a wavelength of within a range from about 420 nm to about 440 nm, from about 534 nm to about 545 nm or 564 to about 580 nm. In some embodiments, the first peak corresponds to a first range and the second peak corresponds to a second range different from the first range in response to the comparison. In some embodiments, the first light treatment comprises a first distribution of wavelengths and the second light treatment comprises a second distribution of wavelengths, wherein the second distribution differs from the first distribution in response to the comparison.

[0188] In some embodiments, the first distribution of wavelengths corresponds to a first temperature and the second distribution corresponds to a second temperature and optional wherein the first temperature and the second temperature are within a range from about 5000 degrees Kelvin to about 11,000 degrees Kelvin.

[0189] In some embodiments, one or more of the first image or the second image is projected into the eye and an amount of astigmatism provided by an optical structure as described herein. In some embodiments, the first treatment projects a first image of a stimulus anterior to the retina with a first amount of astigmatism and the second treatment

projects a second image anterior to the retina with a second amount of astigmatism. In some embodiments, the first amount of astigmatism differs from the second amount of astigmatism in response to the comparison. In some embodiments, the first amount of astigmatism is within a first range from 0.5 D to 4 D and the second amount of astigmatism is within a second range from 0.5D to 4D.

[0190] The intensity of the stimulus may comprise any suitable intensity as described herein. In some embodiments, the first treatment comprises a first stimulus projected anterior to the retina with a first intensity and the second stimulus comprises a second stimulus projected anterior to the retina with a second intensity. In some embodiments, the second intensity differs from the first intensity in response to the comparison. In some embodiments, the first intensity and the second intensity each comprises a brightness within a range 1 to 1000 Trolands. In some embodiments, the first intensity and the second intensity each comprises a luminance with in a range from 100 to 50,000 nits or within a range from 1 to 10,000 nits.

[0191] The stimulus may comprise any suitable spatial frequency properties as described herein. In some embodiments, the first treatment comprises a first plurality of stimuli projected anterior to the retina with a first spatial frequency distribution and wherein the second treatment comprises a second plurality of stimuli projected anterior to the retina with a second spatial frequency distribution. In some embodiments, the second spatial frequency distribution differs from the first spatial frequency distribution in response to the comparison. In some embodiments, each of the first and second plurality of stimuli comprises a length, edges, and an intensity profile distribution to generate spatial frequencies in a range of $1X10^{-1}$ to $2.5X10^{1}$ cycles per degree as imaged into the eye anterior or posterior to the retina and optionally within a range from $1X10^{-1}$ to $1X10^{1}$ cycles per degree. In some embodiments, each of the first and second plurality of stimuli as imaged in the eye comprises a spatial frequency distribution providing a decrease in spatial frequency amplitude with an increase in spatial frequency for a range of spatial frequencies from about $1X10^{-1}$ to about $2.5X10^{1}$ cycles per degree and optionally from $1X10^{-1}$ to about $5X10^{0}$ cycles per degree. In some embodiments, the decrease in spatial frequency intensity is within a range from $1/(\text{spatial frequency})^{0.5}$ to $1/(\text{spatial frequency})^{2}$ for the spatial frequency amplitude in arbitrary units and optionally from 1/(spatial frequency) to $1/(\text{spatial frequency})^{2}$ for the spatial frequency amplitude in arbitrary units. In some embodiments, the range of spatial frequencies is from about $3X10^{-1}$ to about

$1.0X10^{1}$ cycles per degree and optionally within a range from about $3X10^{-1}$ to about $2.0X10^{0}$ and further optionally from about $3X10^{-1}$ to about $1.0X10^{0}$.

[0192] The light stimulus may comprise any suitable stimulus as described herein and may comprise a pulsed stimulus or a continuous stimulus. In some embodiments, the first light treatment projects a first image of a first pulsed stimulus and wherein the second light treatment projects a second image of a second pulsed stimulus. In some embodiments, first pulsed stimulus comprises a first duty cycle and the second pulsed stimulus comprises a second duty cycle, the second duty cycle different from the first duty cycle in response to the comparison. In some embodiments, the first pulsed stimulus comprises a first frequency and the second pulsed stimulus comprises a second frequency different from the first frequency in response to the comparison.

[0193] The image of the projected stimulus can be projected anterior or posterior to the retina, and the location can be changed from anterior to posterior or vice versa in response to the comparison. In some embodiments, the first light treatment projects a first image of a first stimulus to a first location anterior or posterior to the retina, and the second light treatment projects a second stimulus at a second location anterior or posterior to the retina. In some embodiments, the second location differs from the first location in response to the comparison. In some embodiments, the first location is on a first side of the retina and the second location is on a second side of the retina opposite the first side in response to the comparison.

[0194] At a step 1860, the second light treatment is provided to the eye in response to the comparison.

[0195] In some embodiments, the first light treatment comprises first light stimulus and the second light treatment comprises a second light stimulus.

[0196] The first and second light treatments can be provided to the eye in any suitable way as described herein. In some embodiments, the first treatment comprises a first duration on a first day and the second treatment comprises a second duration on a second day, the second duration different from the first duration in response to the comparison. In some embodiments, the first duration is within a range from 1 hour to 8 hours and the second duration is within a range from 1 hour to 8 hours and optionally within ranges from 1.5 to 3 hours.

[0197] In some embodiments, the first treatment occurs at a first local time of day and the second light treatment occurs at a second time of day different from the first time of day in response to the comparison. The first treatment may occur for a first duration at

the first local time and the second treatment may occur at the second local time for a second duration, the first duration on the first day at the first local time not overlapping with the second duration on the second day at the second local time in response to the comparison. In some embodiments, the time of day is within a range from 7 am to noon local time or within a range from 5 pm to midnight local time. In some embodiments, the second local time of day differs from the first local time of day in response to the comparison.

[0198] Although reference is made to treatment and measurement of an eye, the follow eye can also be treated and measured. In some embodiments, the eye is treated with a fellow eye for the first treatment and the second treatment.

[0199] In some embodiments, the refractive error of the eye is corrected during treatment with appropriate lenses as described herein. In some embodiments, a first refractive error of the eye is corrected for during the first treatment with a first refractive correction to provide viewing over a first clear central zone and a second refractive error of the eye is corrected for the second treatment with a second refractive correction over a second clear central zone. In some embodiments, the first refractive correction differs from the second refractive correction in response to the comparison.

[0200] Although reference is made to a method 1800 of decreasing a progression of refractive error of an eye, one of ordinary skill in the art will recognize many adaptations and variations. For example, the steps can be performed in any suitable order, some of the steps can be removed and some of the steps repeated. Also, the processor as described herein can be configured with instructions to perform any one or more of the steps of the method 1800. Alternatively or in combination, any of the optical components, optical structures, displays, treatment devices, and systems can be configured in accordance with method 1800, such as system 1600, treatment device 1602, or system 1700 and these components can be readily interchanged in accordance with the present disclosure as will be understood by one of ordinary skill in the art.

[0201] As described herein, the computing devices and systems described and/or illustrated herein broadly represent any type or form of computing device or system capable of executing computer-readable instructions, such as those contained within the modules described herein. In their most basic configuration, these computing device(s) may each comprise at least one memory device and at least one physical processor.

[0202] The term “memory” or “memory device,” as used herein, generally represents any type or form of volatile or non-volatile storage device or medium capable of storing

data and/or computer-readable instructions. In one example, a memory device may store, load, and/or maintain one or more of the modules described herein. Examples of memory devices comprise, without limitation, Random Access Memory (RAM), Read Only Memory (ROM), flash memory, Hard Disk Drives (HDDs), Solid-State Drives (SSDs), optical disk drives, caches, variations or combinations of one or more of the same, or any other suitable storage memory.

[0203] In addition, the term "processor" or "physical processor," as used herein, generally refers to any type or form of hardware-implemented processing unit capable of interpreting and/or executing computer-readable instructions. In one example, a physical processor may access and/or modify one or more modules stored in the above-described memory device. Examples of physical processors comprise, without limitation, microprocessors, microcontrollers, Central Processing Units (CPUs), Field-Programmable Gate Arrays (FPGAs) that implement softcore processors, Application-Specific Integrated Circuits (ASICs), portions of one or more of the same, variations or combinations of one or more of the same, or any other suitable physical processor. The processor may comprise a distributed processor system, e.g. running parallel processors, or a remote processor such as a server, and combinations thereof.

[0204] Although illustrated as separate elements, the method steps described and/or illustrated herein may represent portions of a single application. In addition, in some embodiments one or more of these steps may represent or correspond to one or more software applications or programs that, when executed by a computing device, may cause the computing device to perform one or more tasks, such as the method step.

[0205] In addition, one or more of the devices described herein may transform data, physical devices, and/or representations of physical devices from one form to another. Additionally or alternatively, one or more of the modules recited herein may transform a processor, volatile memory, non-volatile memory, and/or any other portion of a physical computing device from one form of computing device to another form of computing device by executing on the computing device, storing data on the computing device, and/or otherwise interacting with the computing device.

[0206] The term "computer-readable medium," as used herein, generally refers to any form of device, carrier, or medium capable of storing or carrying computer-readable instructions. Examples of computer-readable media comprise, without limitation, transmission-type media, such as carrier waves, and non-transitory-type media, such as magnetic-storage media (e.g., hard disk drives, tape drives, and floppy disks), optical-

storage media (e.g., Compact Disks (CDs), Digital Video Disks (DVDs), and BLU-RAY disks), electronic-storage media (e.g., solid-state drives and flash media), and other distribution systems.

[0207] A person of ordinary skill in the art will recognize that any process or method disclosed herein can be modified in many ways. The process parameters and sequence of the steps described and/or illustrated herein are given by way of example only and can be varied as desired. For example, while the steps illustrated and/or described herein may be shown or discussed in a particular order, these steps do not necessarily need to be performed in the order illustrated or discussed.

[0208] The various exemplary methods described and/or illustrated herein may also omit one or more of the steps described or illustrated herein or comprise additional steps in addition to those disclosed. Further, a step of any method as disclosed herein can be combined with any one or more steps of any other method as disclosed herein.

[0209] The processor as described herein can be configured to perform one or more steps of any method disclosed herein. Alternatively or in combination, the processor can be configured to combine one or more steps of one or more methods as disclosed herein.

[0210] Unless otherwise noted, the terms "connected to" and "coupled to" (and their derivatives), as used in the specification and claims, are to be construed as permitting both direct and indirect (i.e., via other elements or components) connection. In addition, the terms "a" or "an," as used in the specification and claims, are to be construed as meaning "at least one of." Finally, for ease of use, the terms "including" and "having" (and their derivatives), as used in the specification and claims, are interchangeable with and shall have the same meaning as the word "comprising.

[0211] The processor as disclosed herein can be configured with instructions to perform any one or more steps of any method as disclosed herein.

[0212] It will be understood that although the terms "first," "second," "third", etc. may be used herein to describe various layers, elements, components, regions or sections without referring to any particular order or sequence of events. These terms are merely used to distinguish one layer, element, component, region or section from another layer, element, component, region or section. A first layer, element, component, region or section as described herein could be referred to as a second layer, element, component, region or section without departing from the teachings of the present disclosure.

[0213] As used herein, the term "or" is used inclusively to refer items in the alternative and in combination.

[0214] As used herein, characters such as numerals refer to like elements.

[0215] The present disclosure includes the following numbered clauses.

[0216] Clause 1. A method of treating an eye to decrease a progression of myopia, the method comprising: measuring an optical property of the eye at a first time; providing a first light treatment to the eye to decrease the progression of myopia; measuring the optical property of the eye at a second time after the first light treatment; generating a comparison of the optical property of the eye at the second time to the optical property of the eye at the first time; and providing a second light treatment to the eye in response to the comparison.

[0217] Clause 2. The method of clause 1, wherein the first light treatment comprises a first light stimulus and the second light treatment comprises a second stimulus and wherein the second light stimulus is configured in response to the comparison.

[0218] Clause 3. The method of clause 2, wherein the first light stimulus comprises one or more of a location, a size, a spatial frequency distribution, an intensity, or an intensity relative to a background on a display, and the second light stimulus differs from the second light stimulus with a difference of the one or more of the location, the size, the spatial frequency distribution, the intensity, or the intensity relative to the background on the display between the first light stimulus and the second light stimulus.

[0219] Clause 4. The method of clause 1, wherein the comparison comprises a difference between the measured optical property at the second time and the first time and wherein the second treatment is adjusted in response to the difference.

[0220] Clause 5. The method of clause 4, wherein the difference comprises a transient change in the optical property of the eye between the first time and the second time and optionally wherein the transient change comprises a change in choroidal thickness of the eye.

[0221] Clause 6. The method of clause 5, wherein first time occurs on a first day, the first light treatment occurs on a plurality of days over a plurality weeks on or after the first day, and the second time occurs after the plurality of weeks and the second light treatment occurs on or after the second time.

[0222] Clause 7. The method of clause 5, wherein the first time occurs on a first day, the first light treatment occurs on a plurality of days on or after the first day, the second time occurs on a last of the plurality of days of the first light treatment, and the second light treatment occurs on a second day after the last of the plurality of days.

[0223] Clause 8. The method of clause 5, wherein the first time occurs on a first day, the second time occurs on the first day, the first light treatment occurs on the first day and the second light treatment occurs on a second day after the first day.

[0224] Clause 9. The method of clause 1, wherein the optical property comprises one or more of refractive data, axial length data or choroidal thickness data.

[0225] Clause 10. The method of clause 1, wherein the first light treatment projects a first image to a focus anterior to the retina and the second light treatment projects a second image to a focus anterior to the retina.

[0226] Clause 11. The method of clause 10, wherein the first image is focused anterior to the retina at a first distance and the second image is focused anterior to the retina at a second distance, the first distance different from the second distance.

[0227] Clause 12. The method of clause 10, wherein the first image is projected with a first lens comprising a first clear central zone to focus the first image on the retina and a first outer zone to focus the first image anterior to the retina, and the second image is projected with a second lens comprising a second clear zone to focus the second image on the retina and a second outer zone to focus the second image anterior to the retina.

[0228] Clause 13. The method of clause 12, wherein the first image and the second image comprise images of an object viewed through the lens.

[0229] Clause 14. The method of clause 12, wherein the first outer zone and the second outer zone comprise one or more of an aspheric profile, a plurality of lenslets, or alternating annular zones of increased optical power and decreased optical power.

[0230] Clause 15. The method of clause 12, wherein the first lens differs from the second lens by one or more of a difference between a first optical power of the first outer zone and a second optical power of the second optical zone, a difference between a diameter of the first clear zone and the second clear zone, a difference between an area of the first outer zone and the second outer zone, a difference between a first ratio of a first area of the first clear zone to a first area of the first outer zone and a second ratio of a second area of the second clear zone to a second area of the second outer zone, a difference between a first number of lenslets of the first outer zone and a second number of lenslets of the second outer zone, a difference between a first optical power of a first plurality of lenslets of the first outer zone and a second plurality of lenslets of a second outer zone, a difference between a first percentage of a first area of the first outer zone to provide the first image the focus anterior to the retina and a second percentage of a

second area of the second outer zone to provide the second image with the focus anterior to the retina.

[0231] Clause 16. The method of clause 10, wherein the first image is focused at a first angle to an optical axis of the eye and the second image is focused at a second angle to the optical axis of the eye away from the fovea.

[0232] Clause 17. The method of clause 16 wherein each of the first angle and the second angle are within a range from 5 degrees to 35 degrees and optionally within a range and optionally within a range from about 15 degrees to 35 degrees.

[0233] Clause 18. The method of clause 16, wherein the second angle is adjusted to an angle different from the first angle in response to the comparison.

[0234] Clause 19. The method of clause 10, wherein the first image is focused anteriorly to the retina by a first amount within a range from 3 D to 10 D and the second image is focused anteriorly to the retina by a second amount within a range from 3 D to 10 D and optionally within ranges from 4.5 D to 8 D.

[0235] Clause 20. The method of clause 19, wherein the second amount is adjusted to an amount different from the first amount in response to the comparison.

[0236] Clause 21. The method of clause 10, wherein the first image comprises a first stimulus on a first background and the second image comprises a second stimulus and a second background.

[0237] Clause 22. The method of clause 21 wherein a first ratio of a first intensity of the first stimulus to a first intensity of the first background of the first stimulus is within a range from 10 to 50 and wherein a second ratio of a second intensity of the second stimulus to a second background is within a range from 10 to 50 and optionally within ranges from 10 to 30.

[0238] Clause 23. The method of clause 22, wherein the second ratio is adjusted to a value different from first ratio in response to the comparison.

[0239] Clause 24. The method of clause 21, wherein the first stimulus and the second stimulus are projected onto the retina with a display.

[0240] Clause 25. The method of clause 10, wherein the eye is exposed to a first ambient illumination while the first image is focused and a second ambient illumination while the second image is focused.

[0241] Clause 26. The method of clause 25 and wherein a first ratio of a first intensity of the first stimulus to the first ambient illumination is within a range from 1.5 to 10 and

wherein a second ratio of a second intensity of the second stimulus to the ambient illumination is within a range from 1.5 to 10 and optionally withing ranges from 2.5 to 5.

[0242] Clause 27. The method of clause 26, wherein the second ratio is adjusted to a value different from the first ratio in response to the comparison.

[0243] Clause 28. The method of clause 1, wherein the first treatment and the second treatment each comprises a plurality of stimuli distributed over a plurality of regions of the retina located away from a fovea of the eye, each of the plurality of stimuli imaged anterior to the retina and blurred on the retina, wherein the plurality of stimuli are arranged to define a treatment area on the retina.

[0244] Clause 29. The method of clause 28, wherein the first treatment comprises a first treatment area over a first percentage of the retina and the second treatment comprises a second treatment over a second percentage of the retina and wherein the second treatment area is adjusted to an amount different from the first treatment area in response to the comparison.

[0245] Clause 30. The method of clause 29, wherein the first treatment area comprises a first percentage of a total area of the retina and the second treatment area comprises a second percentage of the total area of the retina and wherein the second percentage is adjusted to an amount different from the first percentage in response to the comparison and optionally wherein the first percentage and the second percentage are within a range from about 15% to about 65% of the total area of the retina.

[0246] Clause 31. The method of clause 29, wherein the first treatment area and the second treatment area comprise annular areas with the fovea located outside the annular areas.

[0247] Clause 32. The method of clause 1, wherein the first treatment comprises a first wavelength of light corresponding to a first peak sensitivity of cones of the eye and the second treatment comprises a second wavelength of light corresponding to a second peak sensitivity of the cones of the eye and optionally wherein the peak sensitivity of the cones correspond to light at a wavelength of within a range from about 420 nm to about 440 nm, from about 534 nm to about 545 nm or 564 to about 580 nm.

[0248] Clause 33. The method of clause 32, wherein the first peak corresponds to a first range and the second peak corresponds to a second range different from the first range in response to the comparison.

[0249] Clause 34. The method of clause 1, wherein the first light treatment comprises a first distribution of wavelengths and the second light treatment comprises a second

distribution of wavelengths, wherein the second distribution differs from the first distribution in response to the comparison.

[0250] Clause 35. The method of clause 34, wherein the first distribution of wavelengths corresponds to a first temperature and the second distribution corresponds to a second temperature and optional wherein the first temperature and the second temperature are within a range from about 5000 degrees Kelvin to about 11,000 degrees Kelvin.

[0251] Clause 36. The method of clause 1, wherein the first treatment comprises a first duration on a first day and the second treatment comprises a second duration on a second day, the second duration different from the first duration in response to the comparison.

[0252] Clause 37. The method of clause 36, wherein the first duration is within a range from 1 hour to 8 hours and the second duration is within a range from 1 hour to 8 hours and optionally within ranges from 1.5 to 3 hours.

[0253] Clause 38. The method of clause 1, wherein the first treatment occurs at a first local time of day and the second light treatment occurs at a second time of day different from the first time of day in response to the comparison.

[0254] Clause 39. The method of clause 38, wherein the first treatment occurs for a first duration at the first local time and the second treatment occurs at the second local time for a second duration, the first duration on the first day at the first local time not overlapping with the second duration on the second day at the second local time in response to the comparison.

[0255] Clause 40. The method of clause 38, wherein the time of day is within a range from 7 am to noon local time or within a range from 5 pm to midnight local time.

[0256] Clause 41. The method of clause 38, wherein the second local time of day differs from the first local time of day in response to the comparison.

[0257] Clause 42. The method of clause 1, wherein the first treatment projects a first image of a stimulus anterior to the retina with a first amount of astigmatism and the second treatment projects a second image anterior to the retina with a second amount of astigmatism.

[0258] Clause 43. The method of clause 42, wherein the first amount of astigmatism differs from the second amount of astigmatism in response to the comparison.

[0259] Clause 44. The method of clause 42, wherein the first amount of astigmatism is within a first range from 0.5 D to 4 D and the second amount of astigmatism is within a second range from 0.5D to 4D.

[0260] Clause 45. The method of clause 1, wherein the eye has been diagnosed as having a progression of myopia within a range from 0.25 D to 1.5 D per year and wherein the progression of myopia is decreased by at least 0.25 D.

[0261] Clause 46. The method of clause 45, wherein the progression of myopia is greater than 0.6 D per year and wherein the progression of myopia is decreased by an amount within a range from 0.6D to 0.9 D per year.

[0262] Clause 47. The method of clause 1, wherein the first treatment comprises a first stimulus projected anterior to the retina with a first intensity and the second stimulus comprises a second stimulus projected anterior to the retina with a second intensity.

[0263] Clause 48. The method of clause 47, wherein the second intensity differs from the first intensity in response to the comparison.

[0264] Clause 49. The method of clause 47, the first intensity and the second intensity each comprises a brightness within a range 1 to 1000 Trolands.

[0265] Clause 50. The method of clause 47, wherein the first intensity and the second intensity each comprises a luminance with in a range from 100 to 50,000 nits or within a range from 1 to 10,000 nits.

[0266] Clause 51. The method of clause 1, wherein the first treatment comprises a first plurality of stimuli projected anterior to the retina with a first spatial frequency distribution and wherein the second treatment comprises a second plurality of stimuli projected anterior to the retina with a second spatial frequency distribution.

[0267] Clause 52. The method of clause 51, wherein the second spatial frequency distribution differs from the first spatial frequency distribution in response to the comparison.

[0268] Clause 53. The method of clause 52, wherein each of the first and second plurality of stimuli comprises a length, edges, and an intensity profile distribution to generate spatial frequencies in a range of $1X10^{-1}$ to $2.5X10^{1}$ cycles per degree as imaged into the eye anterior or posterior to the retina and optionally within a range from $1X10^{-1}$ to $1X10^{1}$ cycles per degree.

[0269] Clause 54. The method of clause 51, wherein each of the first and second plurality of stimuli as imaged in the eye comprises a spatial frequency distribution providing a decrease in spatial frequency amplitude with an increase in spatial frequency for a range of spatial frequencies from about $1X10^{-1}$ to about $2.5X10^{1}$ cycles per degree and optionally from $1X10^{-1}$ to about $5X10^{0}$ cycles per degree.

[0270] Clause 55. The apparatus of clause 54, wherein the decrease in spatial frequency intensity is within a range from 1/(spatial frequency)$^{0.5}$ to 1/(spatial frequency)^{2} for the spatial frequency amplitude in arbitrary units and optionally from 1/(spatial frequency) to 1/(spatial frequency)^{2} for the spatial frequency amplitude in arbitrary units.

[0271] Clause 56. The method of clause 54, wherein the range of spatial frequencies is from about $3X10^{-1}$ to about $1.0X10^{1}$ cycles per degree and optionally within a range from about $3X10^{-1}$ to about $2.0X10^{0}$ and further optionally from about $3X10^{-1}$ to about $1.0X10^{0}$.

[0272] Clause 57. The method of clause 1, wherein the first light treatment projects a first image of a first pulsed stimulus and wherein the second light treatment projects a second image of a second pulsed stimulus.

[0273] Clause 58. The method of clause 57, wherein first pulsed stimulus comprises a first duty cycle and the second pulsed stimulus comprises a second duty cycle, the second duty cycle different from the first duty cycle in response to the comparison.

[0274] Clause 59. The method of clause 57, wherein the first pulsed stimulus comprises a first frequency and the second pulsed stimulus comprises a second frequency different from the first frequency in response to the comparison.

[0275] Clause 60. The method of clause 1, wherein the first light treatment projects a first image of a first stimulus to a first location anterior or posterior to the retina and wherein the second light treatment projects a second stimulus at a second location anterior or posterior to the retina.

[0276] Clause 61. The method of clause 60, wherein the second location differs from the first location in response to the comparison.

[0277] Clause 62. The method of clause 61, wherein the first location is on a first side of the retina and the second location is on a second side of the retina opposite the first side in response to the comparison.

[0278] Clause 63. The method of clause 1, wherein the optical property comprises one or more of an axial length, a binocularly measured axial length, a refraction, a manifest refraction, a cycloplegic refraction, an auto-refraction, a binocular auto refraction, an open field auto refraction, a binocular open field auto refraction, a scanning slit auto refraction, a wavefront map, a wavefront coefficient, a sphere coefficient, a cylinder coefficient, a coma, a spherical aberration, or a trefoil.

[0279] Clause 64. The method of clause 63, wherein the optical property comprises refractive data and wherein a change in the refractive data between the first time and the second time corresponds to a change in axial length of the eye.

[0280] Clause 65. The method of clause 64, wherein the change in axial length is determined in response to the change in the refractive data.

[0281] Clause 66. The method of clause 1, wherein the eye is provided with a binocular fixation stimulus to measure the optical property at the first time and the second time.

[0282] Clause 67. The method of clause 1, wherein the eye is treated with a fellow eye for the first treatment and the second treatment.

[0283] Clause 68. The method of clause 1, wherein a first refractive error of the eye is corrected for during the first treatment with a first refractive correction to provide viewing over a first clear central zone and a second refractive error of the eye is corrected for the second treatment with a second refractive correction over a second clear central zone.

[0284] Clause 69. The method of clause 68, wherein the first refractive correction differs from the second refractive correction in response to the comparison.

[0285] Clause 70. An apparatus to decrease a progression of myopia of an eye, the apparatus comprising: a light source to provide an image of a first stimulus anterior to a retina of the eye at a location away from the retina; and a processor operatively coupled to the light source to adjust the stimulus to a second stimulus in response to a change in an optical property of the eye from the first stimulus.

[0286] Clause 71. The apparatus of clause 70, wherein the processor is configured to generate a comparison of the optical property of the eye at a first time prior to a first light treatment with the first stimulus to the optical property of the eye at a second time after the first light treatment and to configure the second stimulus in response to the comparison.

[0287] Clause 72. The apparatus of clause 71, wherein the light source comprises a display and the first stimulus and the second stimulus are each presented on the display and wherein the second stimulus presented on the display is configured with one or more of a location, a size, a spatial frequency distribution, an intensity, or an intensity relative to a background on the display in response to the comparison.

[0288] Clause 73. The apparatus of clause 72, wherein the one or more of the location, the size, the spatial frequency distribution, the intensity, or the intensity relative to a

background on the display of the second stimulus differs from one or more of a location, a size, a spatial frequency distribution, an intensity, or an intensity relative to a background on the display of the first stimulus.

[0289] Clause 74. The apparatus of clause 72, wherein the first stimulus comprises a plurality of first stimuli and the second stimulus comprises a plurality of second stimuli and wherein each of the second plurality of stimuli is configured in response to the comparison.

[0290] Clause 75. The apparatus of clause 70, further comprising one or more optical structures to project the image of the first stimulus and the second stimulus anterior to the retina and away from the fovea to provide a blurred images of the first stimulus and the second stimulus on the retina.

[0291] Clause 76. The apparatus of clause 75, wherein the one or more optical structures comprises one or more of a lens, a prism, a wedge, a flat, a diffractive optic, a Fresnel lens, a plurality of echelletes, an aspheric profile a liquid crystal, a plurality of lenslets, a plurality of regions of positive optical power, a plurality of annular regions of increased optical or a plurality of gaps extending between regions of increased optical power.

[0292] Clause 77. The apparatus of clause 75, wherein the one or more optical structures comprises a first optical structure to provide the first stimulus and a second optical structure to provide the second stimulus, the second optical structure configured in response to the comparison.

[0293] Clause 78. The apparatus of clause 77, wherein the second optical structure is configured with one or more of a focal length, a tilt angle, a diffractive pattern, an echelletes pattern, an aspheric profile, a liquid crystal index change, locations of regions of positive optical power, or gaps in response to the comparison.

[0294] Clause 79. The apparatus of clause 70, wherein the processor configured with instructions to perform the method of any one of the preceding method clauses.

[0295] Embodiments of the present disclosure have been shown and described as set forth herein and are provided by way of example only. One of ordinary skill in the art will recognize numerous adaptations, changes, variations and substitutions without departing from the scope of the present disclosure. Several alternatives and combinations of the embodiments disclosed herein may be utilized without departing from the scope of the present disclosure and the inventions disclosed herein. Therefore, the scope of the

presently disclosed inventions shall be defined solely by the scope of the appended claims and the equivalents thereof.

CLAIMS

WHAT IS CLAIMED IS:

1. A method of treating an eye to decrease a progression of myopia, the method comprising:

measuring an optical property of the eye at a first time;

providing a first light treatment to the eye to decrease the progression of myopia;

measuring the optical property of the eye at a second time after the first light treatment;

generating a comparison of the optical property of the eye at the second time to the optical property of the eye at the first time; and

providing a second light treatment to the eye in response to the comparison.

2. The method of claim 1, wherein the first light treatment comprises a first light stimulus and the second light treatment comprises a second stimulus and wherein the second light stimulus is configured in response to the comparison.

3. The method of claim 2, wherein the first light stimulus comprises one or more of a location, a size, a spatial frequency distribution, an intensity, or an intensity relative to a background on a display, and the second light stimulus differs from the second light stimulus with a difference of the one or more of the location, the size, the spatial frequency distribution, the intensity, or the intensity relative to the background on the display between the first light stimulus and the second light stimulus.

4. The method of claim 1, wherein the comparison comprises a difference between the measured optical property at the second time and the first time and wherein the second treatment is adjusted in response to the difference.

5. The method of claim 4, wherein the difference comprises a transient change in the optical property of the eye between the first time and the second time and optionally wherein the transient change comprises a change in choroidal thickness of the eye.

6. The method of claim 5, wherein first time occurs on a first day, the first light treatment occurs on a plurality of days over a plurality weeks on or after the first day, and the second time occurs after the plurality of weeks and the second light treatment occurs on or after the second time.

7. The method of claim 5, wherein the first time occurs on a first day, the first light treatment occurs on a plurality of days on or after the first day, the second time

occurs on a last of the plurality of days of the first light treatment, and the second light treatment occurs on a second day after the last of the plurality of days.

8. The method of claim 5, wherein the first time occurs on a first day, the second time occurs on the first day, the first light treatment occurs on the first day and the second light treatment occurs on a second day after the first day.

9. The method of claim 1, wherein the optical property comprises one or more of refractive data, axial length data or choroidal thickness data.

10. The method of claim 1, wherein the first light treatment projects a first image to a focus anterior to the retina and the second light treatment projects a second image to a focus anterior to the retina.

11. The method of claim 10, wherein the first image is focused anterior to the retina at a first distance and the second image is focused anterior to the retina at a second distance, the first distance different from the second distance.

12. The method of claim 10, wherein the first image is projected with a first lens comprising a first clear central zone to focus the first image on the retina and a first outer zone to focus the first image anterior to the retina, and the second image is projected with a second lens comprising a second clear zone to focus the second image on the retina and a second outer zone to focus the second image anterior to the retina.

13. The method of claim 12, wherein the first image and the second image comprise images of an object viewed through the lens.

14. The method of claim 12, wherein the first outer zone and the second outer zone comprise one or more of an aspheric profile, a plurality of lenslets, or alternating annular zones of increased optical power and decreased optical power.

15. The method of claim 12, wherein the first lens differs from the second lens by one or more of a difference between a first optical power of the first outer zone and a second optical power of the second optical zone, a difference between a diameter of the first clear zone and the second clear zone, a difference between an area of the first outer zone and the second outer zone, a difference between a first ratio of a first area of the first clear zone to a first area of the first outer zone and a second ratio of a second area of the second clear zone to a second area of the second outer zone, a difference between a first number of lenslets of the first outer zone and a second number of lenslets of the second outer zone, a difference between a first optical power of a first plurality of lenslets of the first outer zone and a second plurality of lenslets of a second outer zone, a difference between a first percentage of a first area of the first outer zone to provide the first image

the focus anterior to the retina and a second percentage of a second area of the second outer zone to provide the second image with the focus anterior to the retina.

16. The method of claim 10, wherein the first image is focused at a first angle to an optical axis of the eye and the second image is focused at a second angle to the optical axis of the eye away from the fovea.

17. The method of claim 16 wherein each of the first angle and the second angle are within a range from 5 degrees to 35 degrees and optionally within a range and optionally within a range from about 15 degrees to 35 degrees.

18. The method of claim 16, wherein the second angle is adjusted to an angle different from the first angle in response to the comparison.

19. The method of claim 10, wherein the first image is focused anteriorly to the retina by a first amount within a range from 3 D to 10 D and the second image is focused anteriorly to the retina by a second amount within a range from 3 D to 10 D and optionally within ranges from 4.5 D to 8 D.

20. The method of claim 19, wherein the second amount is adjusted to an amount different from the first amount in response to the comparison.

21. The method of claim 10, wherein the first image comprises a first stimulus on a first background and the second image comprises a second stimulus and a second background.

22. The method of claim 21 wherein a first ratio of a first intensity of the first stimulus to a first intensity of the first background of the first stimulus is within a range from 10 to 50 and wherein a second ratio of a second intensity of the second stimulus to a second background is within a range from 10 to 50 and optionally within ranges from 10 to 30.

23. The method of claim 22, wherein the second ratio is adjusted to a value different from first ratio in response to the comparison.

24. The method of claim 21, wherein the first stimulus and the second stimulus are projected onto the retina with a display.

25. The method of claim 10, wherein the eye is exposed to a first ambient illumination while the first image is focused and a second ambient illumination while the second image is focused.

26. The method of claim 25 and wherein a first ratio of a first intensity of the first stimulus to the first ambient illumination is within a range from 1.5 to 10 and

wherein a second ratio of a second intensity of the second stimulus to the ambient illumination is within a range from 1.5 to 10 and optionally withing ranges from 2.5 to 5.

27. The method of claim 26, wherein the second ratio is adjusted to a value different from the first ratio in response to the comparison.

28. The method of claim 1, wherein the first treatment and the second treatment each comprises a plurality of stimuli distributed over a plurality of regions of the retina located away from a fovea of the eye, each of the plurality of stimuli imaged anterior to the retina and blurred on the retina, wherein the plurality of stimuli are arranged to define a treatment area on the retina.

29. The method of claim 28, wherein the first treatment comprises a first treatment area over a first percentage of the retina and the second treatment comprises a second treatment over a second percentage of the retina and wherein the second treatment area is adjusted to an amount different from the first treatment area in response to the comparison.

30. The method of claim 29, wherein the first treatment area comprises a first percentage of a total area of the retina and the second treatment area comprises a second percentage of the total area of the retina and wherein the second percentage is adjusted to an amount different from the first percentage in response to the comparison and optionally wherein the first percentage and the second percentage are within a range from about 15% to about 65% of the total area of the retina.

31. The method of claim 29, wherein the first treatment area and the second treatment area comprise annular areas with the fovea located outside the annular areas.

32. The method of claim 1, wherein the first treatment comprises a first wavelength of light corresponding to a first peak sensitivity of cones of the eye and the second treatment comprises a second wavelength of light corresponding to a second peak sensitivity of the cones of the eye and optionally wherein the peak sensitivity of the cones correspond to light at a wavelength of within a range from about 420 nm to about 440 nm, from about 534 nm to about 545 nm or 564 to about 580 nm.

33. The method of claim 32, wherein the first peak corresponds to a first range and the second peak corresponds to a second range different from the first range in response to the comparison.

34. The method of claim 1, wherein the first light treatment comprises a first distribution of wavelengths and the second light treatment comprises a second

distribution of wavelengths, wherein the second distribution differs from the first distribution in response to the comparison.

35. The method of claim 34, wherein the first distribution of wavelengths corresponds to a first temperature and the second distribution corresponds to a second temperature and optional wherein the first temperature and the second temperature are within a range from about 5000 degrees Kelvin to about 11,000 degrees Kelvin.

36. The method of claim 1, wherein the first treatment comprises a first duration on a first day and the second treatment comprises a second duration on a second day, the second duration different from the first duration in response to the comparison.

37. The method of claim 36, wherein the first duration is within a range from 1 hour to 8 hours and the second duration is within a range from 1 hour to 8 hours and optionally within ranges from 1.5 to 3 hours.

38. The method of claim 1, wherein the first treatment occurs at a first local time of day and the second light treatment occurs at a second time of day different from the first time of day in response to the comparison.

39. The method of claim 38, wherein the first treatment occurs for a first duration at the first local time and the second treatment occurs at the second local time for a second duration, the first duration on the first day at the first local time not overlapping with the second duration on the second day at the second local time in response to the comparison.

40. The method of claim 38, wherein the time of day is within a range from 7 am to noon local time or within a range from 5 pm to midnight local time.

41. The method of claim 38, wherein the second local time of day differs from the first local time of day in response to the comparison.

42. The method of claim 1, wherein the first treatment projects a first image of a stimulus anterior to the retina with a first amount of astigmatism and the second treatment projects a second image anterior to the retina with a second amount of astigmatism.

43. The method of claim 42, wherein the first amount of astigmatism differs from the second amount of astigmatism in response to the comparison.

44. The method of claim 42, wherein the first amount of astigmatism is within a first range from 0.5 D to 4 D and the second amount of astigmatism is within a second range from 0.5D to 4D.

45. The method of claim 1, wherein the eye has been diagnosed as having a progression of myopia within a range from 0.25 D to 1.5 D per year and wherein the progression of myopia is decreased by at least 0.25 D.

46. The method of claim 45, wherein the progression of myopia is greater than 0.6 D per year and wherein the progression of myopia is decreased by an amount within a range from 0.6D to 0.9 D per year.

47. The method of claim 1, wherein the first treatment comprises a first stimulus projected anterior to the retina with a first intensity and the second stimulus comprises a second stimulus projected anterior to the retina with a second intensity.

48. The method of claim 47, wherein the second intensity differs from the first intensity in response to the comparison.

49. The method of claim 47, the first intensity and the second intensity each comprises a brightness within a range 1 to 1000 Trolands.

50. The method of claim 47, wherein the first intensity and the second intensity each comprises a luminance with in a range from 100 to 50,000 nits or within a range from 1 to 10,000 nits.

51. The method of claim 1, wherein the first treatment comprises a first plurality of stimuli projected anterior to the retina with a first spatial frequency distribution and wherein the second treatment comprises a second plurality of stimuli projected anterior to the retina with a second spatial frequency distribution.

52. The method of claim 51, wherein the second spatial frequency distribution differs from the first spatial frequency distribution in response to the comparison.

53. The method of claim 52, wherein each of the first and second plurality of stimuli comprises a length, edges, and an intensity profile distribution to generate spatial frequencies in a range of $1X10^{-1}$ to $2.5X10^{1}$ cycles per degree as imaged into the eye anterior or posterior to the retina and optionally within a range from $1X10^{-1}$ to $1X10^{1}$ cycles per degree.

54. The method of claim 51, wherein each of the first and second plurality of stimuli as imaged in the eye comprises a spatial frequency distribution providing a decrease in spatial frequency amplitude with an increase in spatial frequency for a range of spatial frequencies from about $1X10^{-1}$ to about $2.5X10^{1}$ cycles per degree and optionally from $1X10^{-1}$ to about $5X10^{0}$ cycles per degree.

55. The method of claim 54, wherein the decrease in spatial frequency intensity is within a range from $1/(\text{spatial frequency})^{0.5}$ to $1/(\text{spatial frequency})^{2}$ for the

spatial frequency amplitude in arbitrary units and optionally from 1/(spatial frequency) to 1/(spatial frequency)^2 for the spatial frequency amplitude in arbitrary units.

56. The method of claim 54, wherein the range of spatial frequencies is from about $3X10^{-1}$ to about $1.0X10^{1}$ cycles per degree and optionally within a range from about $3X10^{-1}$ to about $2.0X10^{0}$ and further optionally from about $3X10^{-1}$ to about $1.0X10^{0}$.

57. The method of claim 1, wherein the first light treatment projects a first image of a first pulsed stimulus and wherein the second light treatment projects a second image of a second pulsed stimulus.

58. The method of claim 57, wherein first pulsed stimulus comprises a first duty cycle and the second pulsed stimulus comprises a second duty cycle, the second duty cycle different from the first duty cycle in response to the comparison.

59. The method of claim 57, wherein the first pulsed stimulus comprises a first frequency and the second pulsed stimulus comprises a second frequency different from the first frequency in response to the comparison.

60. The method of claim 1, wherein the first light treatment projects a first image of a first stimulus to a first location anterior or posterior to the retina and wherein the second light treatment projects a second stimulus at a second location anterior or posterior to the retina.

61. The method of claim 60, wherein the second location differs from the first location in response to the comparison.

62. The method of claim 61, wherein the first location is on a first side of the retina and the second location is on a second side of the retina opposite the first side in response to the comparison.

63. The method of claim 1, wherein the optical property comprises one or more of an axial length, a binocularly measured axial length, a refraction, a manifest refraction, a cycloplegic refraction, an auto-refraction, a binocular auto refraction, an open field auto refraction, a binocular open field auto refraction, a scanning slit auto refraction, a wavefront map, a wavefront coefficient, a sphere coefficient, a cylinder coefficient, a coma, a spherical aberration, or a trefoil.

64. The method of claim 63, wherein the optical property comprises refractive data and wherein a change in the refractive data between the first time and the second time corresponds to a change in axial length of the eye.

65. The method of claim 64, wherein the change in axial length is determined in response to the change in the refractive data.

66. The method of claim 1, wherein the eye is provided with a binocular fixation stimulus to measure the optical property at the first time and the second time.

67. The method of claim 1, wherein the eye is treated with a fellow eye for the first treatment and the second treatment.

68. The method of claim 1, wherein a first refractive error of the eye is corrected for during the first treatment with a first refractive correction to provide viewing over a first clear central zone and a second refractive error of the eye is corrected for the second treatment with a second refractive correction over a second clear central zone.

69. The method of claim 68, wherein the first refractive correction differs from the second refractive correction in response to the comparison.

70. An apparatus to decrease a progression of myopia of an eye, the apparatus comprising:

a light source to provide an image of a first stimulus anterior to a retina of the eye at a location away from the retina; and

a processor operatively coupled to the light source to adjust the stimulus to a second stimulus in response to a change in an optical property of the eye from the first stimulus.

71. The apparatus of claim 70, wherein the processor is configured to generate a comparison of the optical property of the eye at a first time prior to a first light treatment with the first stimulus to the optical property of the eye at a second time after the first light treatment and to configure the second stimulus in response to the comparison.

72. The apparatus of claim 71, wherein the light source comprises a display and the first stimulus and the second stimulus are each presented on the display and wherein the second stimulus presented on the display is configured with one or more of a location, a size, a spatial frequency distribution, an intensity, or an intensity relative to a background on the display in response to the comparison.

73. The apparatus of claim 72, wherein the one or more of the location, the size, the spatial frequency distribution, the intensity, or the intensity relative to a background on the display of the second stimulus differs from one or more of a location,

a size, a spatial frequency distribution, an intensity, or an intensity relative to a background on the display of the first stimulus.

74. The apparatus of claim 72, wherein the first stimulus comprises a plurality of first stimuli and the second stimulus comprises a plurality of second stimuli and wherein each of the second plurality of stimuli is configured in response to the comparison.

75. The apparatus of claim 70, further comprising one or more optical structures to project the image of the first stimulus and the second stimulus anterior to the retina and away from the fovea to provide a blurred images of the first stimulus and the second stimulus on the retina.

76. The apparatus of claim 75, wherein the one or more optical structures comprises one or more of a lens, a prism, a wedge, a flat, a diffractive optic, a Fresnel lens, a plurality of echelletes, an aspheric profile a liquid crystal, a plurality of lenslets, a plurality of regions of positive optical power, a plurality of annular regions of increased optical or a plurality of gaps extending between regions of increased optical power.

77. The apparatus of claim 75, wherein the one or more optical structures comprises a first optical structure to provide the first stimulus and a second optical structure to provide the second stimulus, the second optical structure configured in response to the comparison.

78. The apparatus of claim 77, wherein the second optical structure is configured with one or more of a focal length, a tilt angle, a diffractive pattern, an echelletes pattern, an aspheric profile, a liquid crystal index change, locations of regions of positive optical power, or gaps in response to the comparison.

79. The apparatus of claim 70, wherein the processor configured with instructions to perform the method of any one of the preceding method claims.

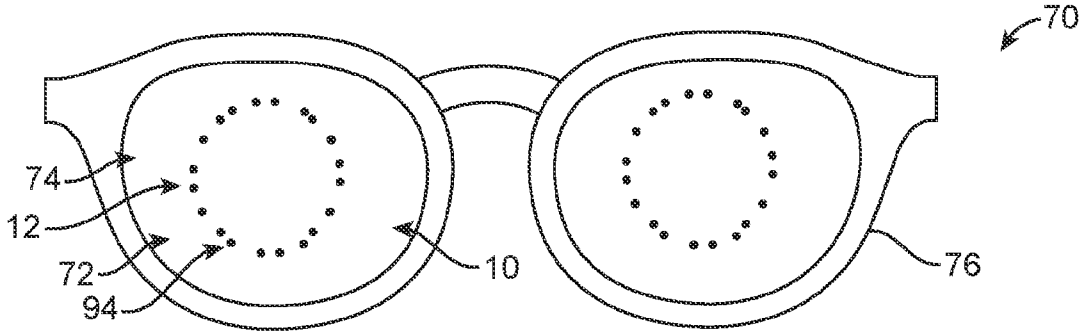

FIG. 1A

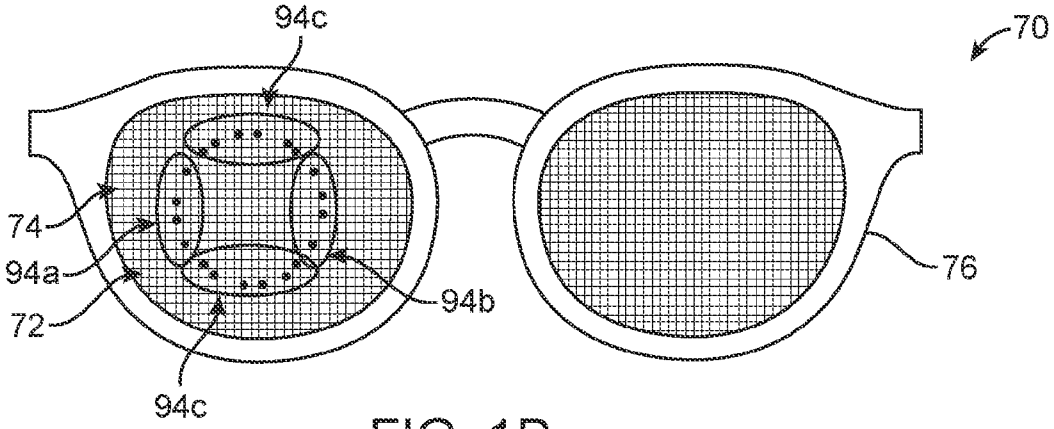

FIG. 1B

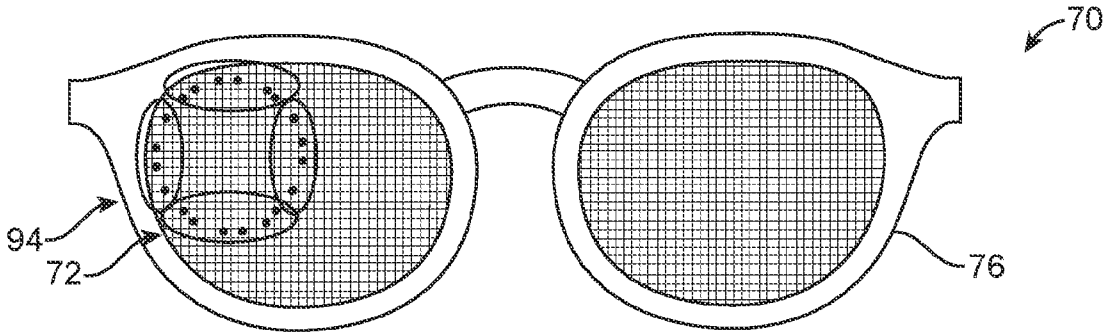

FIG. 1C

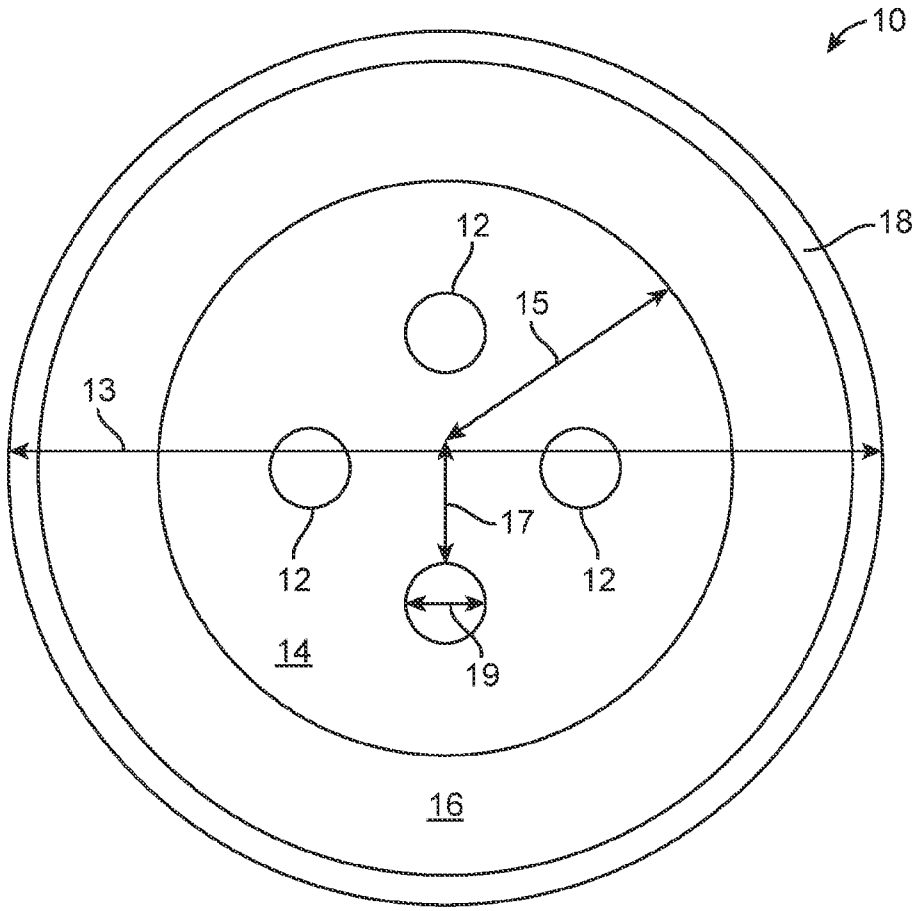

FIG. 2A

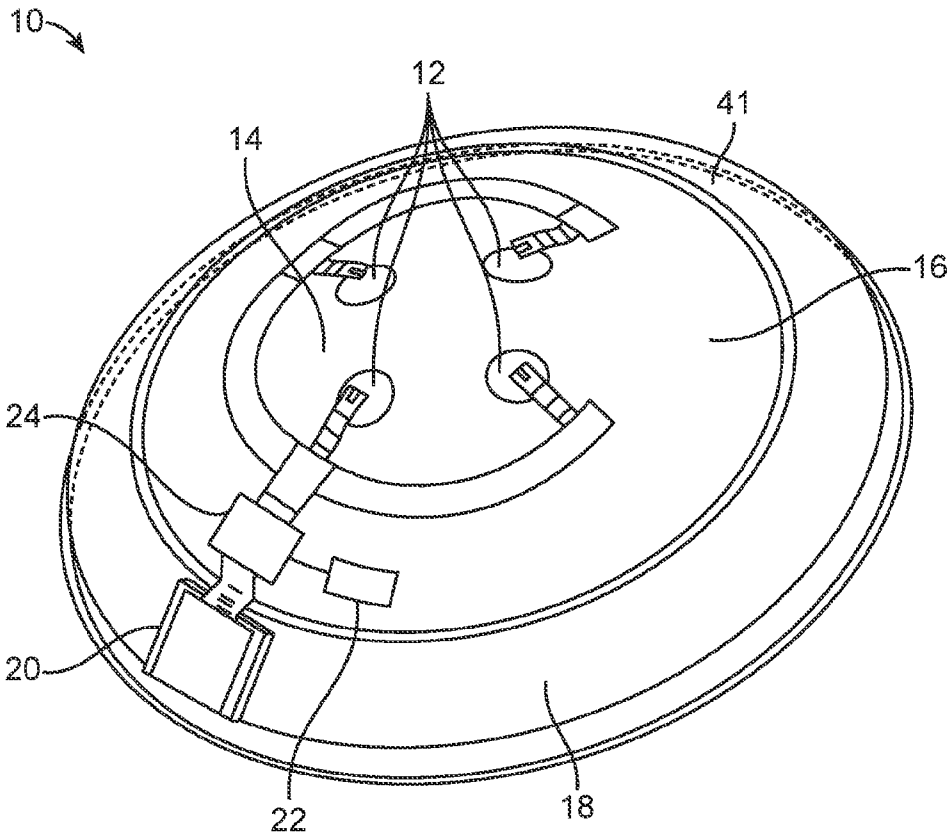

FIG. 2B

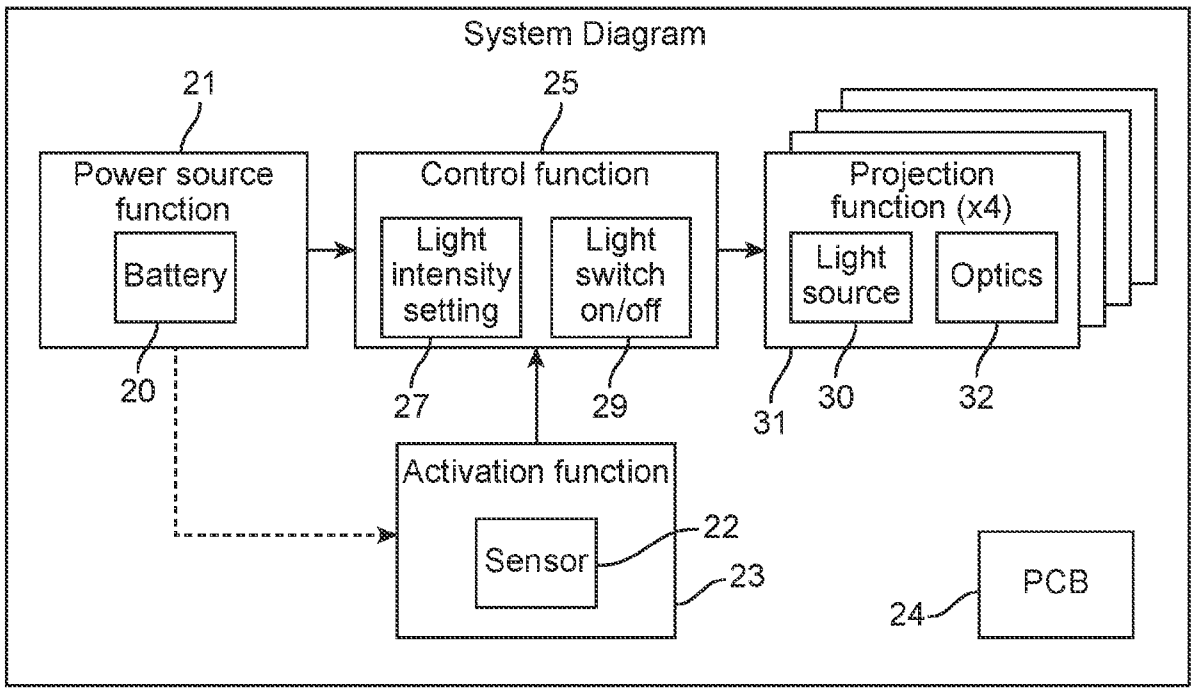
System Diagram
21
25
Power source function
Battery
Control function
Light intensity setting
Light switch on/off
Projection function (x4)
Light source
Optics
20
27
29
31
30
32
Activation function
Sensor
22
23
24
PCB

FIG. 3

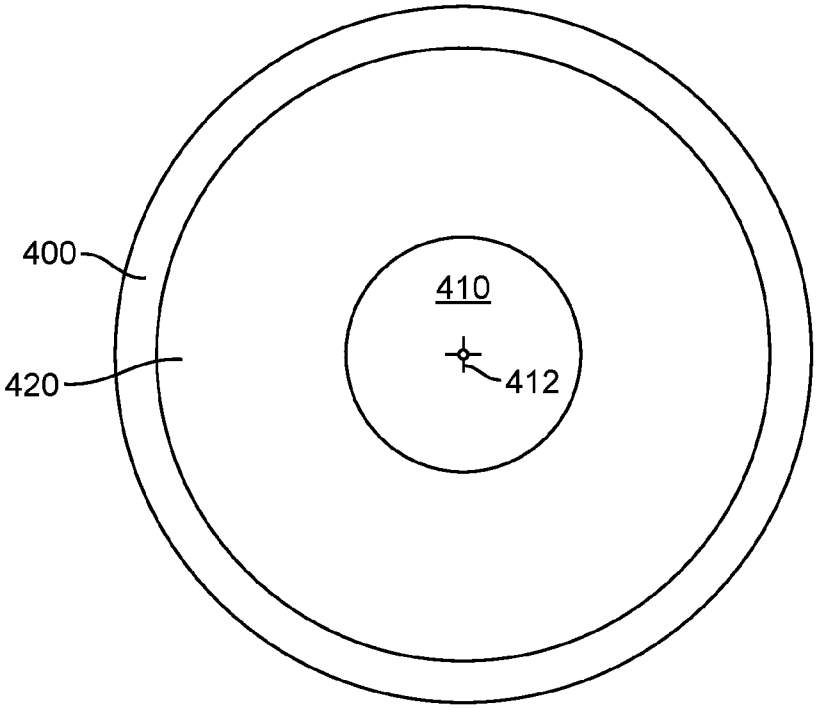

FIG. 4

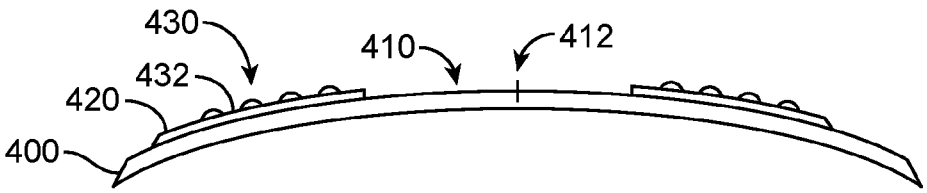

FIG. 5

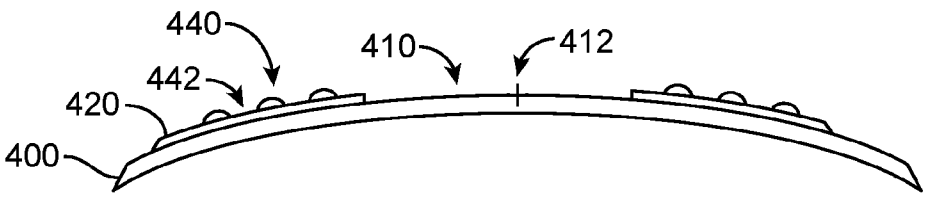

FIG. 6

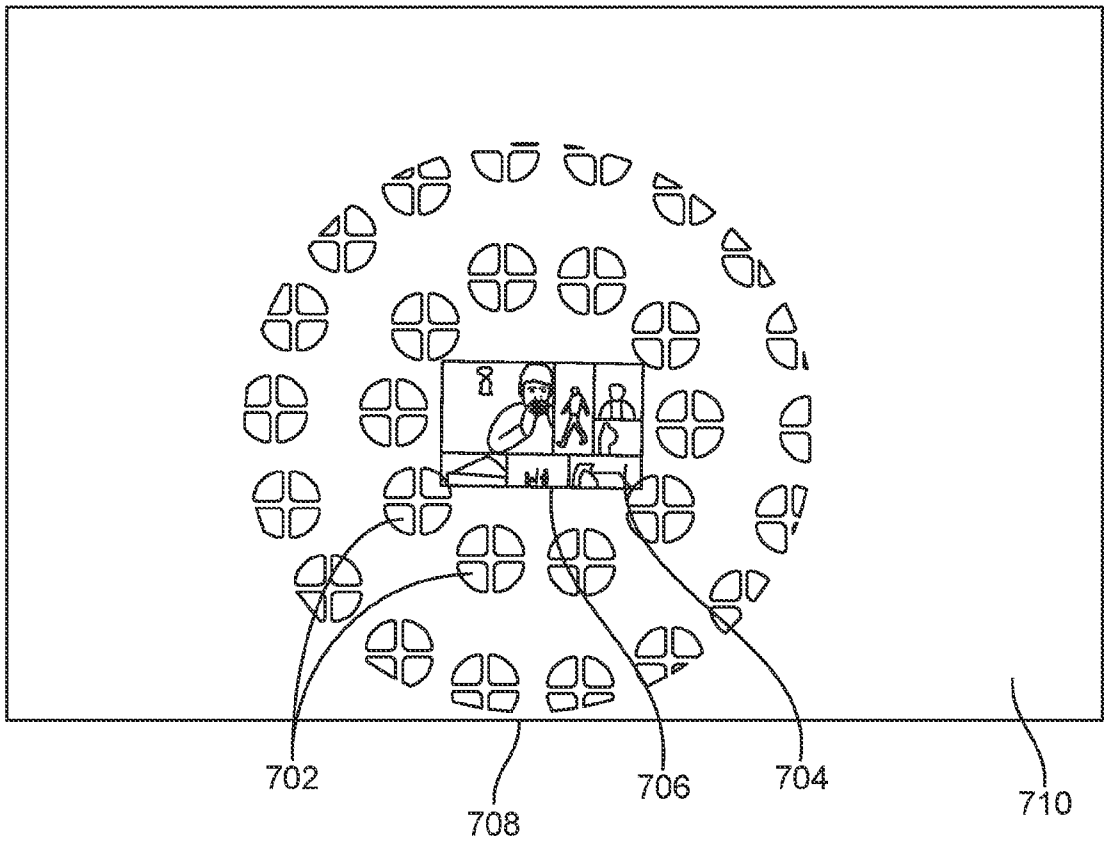

FIG. 7

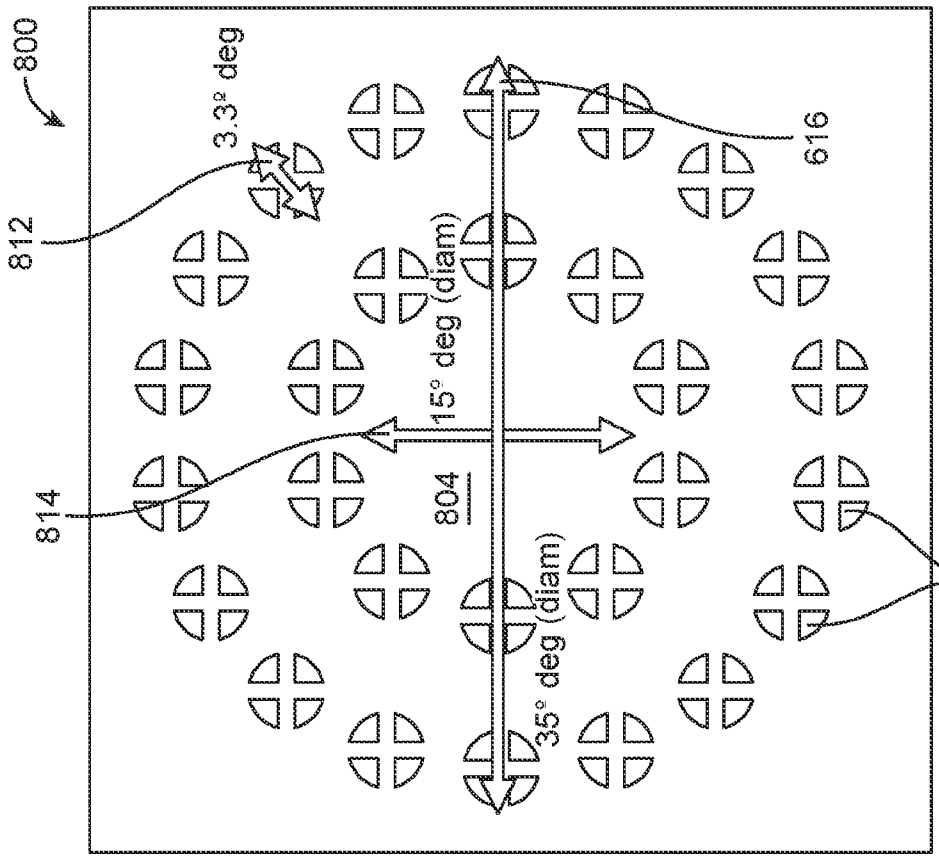
800
812
3.3° deg
616
814
15° deg (diam)
804
35° deg (diam)
502

FIG. 8B

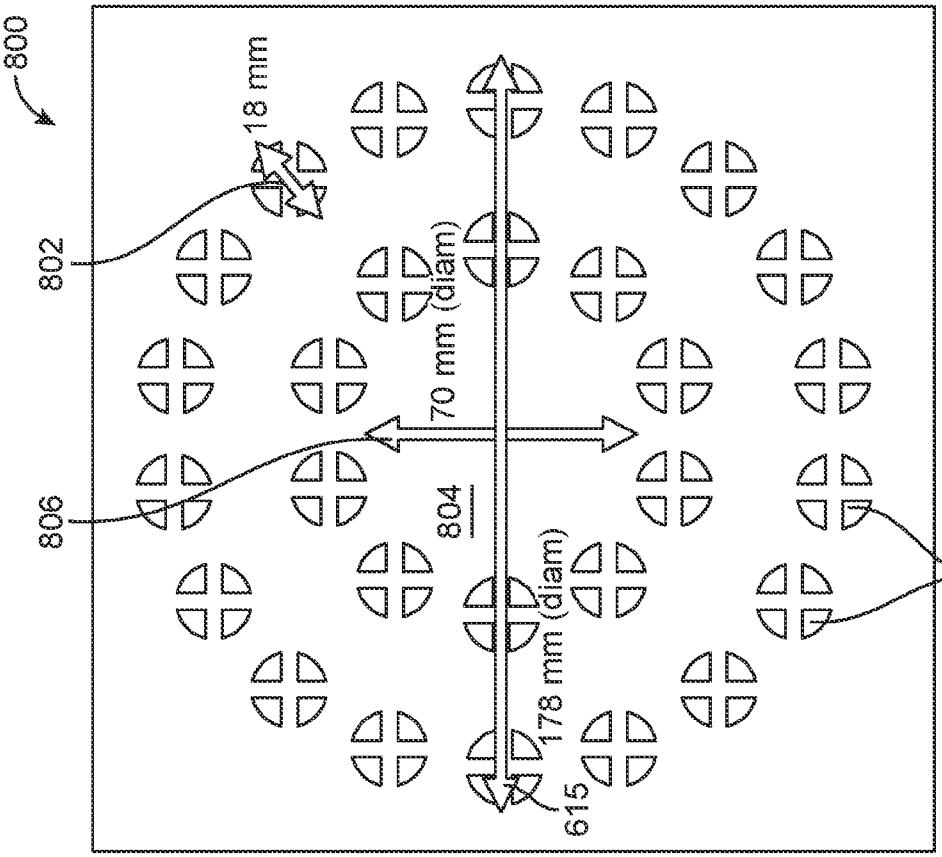
800
802
18 mm
70 mm (diam)
806
804
178 mm (diam)
615
502

FIG. 8A

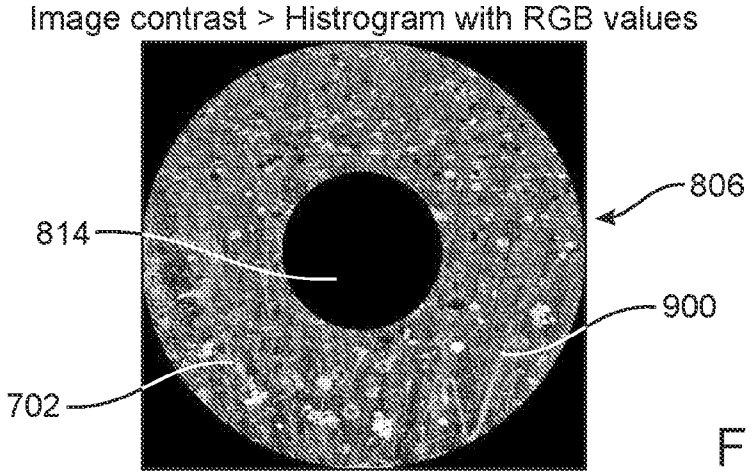
Image contrast > Histrogram with RGB values
806
814
900
702

FIG. 9

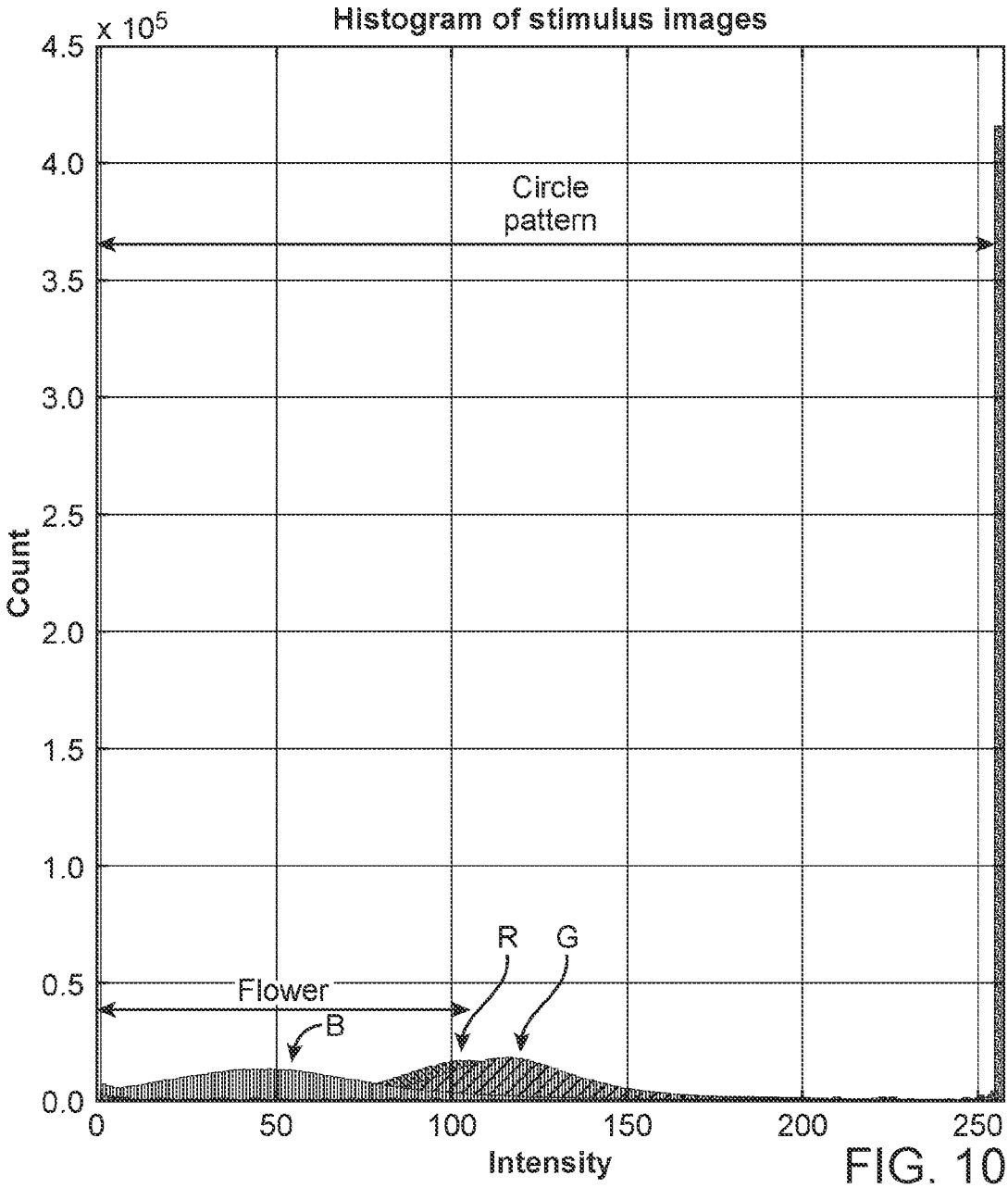
Histogram of stimulus images
x 10^5
4.5
4.0
3.5
3.0
2.5
2.0
1.5
1.0
0.5
0.0
Count
Circle pattern
Flower
R
G
B
0
50
100
150
200
250
Intensity

FIG. 10

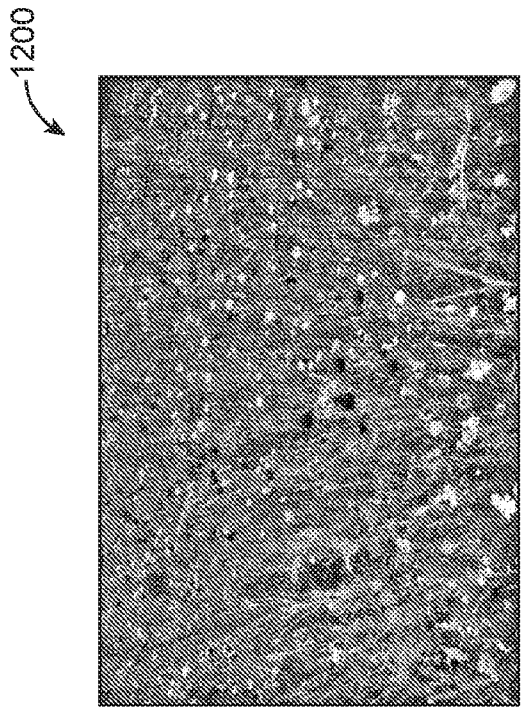

FIG. 12

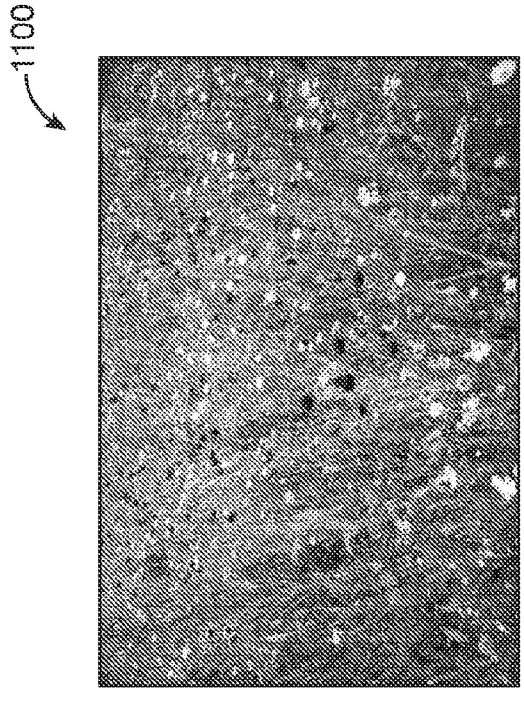

FIG. 11

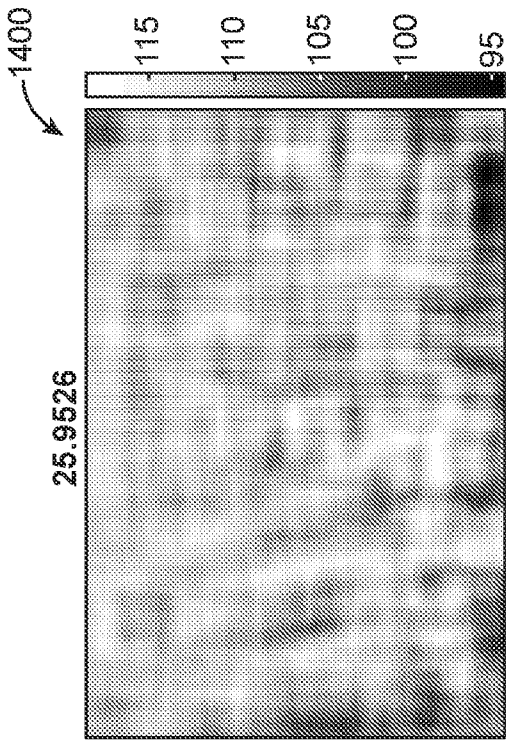

FIG. 14

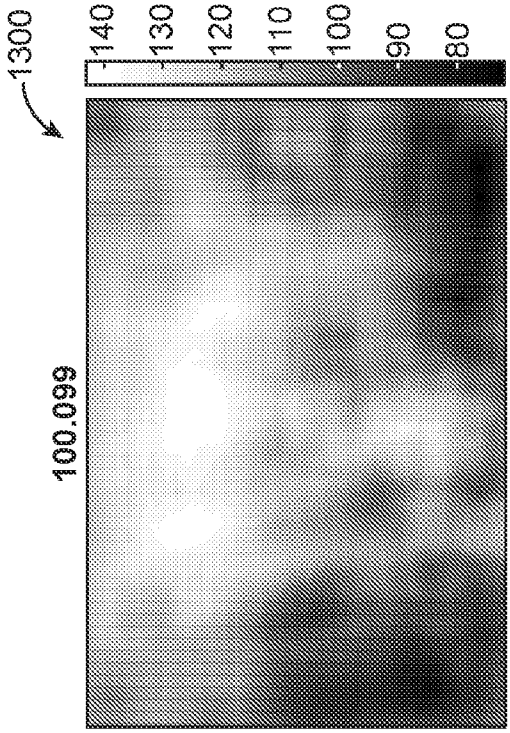

FIG. 13

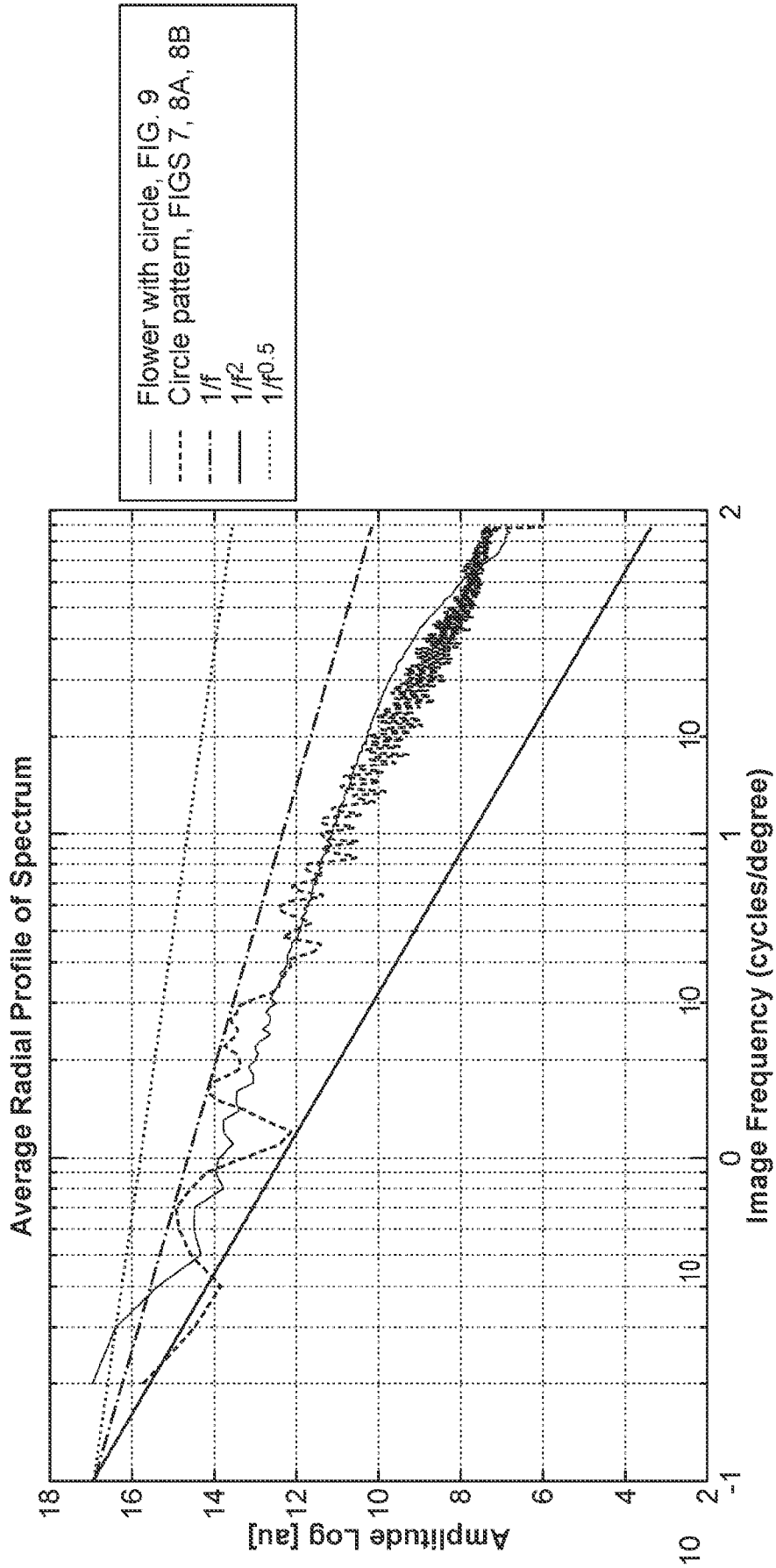
Flower with circle, FIG. 9
Circle pattern, FIGS 7, 8A, 8B
1/f
1/f^2
1/f^0.5
Average Radial Profile of Spectrum
Amplitude Log [au]
Image Frequency (cycles/degree)
18
16
14
12
10
8
6
4
2
10^-1
10^0
10^1
10^2

FIG. 15

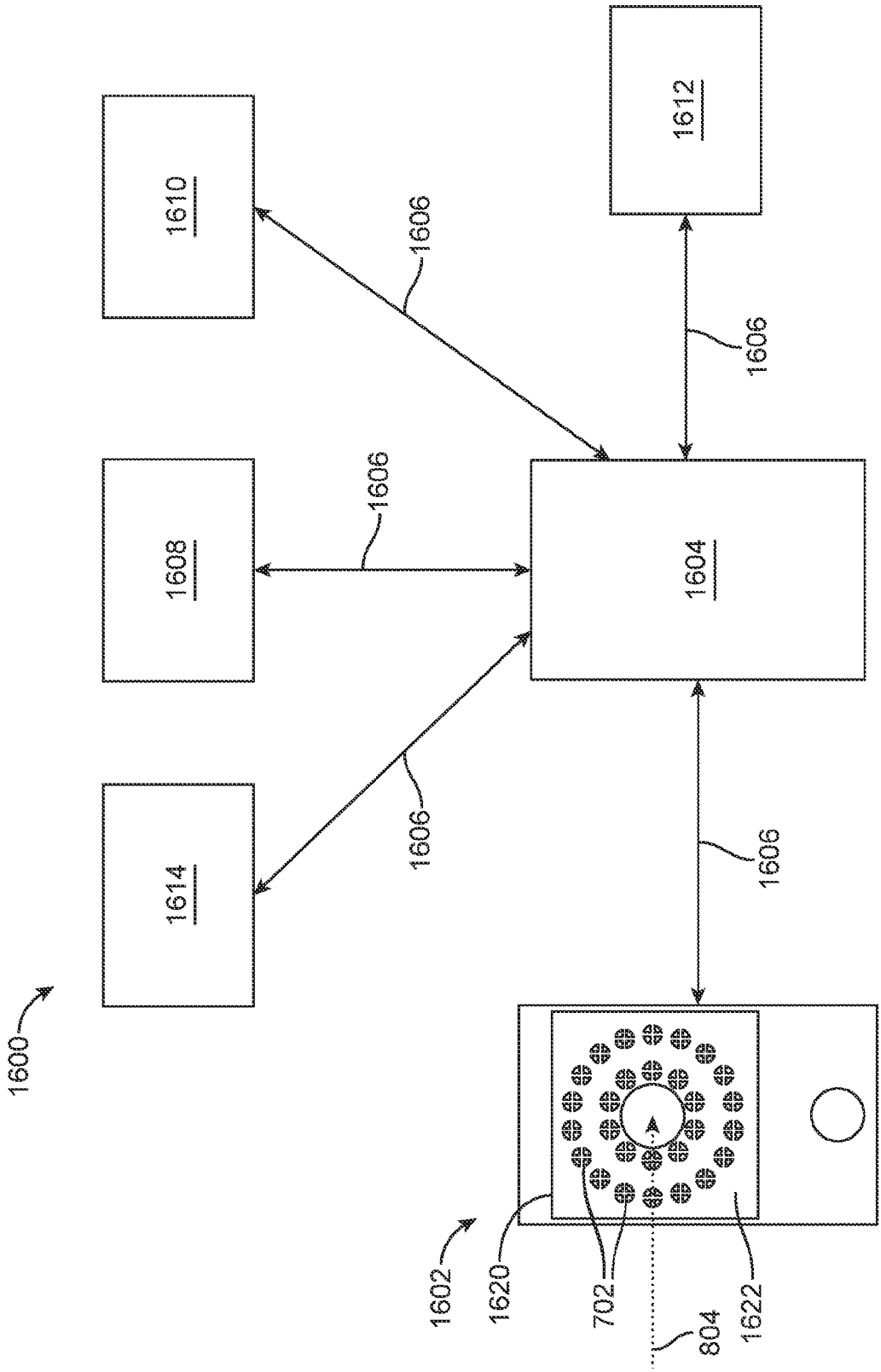

FIG. 16

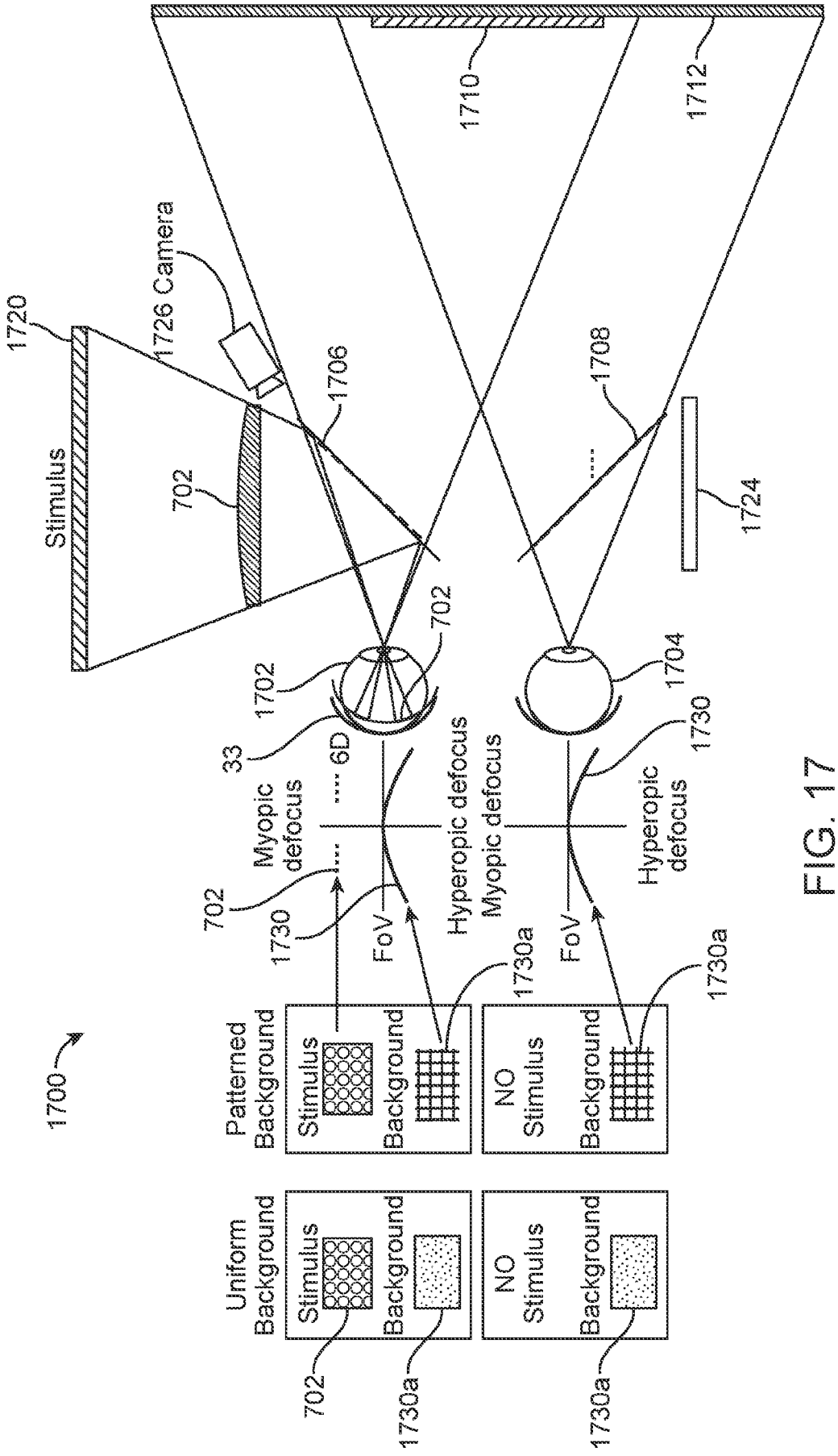
1700
Uniform Background
Stimulus
Background
NO Stimulus
Background
Patterned Background
Stimulus
Background
NO Stimulus
Background
702
1730a
1730a
1730a
1730
702
Myopic defocus
6D
Hyperopic defocus
Myopic defocus
Hyperopic defocus
FoV
FoV
33
1702
702
1704
1730
1720
1726 Camera
1706
1708
1710
1712
1724
Stimulus
702

FIG. 17

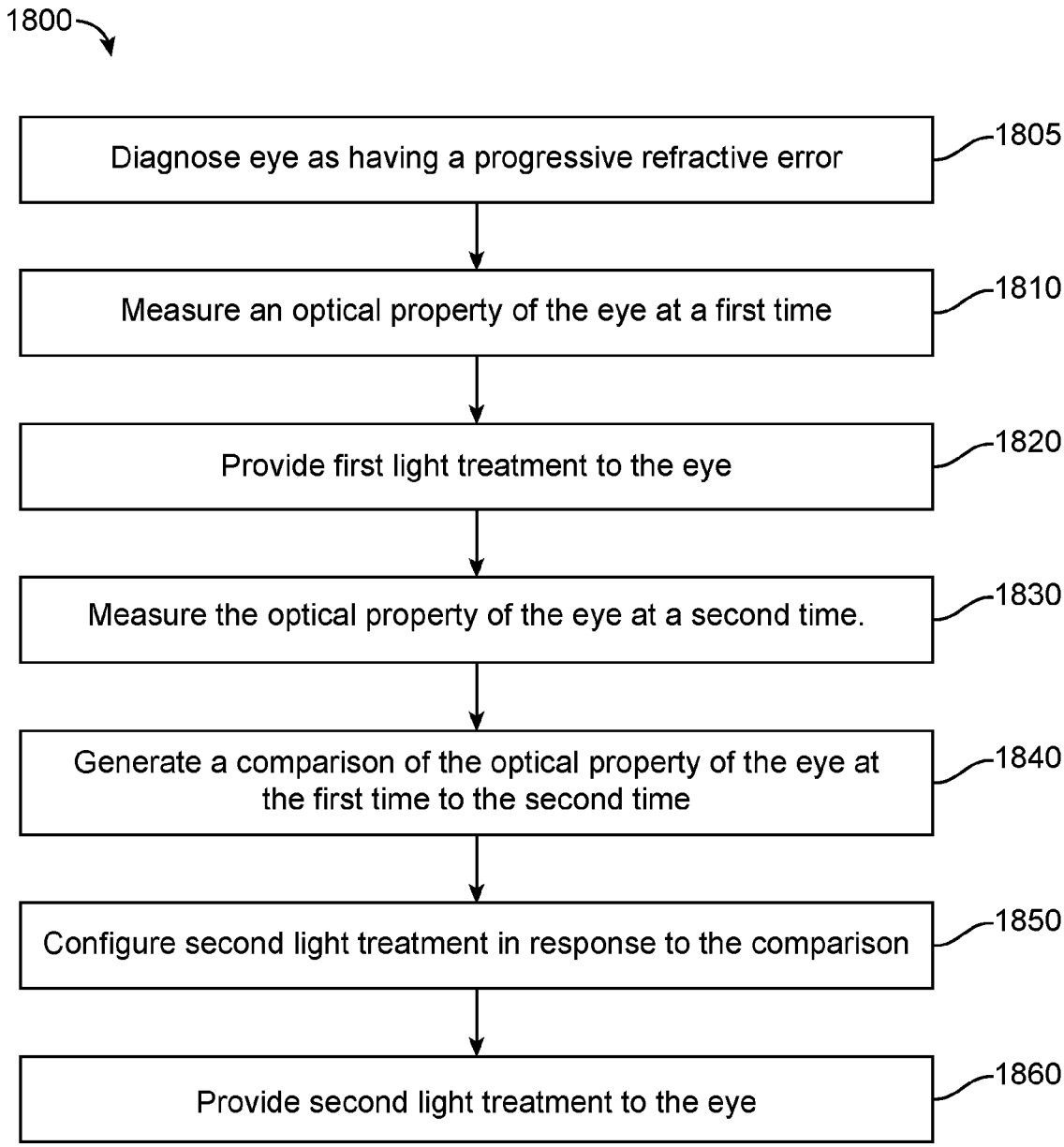
1800
Diagnose eye as having a progressive refractive error
1805
Measure an optical property of the eye at a first time
1810
Provide first light treatment to the eye
1820
Measure the optical property of the eye at a second time.
1830
Generate a comparison of the optical property of the eye at the first time to the second time
1840
Configure second light treatment in response to the comparison
1850
Provide second light treatment to the eye
1860

FIG. 18

INTERNATIONAL SEARCH REPORT

International application No.
PCT/US 22/77945

A. CLASSIFICATION OF SUBJECT MATTER

IPC - INV. A61F 9/00 (2022.01)
ADD. A61N 5/06 (2022.01)

CPC - INV. A61F 9/00, A61F 9/0079, A61N 5/06
ADD. G02C 2202/24, A61N 2005/0626, A61N 2005/0642

According to International Patent Classification (IPC) or to both national classification and IPC

B. FIELDS SEARCHED

Minimum documentation searched (classification system followed by classification symbols)
See Search History document

Documentation searched other than minimum documentation to the extent that such documents are included in the fields searched
See Search History document

Electronic data base consulted during the international search (name of data base and, where practicable, search terms used)
See Search History document

C. DOCUMENTS CONSIDERED TO BE RELEVANT

Category*	Citation of document, with indication, where appropriate, of the relevant passages	Relevant to claim No.
X --- Y	US 2021/0031051 A1 (ACUCELA INC.) 04 February 2021 (04.02.2021) entire document, especially Fig. 2C and 13; para [0013]-[0015], [0055], [0062]-[0064], [0066], [0069], [0072], [0075], [0079], [0080], [0084], [0085], [0088], [0093], [0094], [0097], [0102], [0104], [0105], [0110]-[0113], [0114], [0132], [0133], [0136], [0162], [0169], [0174], [0233], [0234], [0263]	1-20, 25-34, 36-56, 60-79 --- 21-24, 35, 57-59
Y	US 2018/0136486 A1 (MAGIC LEAP, INC.) 17 May 2018 (17.05.2018) entire document, especially para [0241], [0242], [0269]	21-24
Y	US 2016/0016004 A1 (HUDSON) 21 January 2016 (21.01.2016) entire document, especially para [0022]	35
Y	US 2013/0317487 A1 (LUTTRULL et al.) 28 November 2013 (28.11.2013) entire document, especially para [0015], [0061], [0095]	57-59

☐ Further documents are listed in the continuation of Box C. ☐ See patent family annex.

* Special categories of cited documents:
"A" document defining the general state of the art which is not considered to be of particular relevance
"D" document cited by the applicant in the international application
"E" earlier application or patent but published on or after the international filing date
"L" document which may throw doubts on priority claim(s) or which is cited to establish the publication date of another citation or other special reason (as specified)
"O" document referring to an oral disclosure, use, exhibition or other means
"P" document published prior to the international filing date but later than the priority date claimed
"T" later document published after the international filing date or priority date and not in conflict with the application but cited to understand the principle or theory underlying the invention
"X" document of particular relevance; the claimed invention cannot be considered novel or cannot be considered to involve an inventive step when the document is taken alone
"Y" document of particular relevance; the claimed invention cannot be considered to involve an inventive step when the document is combined with one or more other such documents, such combination being obvious to a person skilled in the art
"&" document member of the same patent family

Date of the actual completion of the international search	Date of mailing of the international search report
18 December 2022	JAN 10 2023
Name and mailing address of the ISA/US Mail Stop PCT, Attn: ISA/US, Commissioner for Patents P.O. Box 1450, Alexandria, Virginia 22313-1450 Facsimile No. 571-273-8300	Authorized officer Kari Rodriquez Telephone No. PCT Helpdesk: 571-272-4300