US 20170165405A1

(19) United States

(12) Patent Application Publication

Muser et al.

(10) Pub. No.: US 2017/0165405 A1

(43) Pub. Date: Jun. 15, 2017

(54) **SYSTEMS AND METHODS FOR APPLYING REDUCED PRESSURE THERAPY**

(71) Applicant: **Smith & Nephew, Inc.**, Memphis, TN (US)

(72) Inventors: **Andrew P. Muser**, Saint Pete Beach, FL (US); **John P. Racette**, Trinity, FL (US); **Mark Schaefer**, Largo, FL (US)

(21) Appl. No.: **15/443,555**

(22) Filed: **Feb. 27, 2017**

Related U.S. Application Data

(62) Division of application No. 15/500,495, filed as application No. PCT/US2014/066441 on Nov. 19, 2014.

(60) Provisional application No. 62/031,704, filed on Jul. 31, 2014.

Publication Classification

(51) **Int. Cl.**

A61M 1/00 (2006.01)

A61F 13/00 (2006.01)

(52) **U.S. Cl.**

CPC ***A61M 1/0001*** (2013.01); ***A61F 13/00068*** (2013.01); ***A61M 1/0025*** (2014.02); *A61M 2205/15* (2013.01); *A61M 2205/18* (2013.01); *A61M 2205/3365* (2013.01); *A61M 2205/3344* (2013.01); *A61M 2205/3584* (2013.01); *A61M 2205/505* (2013.01); *A61M 2205/502* (2013.01); *A61M 2205/587* (2013.01); *A61M 2205/581* (2013.01); *A61M 2205/52* (2013.01); *A61M 2205/50* (2013.01); *A61M 2205/3334* (2013.01); *A61F 2013/00357* (2013.01)

(57) **ABSTRACT**

Embodiments of a negative pressure wound therapy systems and methods for operating the systems are disclosed. In some embodiments, a system includes a pump assembly, canister, and a wound dressing configured to be positioned over a wound. The pump assembly, canister, and the wound dressing can be fluidically connected to facilitate delivery of negative pressure to a wound. The pump assembly can present graphical user interface screens for controlling and monitoring delivery of negative pressure. The system can be configured to efficiently deliver negative pressure and to detect and indicate presence of certain conditions, such as low pressure, high pressure, leak, canister full, and the like. Monitoring and detection of operating condition can be performed by measuring one or more operational parameters, such as pressure, flow rate, and the like.

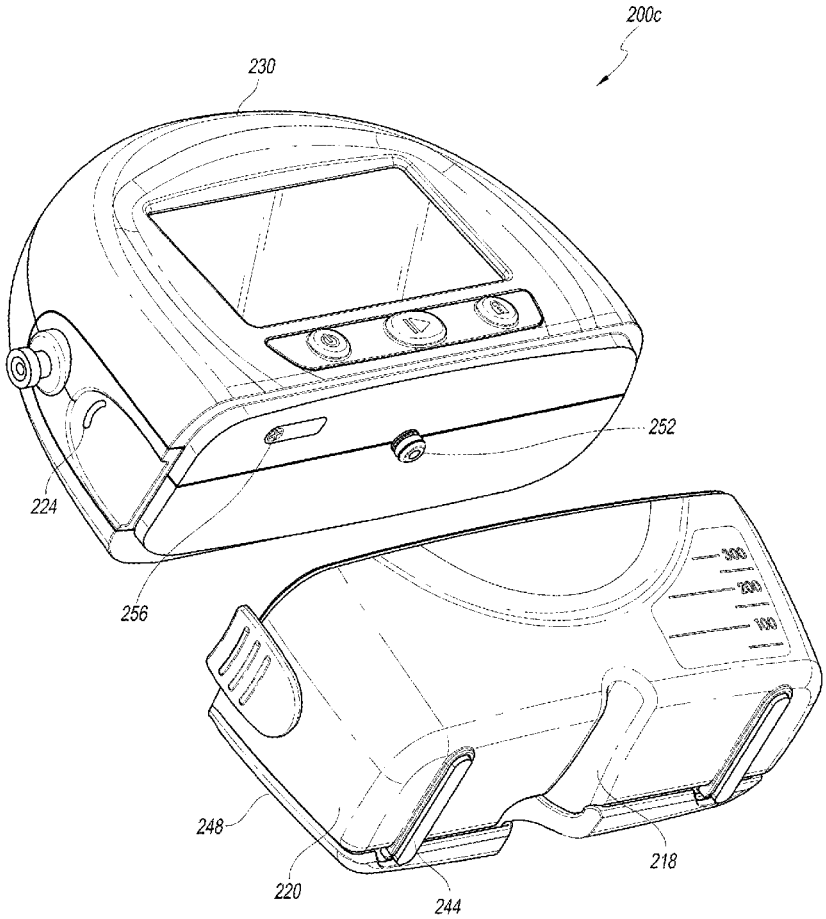

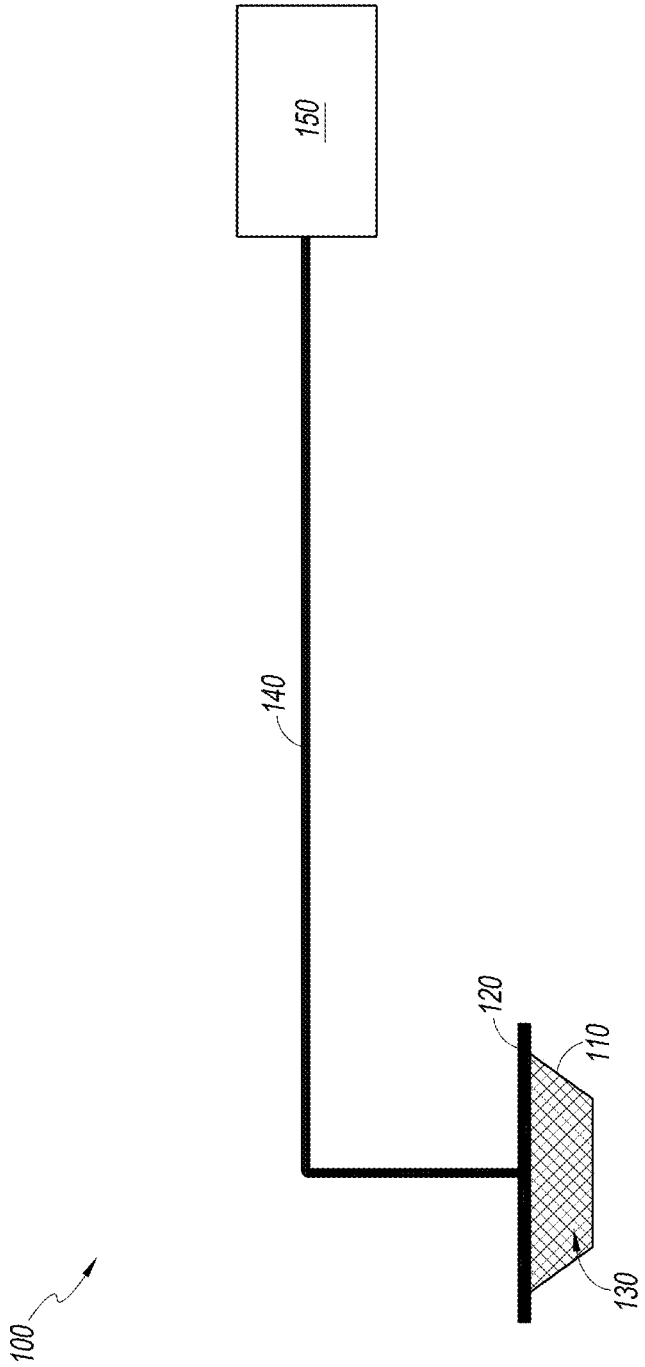

FIG. 1

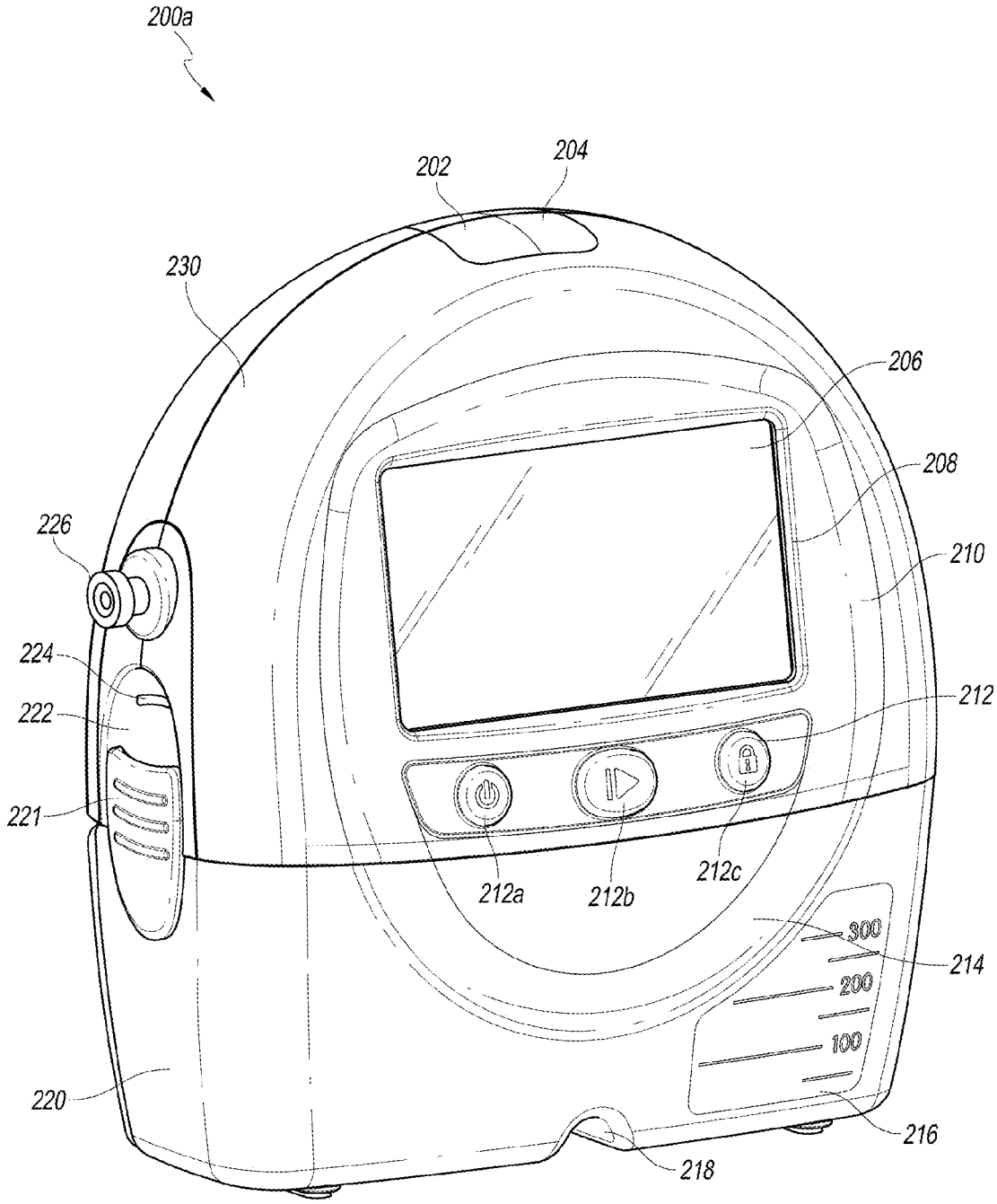
200a
202
204
230
206
208
210
226
224
222
212
221
212a
212b
212c
300
214
200
100
220
216
218

FIG. 2A

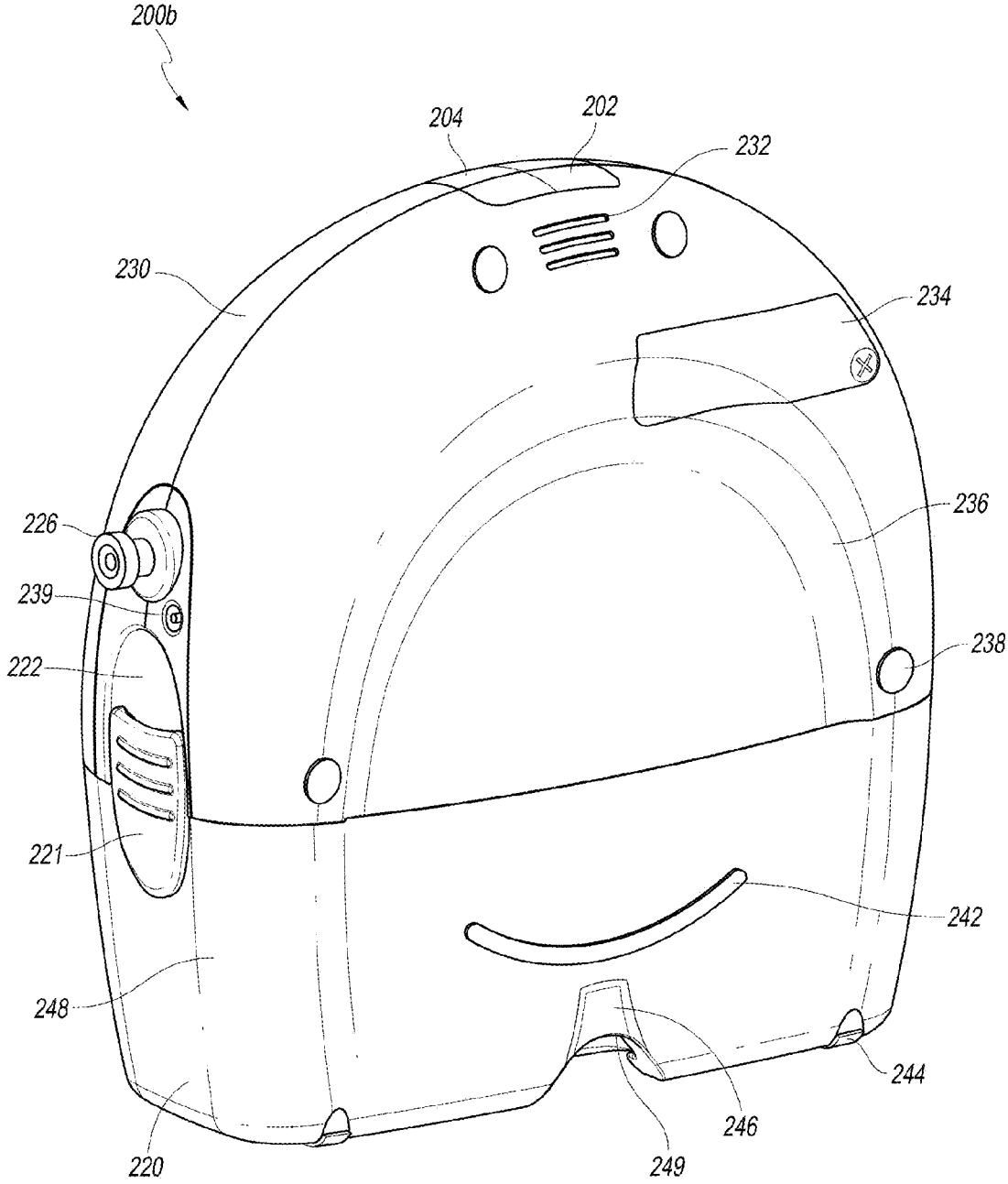
200b
204
202
232
230
234
236
226
239
238
222
221
242
248
244
246
220
249

FIG. 2B

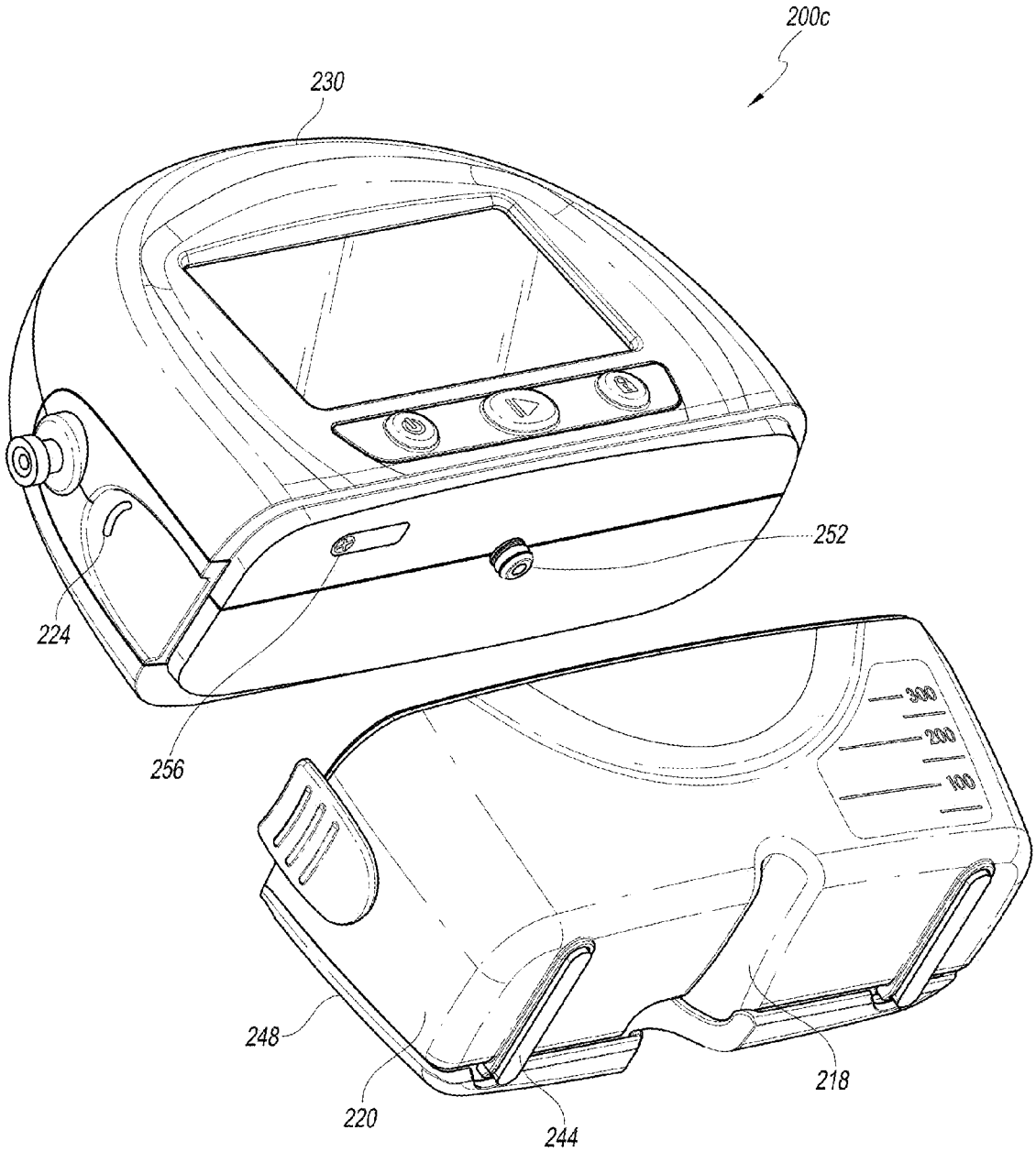

FIG. 2C

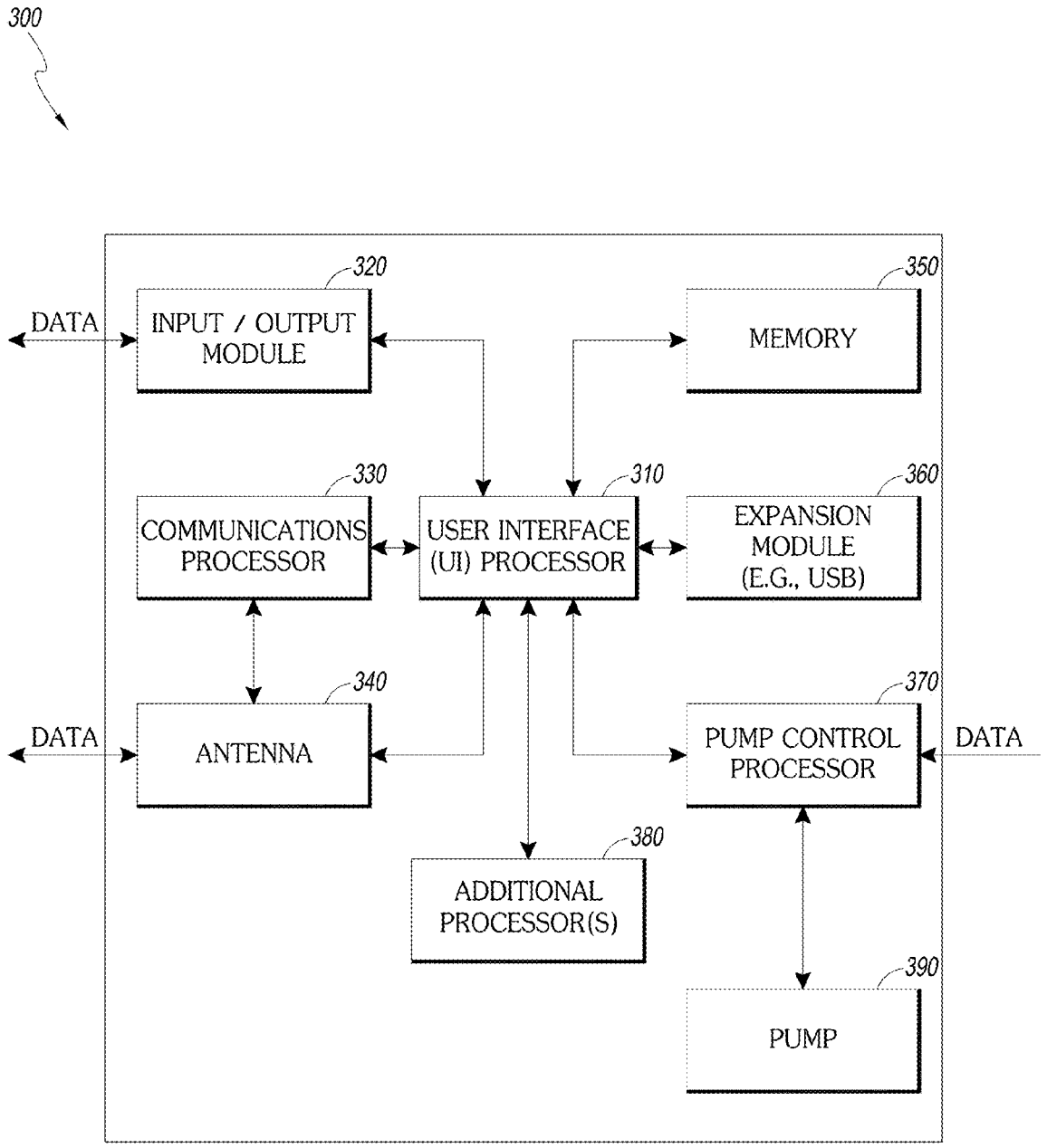
300
320
DATA
INPUT / OUTPUT MODULE
350
MEMORY
330
COMMUNICATIONS PROCESSOR
310
USER INTERFACE (UI) PROCESSOR
360
EXPANSION MODULE (E.G., USB)
340
DATA
ANTENNA
370
PUMP CONTROL PROCESSOR
DATA
380
ADDITIONAL PROCESSOR(S)
390
PUMP

FIG. 3

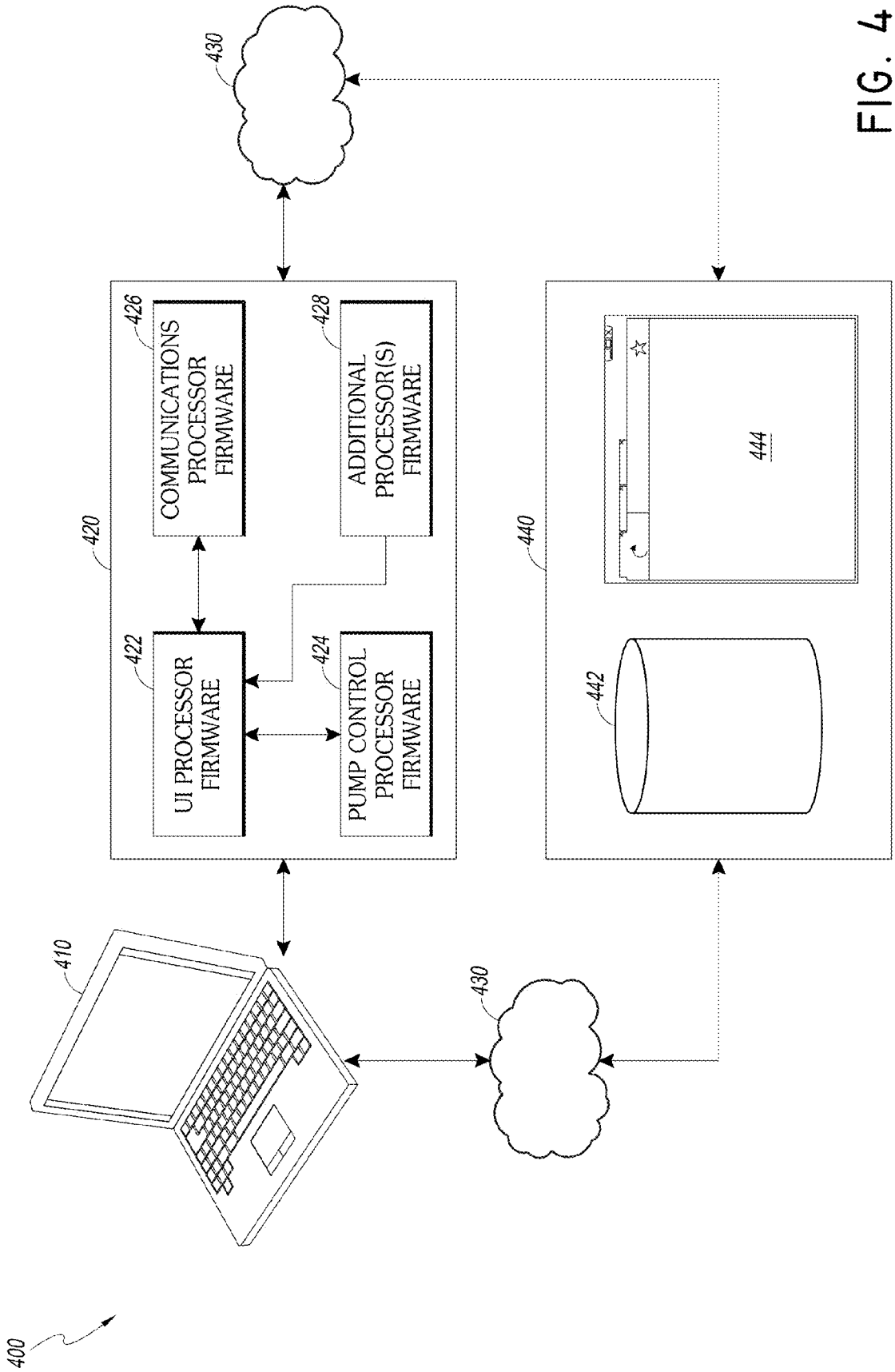
400
410
420
422
UI PROCESSOR FIRMWARE
424
PUMP CONTROL PROCESSOR FIRMWARE
426
COMMUNICATIONS PROCESSOR FIRMWARE
428
ADDITIONAL PROCESSOR(S) FIRMWARE
430
430
440
442
444

FIG. 4

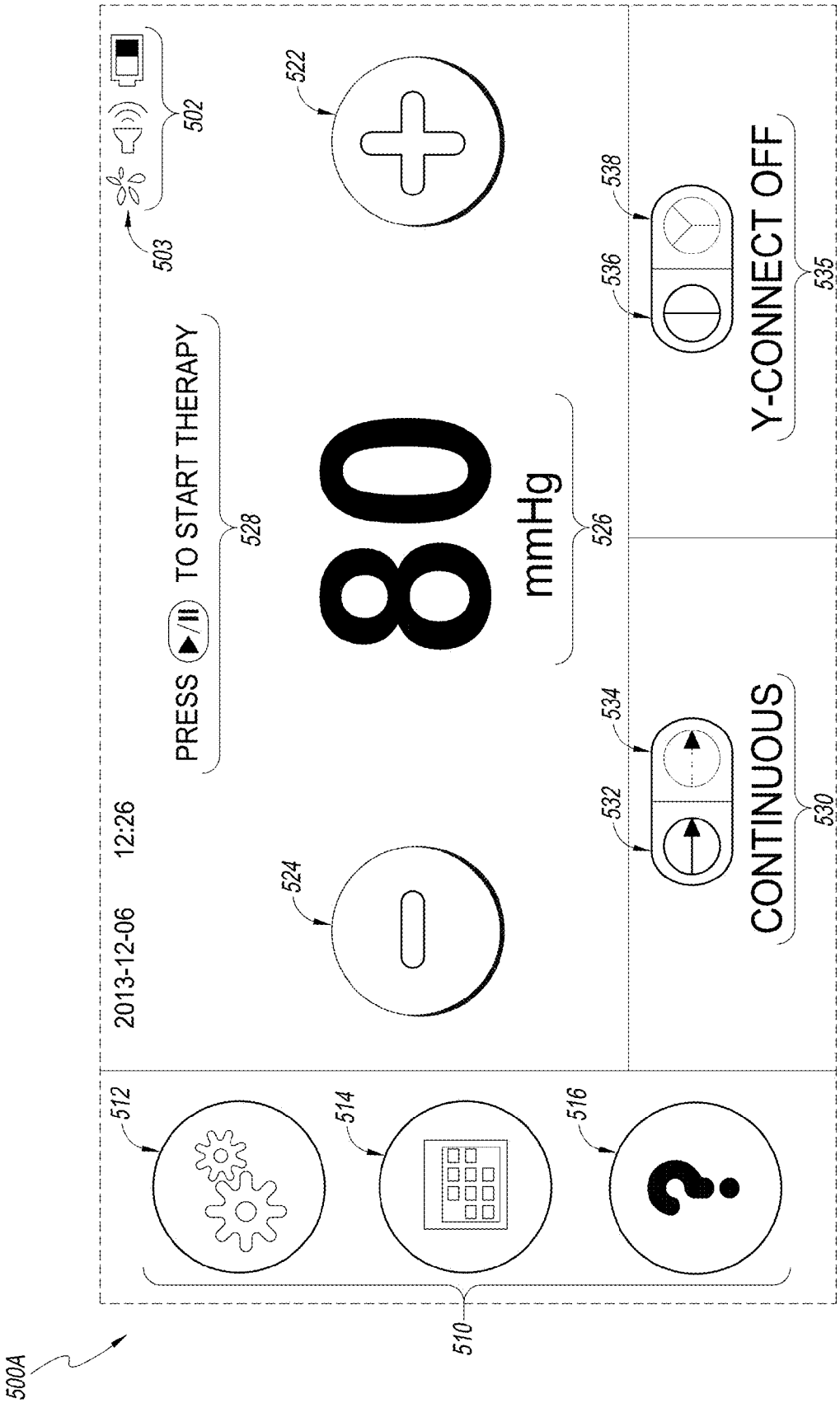
500A
510
512
514
516
2013-12-06
12:26
524
PRESS ▶/II TO START THERAPY
528
80
mmHg
526
522
503
502
532
534
CONTINUOUS
530
536
538
Y-CONNECT OFF
535

FIG. 5A

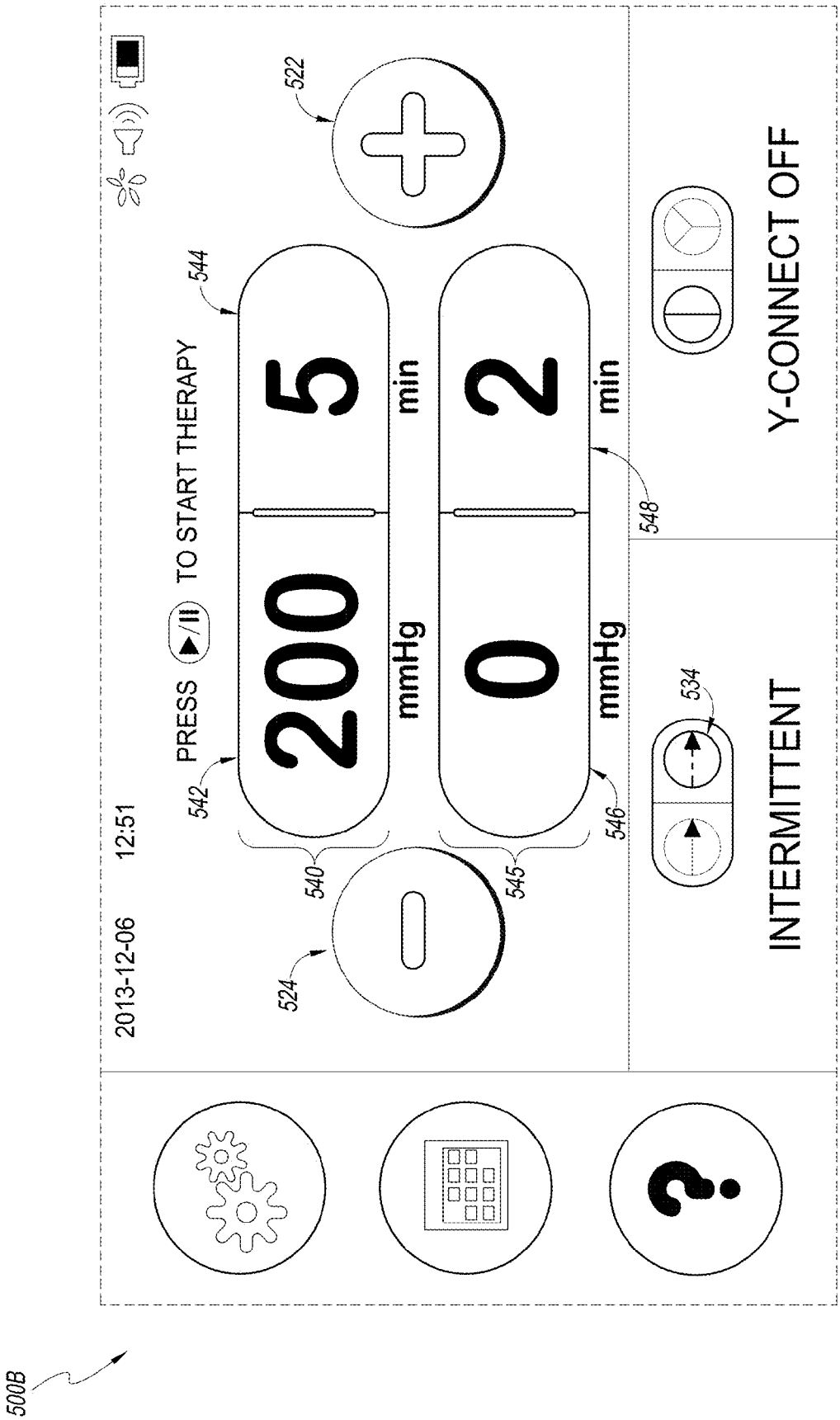
2013-12-06
12:51
PRESS ▶/II TO START THERAPY
200
mmHg
5
min
0
mmHg
2
min
INTERMITTENT
Y-CONNECT OFF
522
524
540
542
544
545
546
548
534
500B

FIG. 5B

500C
518
2013-12-09
14:26
PRESS ▲/II TO STOP THERAPY
529
503
550
120
mmHg
552
Delivering Therapy

FIG. 5C

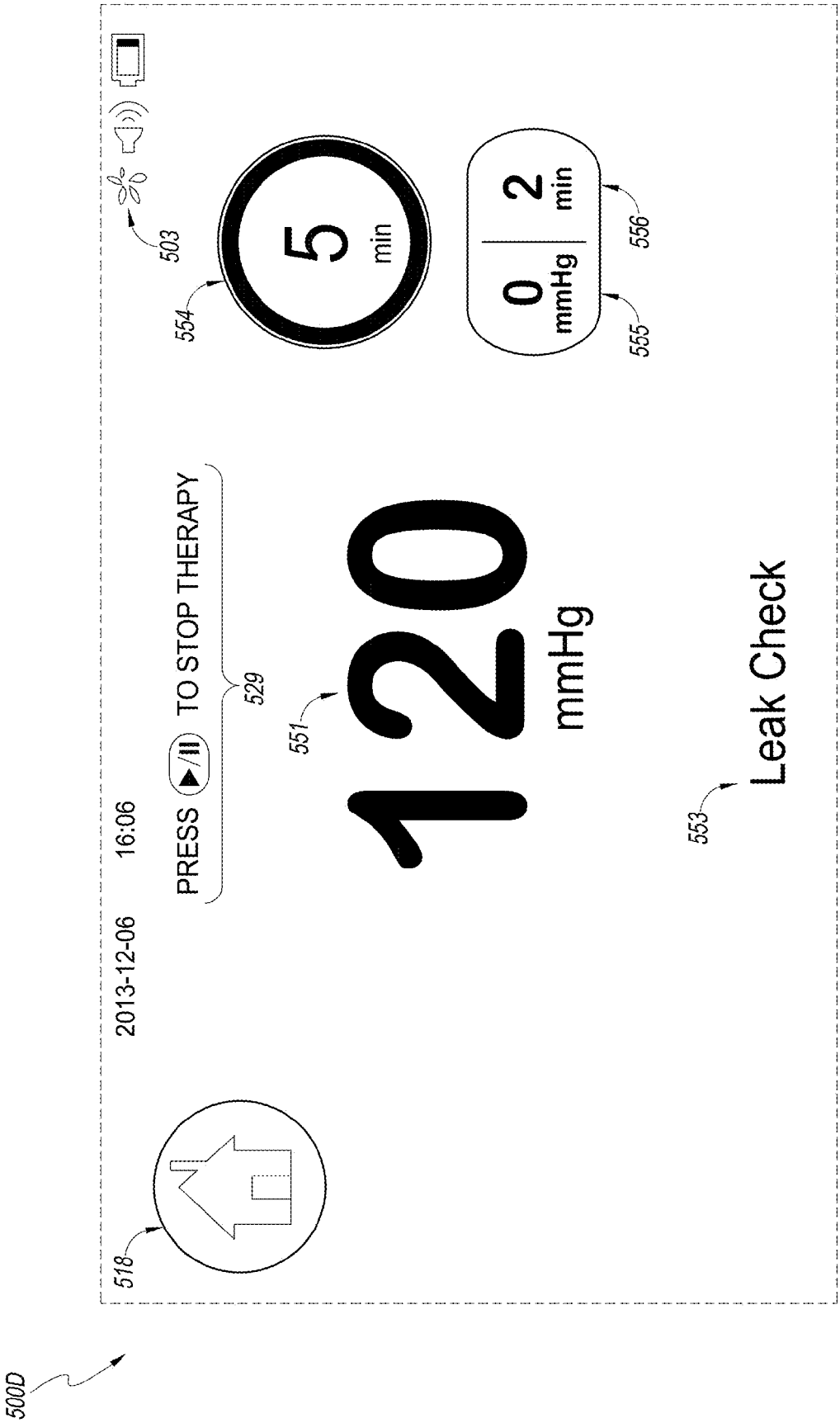
500D
518
2013-12-06
16:06
PRESS ▶/II TO STOP THERAPY
529
551
120
mmHg
553
Leak Check
503
554
5
min
0
mmHg
2
min
555
556

FIG. 5D

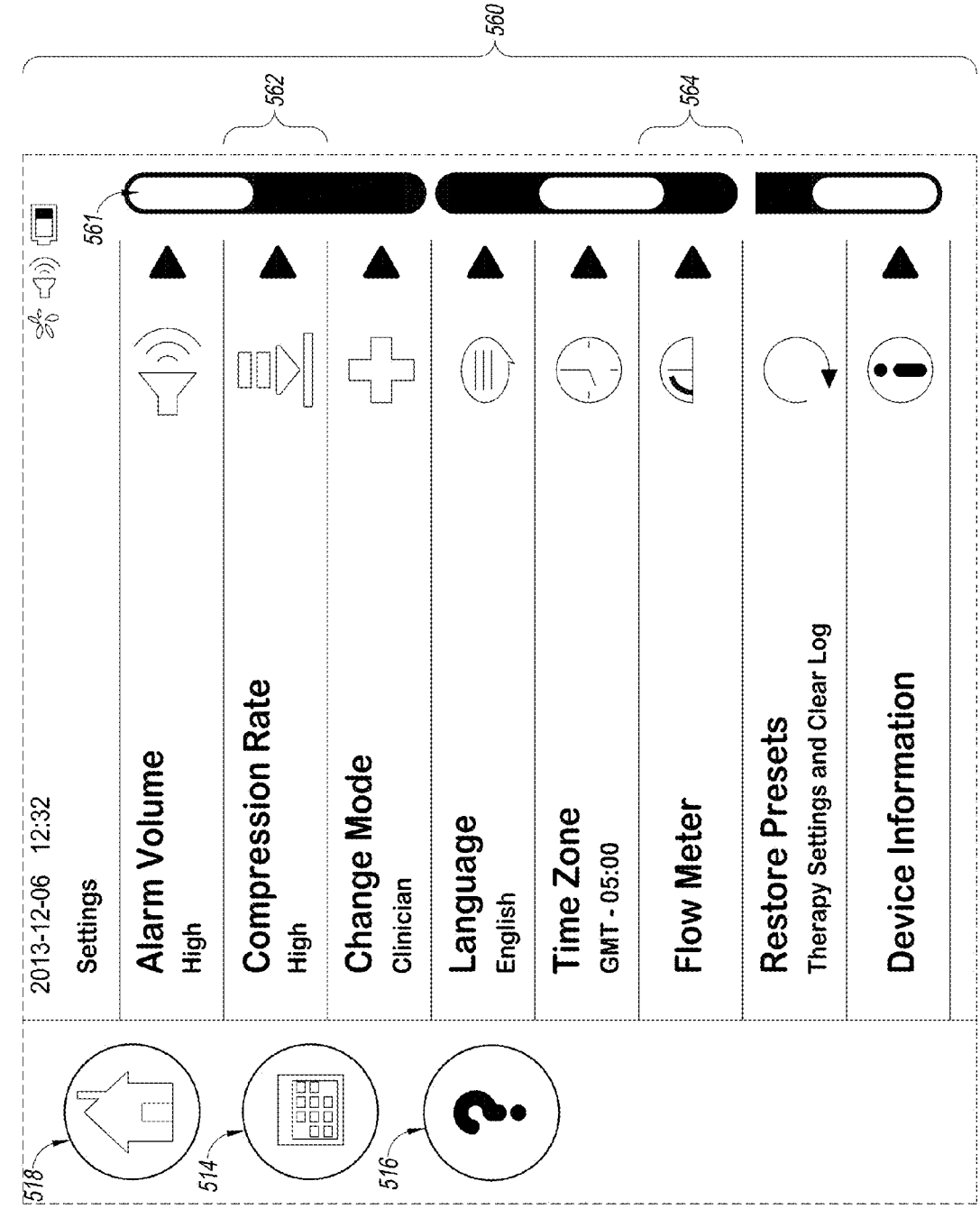
560
562
564
561
2013-12-06 12:32
Settings
Alarm Volume
High
Compression Rate
High
Change Mode
Clinician
Language
English
Time Zone
GMT - 05:00
Flow Meter
Restore Presets
Therapy Settings and Clear Log
Device Information
518
514
516

500E

FIG. 5E

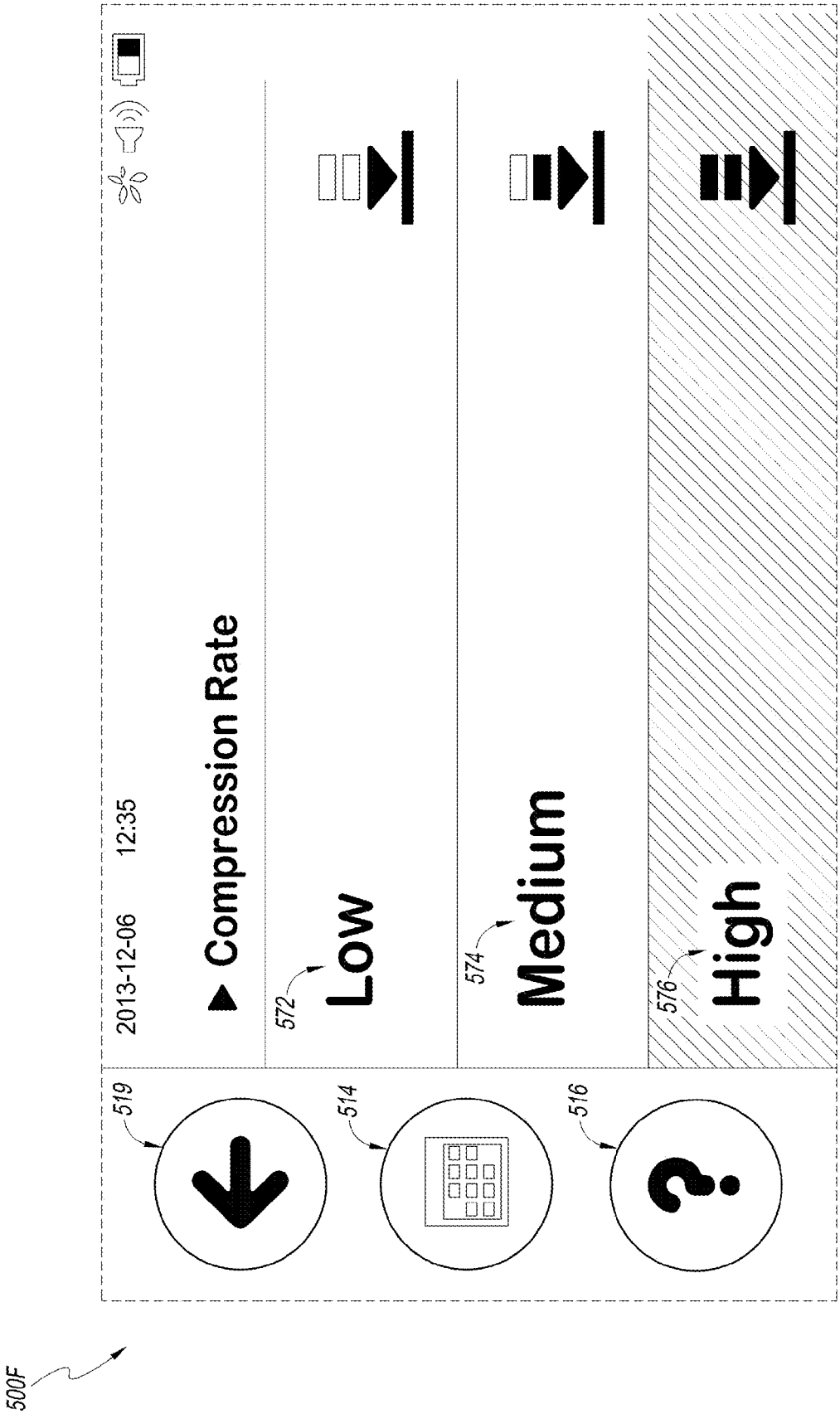
2013-12-06
12:35
Compression Rate
Low
Medium
High
572
574
576
519
514
516
500F

FIG. 5F

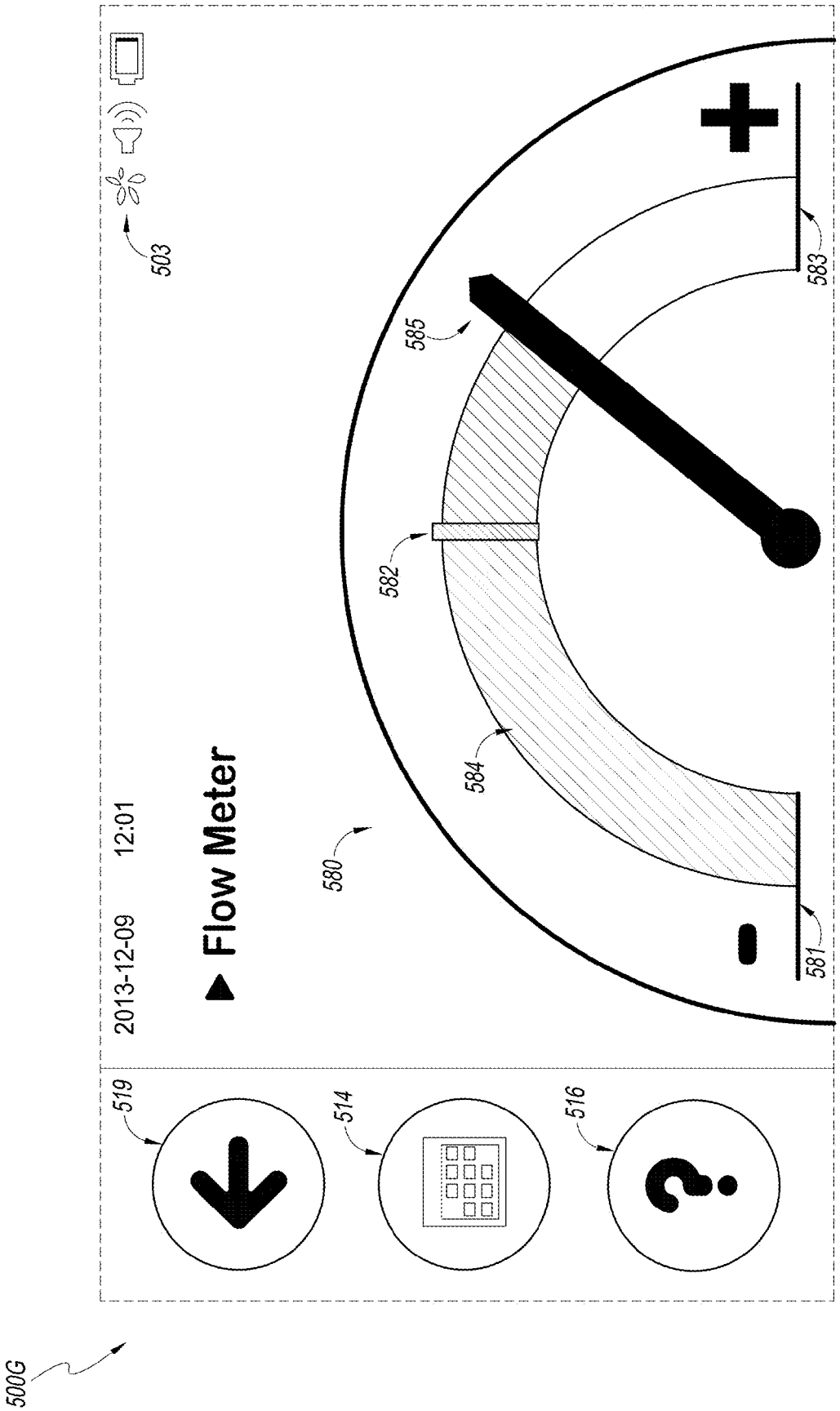
503
2013-12-09
12:01
Flow Meter
580
581
582
583
584
585
519
514
516
500G

FIG. 5G

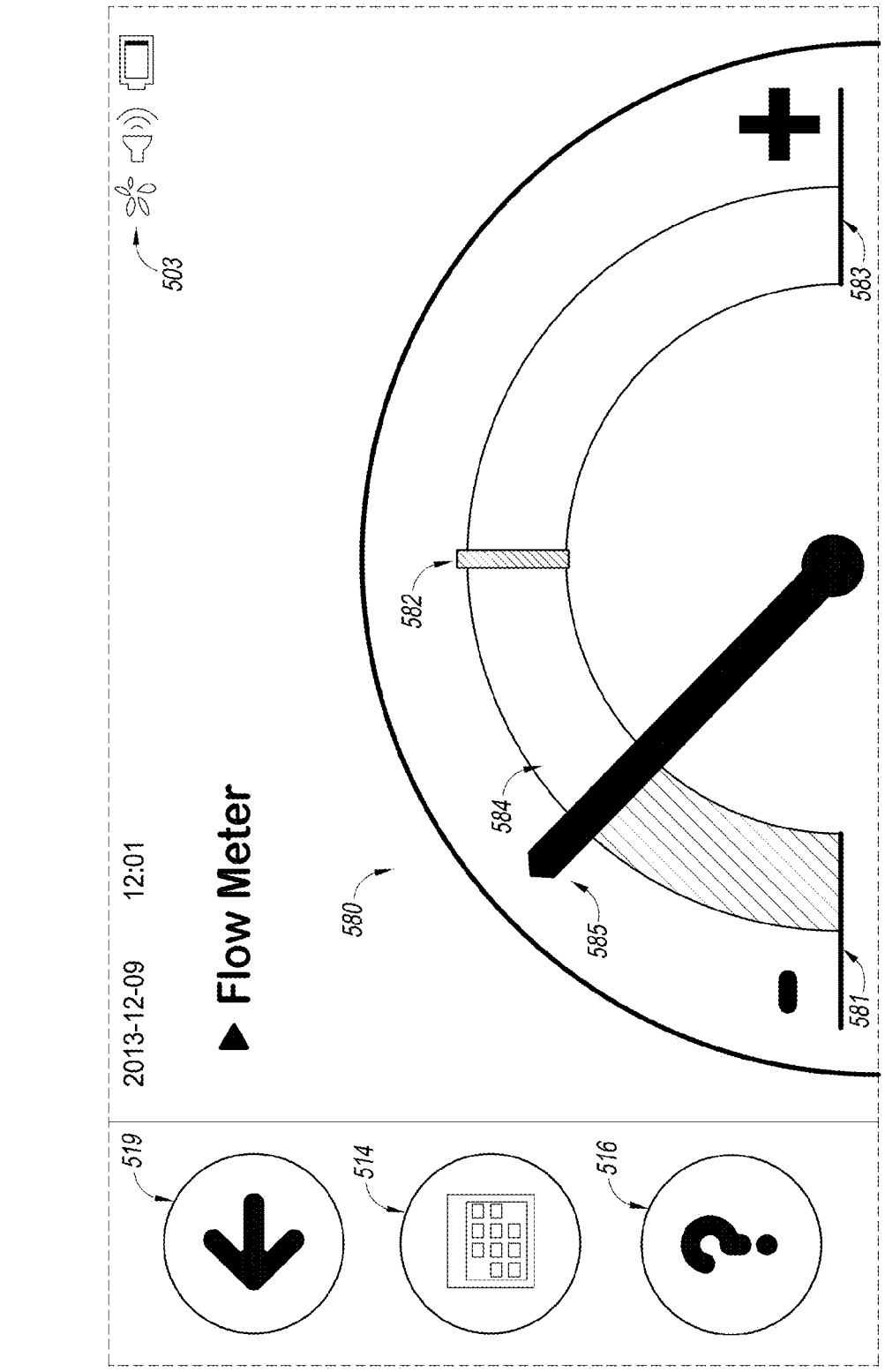
2013-12-09
12:01
Flow Meter
503
519
514
516
580
581
582
583
584
585
500H

FIG. 5H

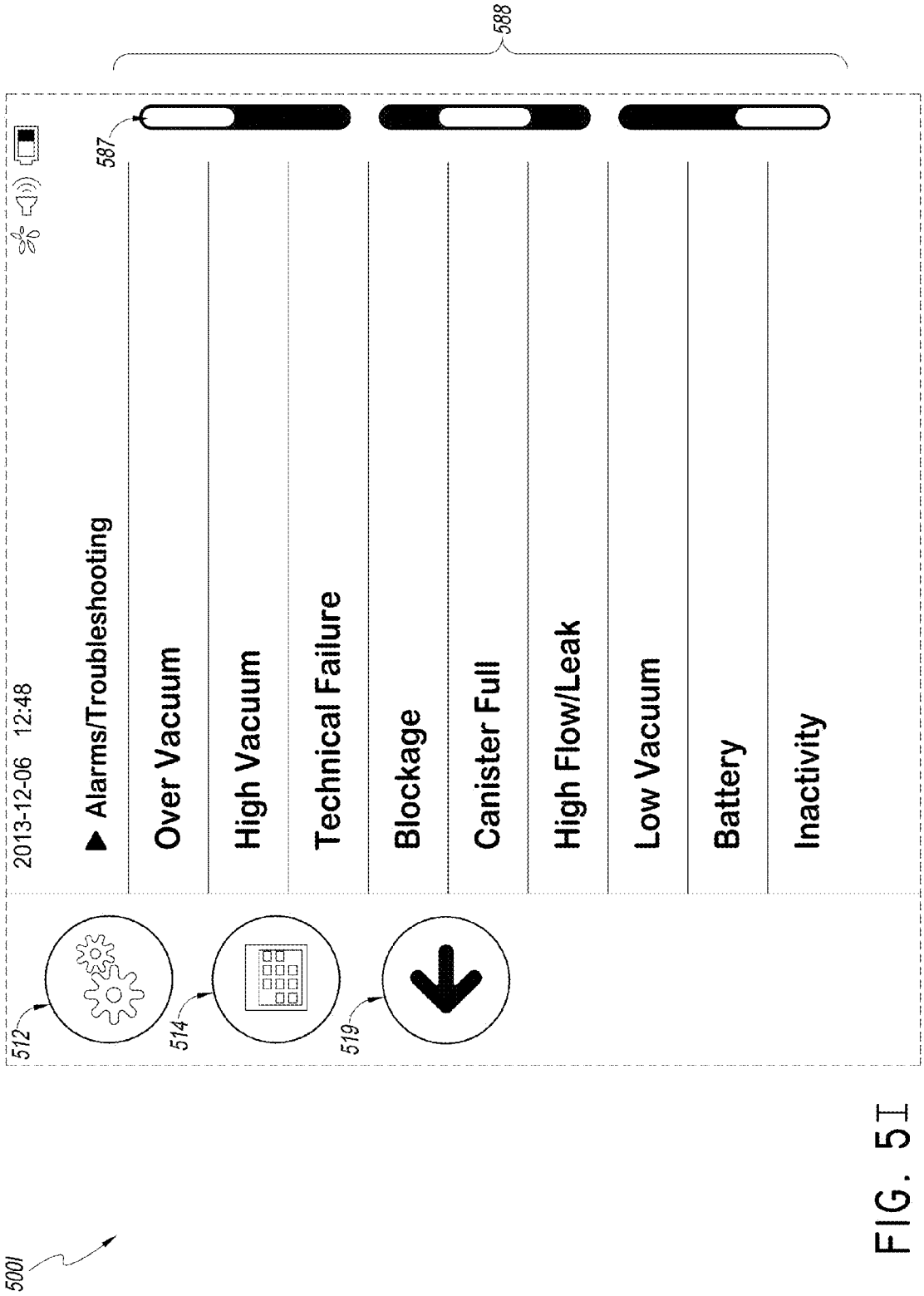
500I
2013-12-06 12:48
Alarms/Troubleshooting
Over Vacuum
High Vacuum
Technical Failure
Blockage
Canister Full
High Flow/Leak
Low Vacuum
Battery
Inactivity
512
514
519
587
588

FIG. 5I

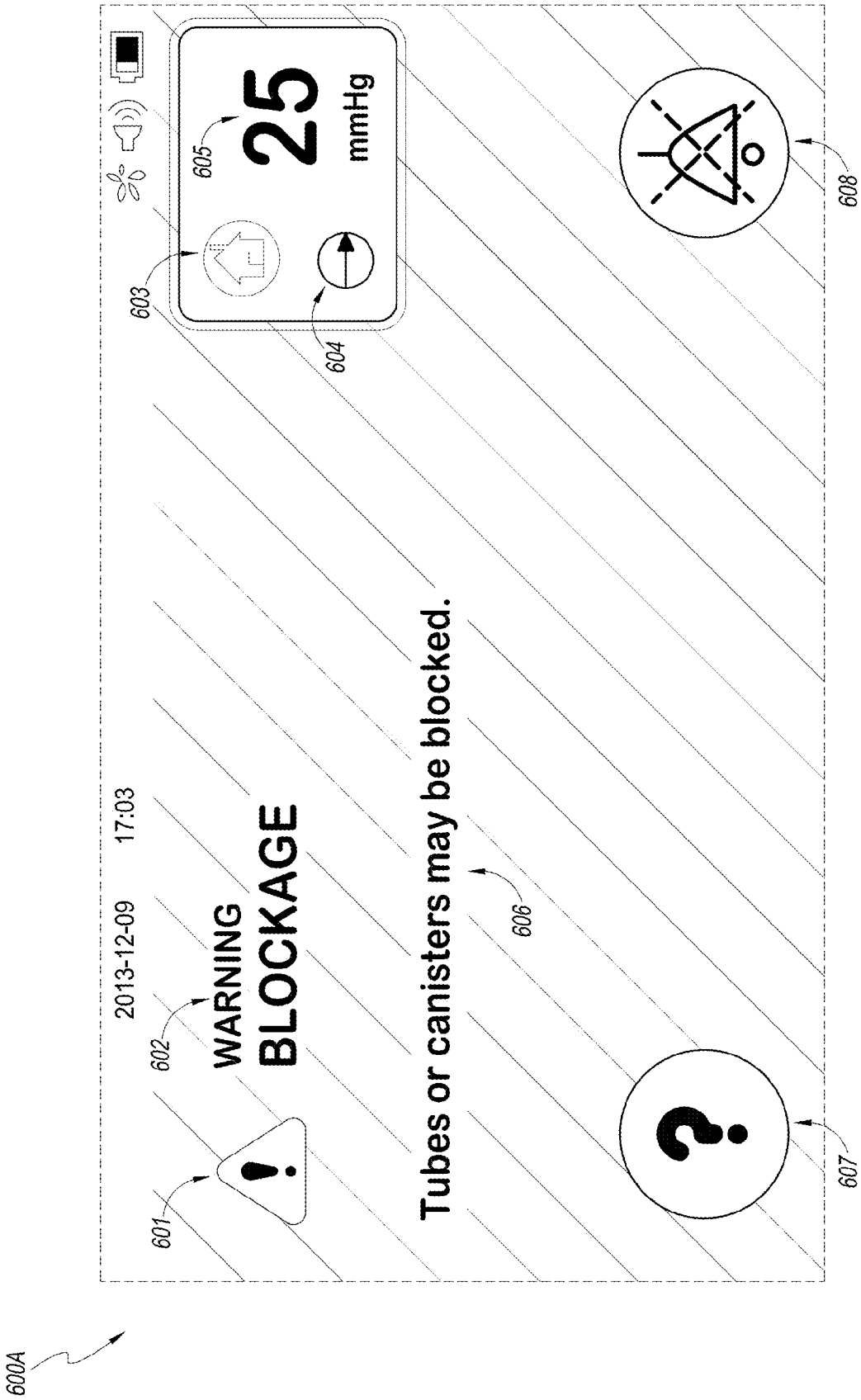
2013-12-09
17:03
WARNING
BLOCKAGE
Tubes or canisters may be blocked.
25
mmHg
601
602
603
604
605
606
607
608
600A

FIG. 6A

2013-12-09
17:37
WARNING
OVER VACUUM
Therapy Stopped. Power Off / Power On to clear..

600B

FIG. 6B

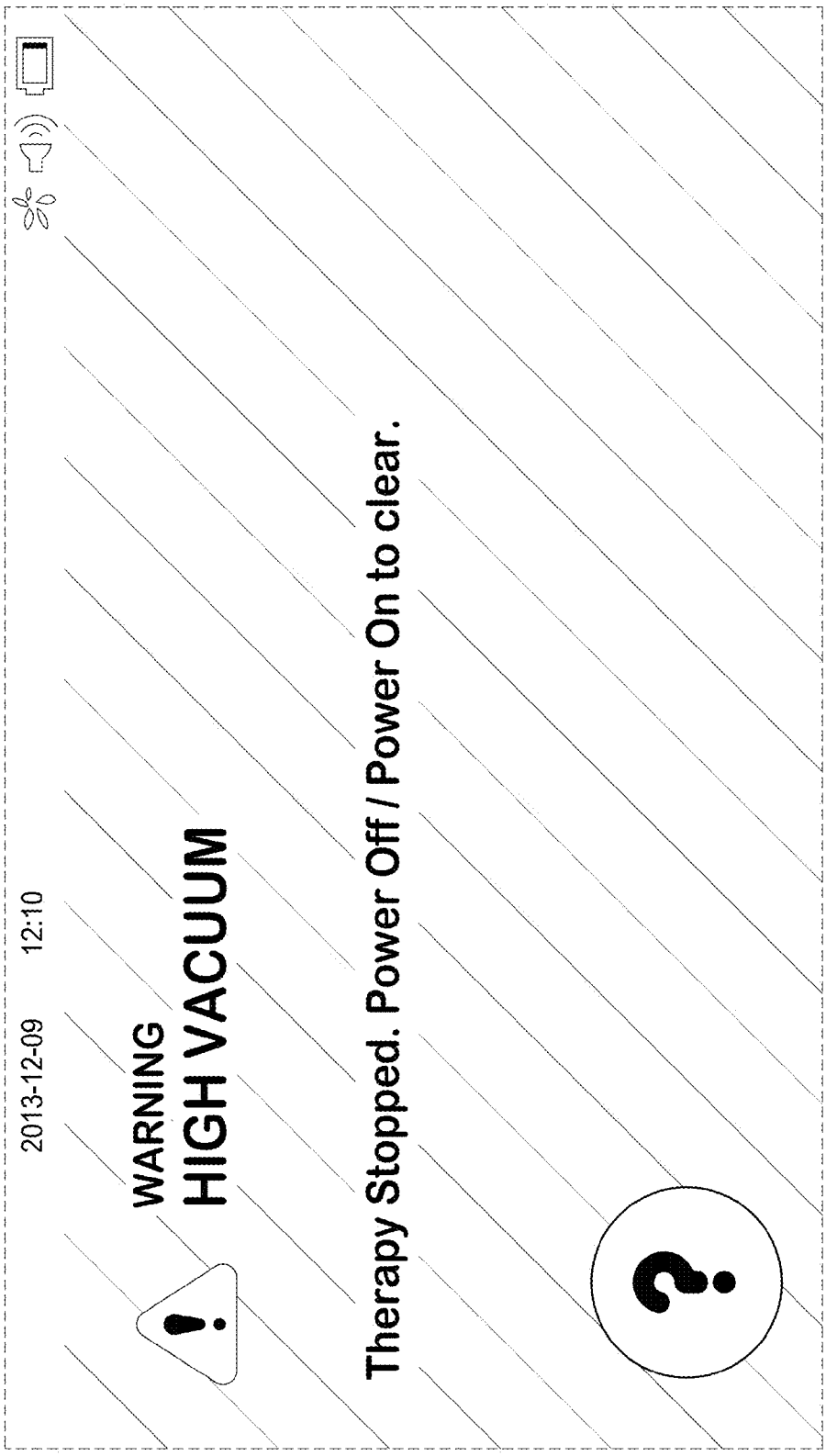
2013-12-09
12:10
WARNING
HIGH VACUUM
Therapy Stopped. Power Off / Power On to clear.

600C

FIG. 6C

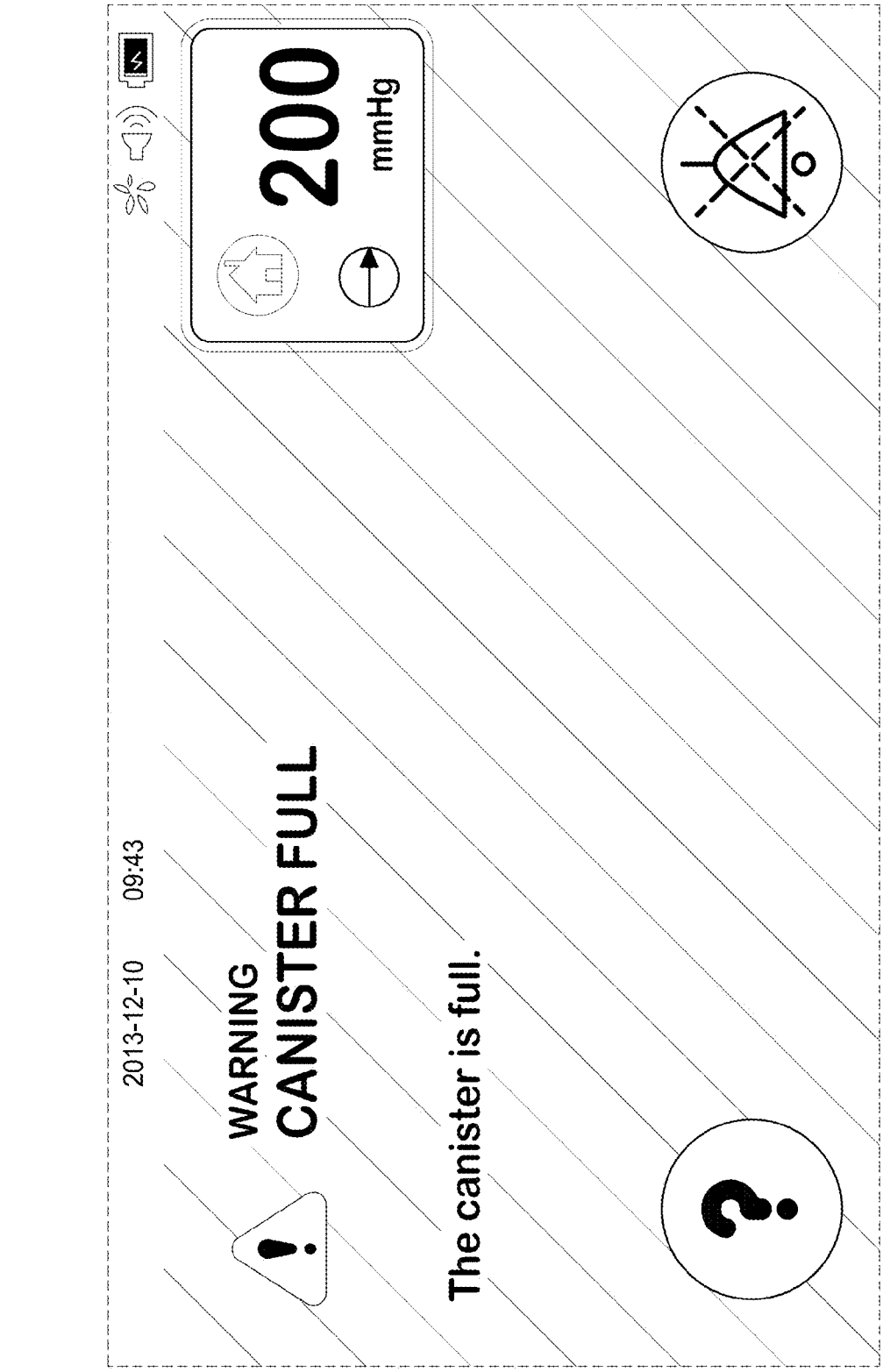
2013-12-10
09:43
200
mmHg
WARNING
CANISTER FULL
The canister is full.

600D

FIG. 6D

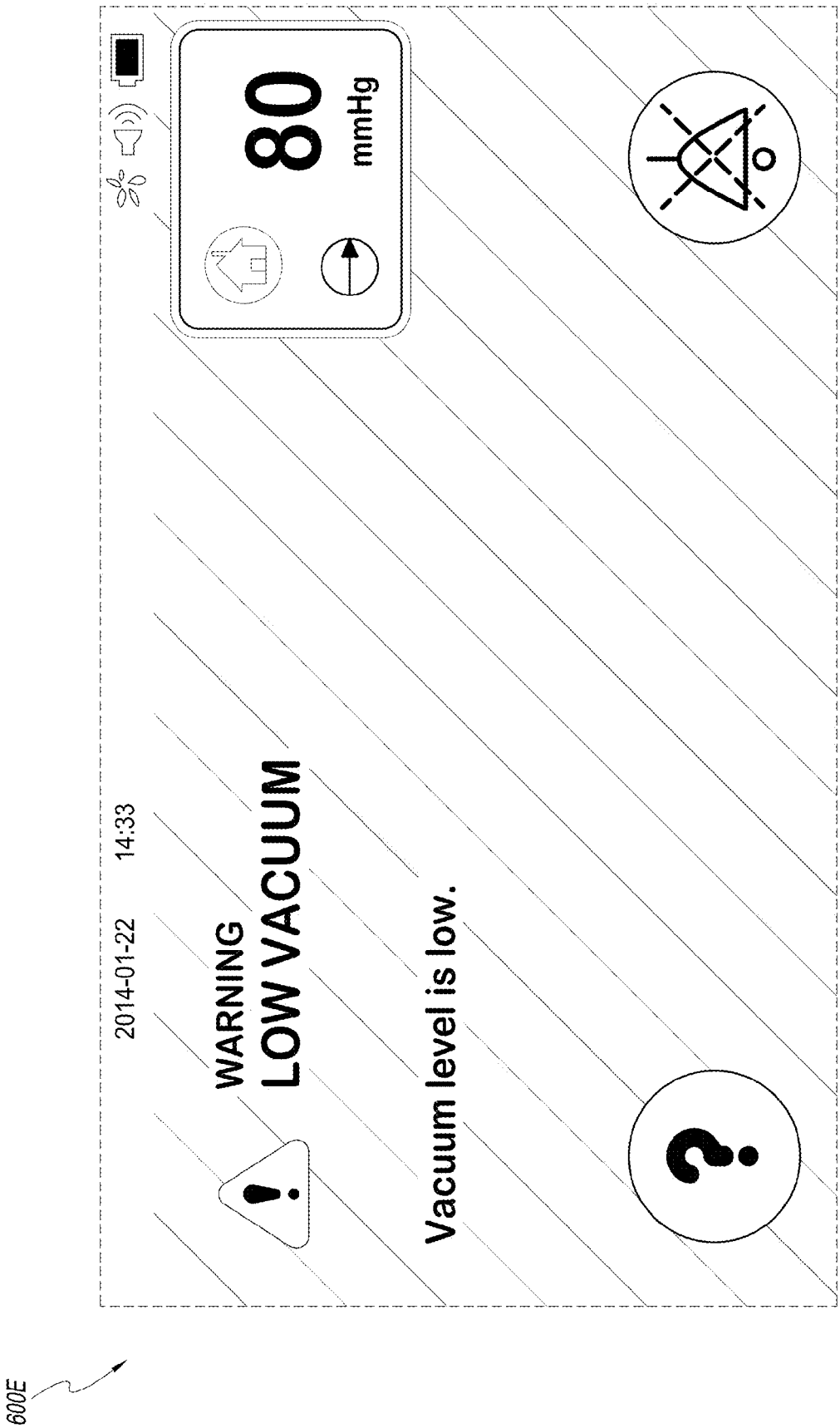
2014-01-22
14:33
80
mmHg
WARNING
LOW VACUUM
Vacuum level is low.
600E

FIG. 6E

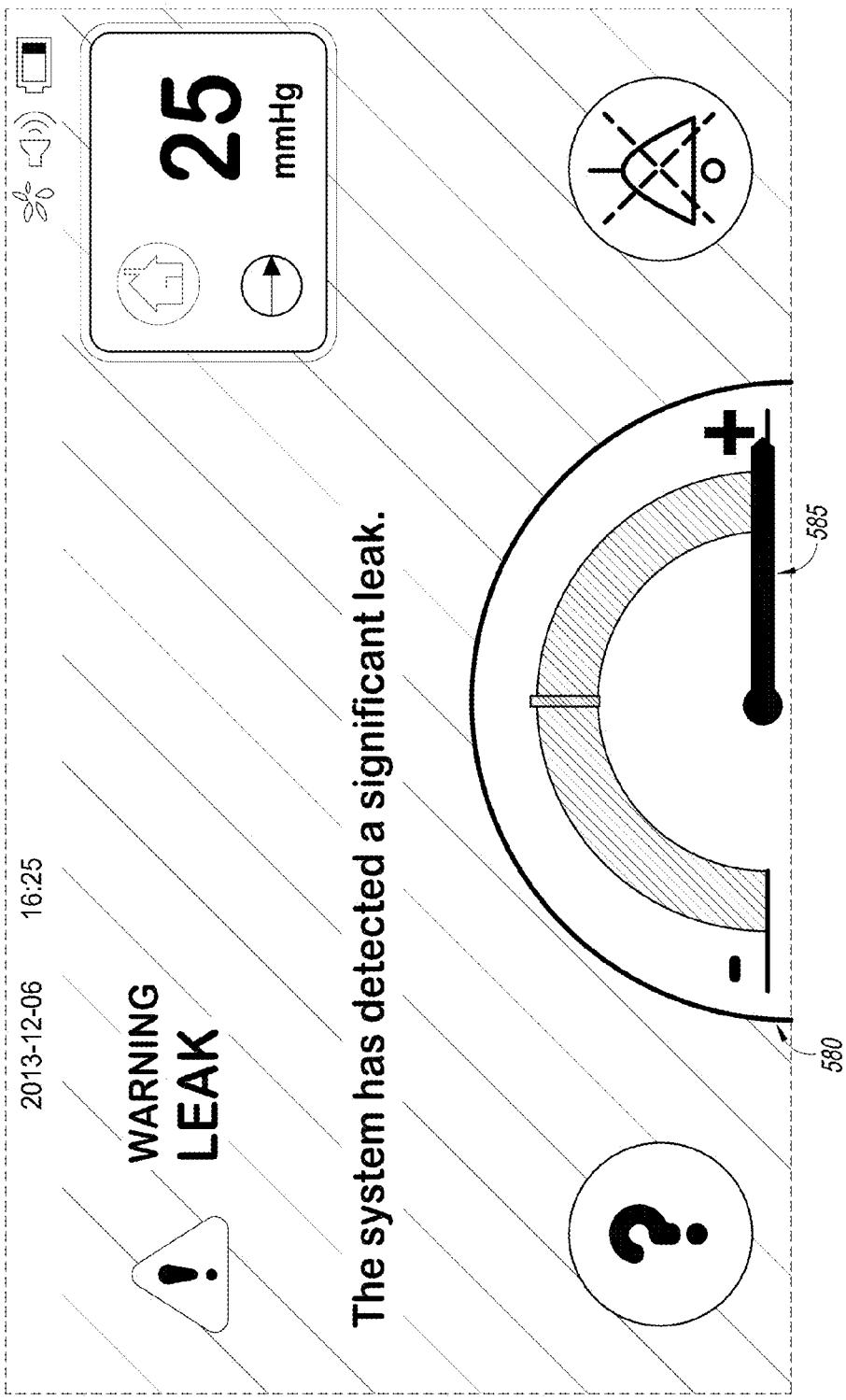
2013-12-06
16:25
WARNING
LEAK
The system has detected a significant leak.
25
mmHg
580
585

600F

FIG. 6F

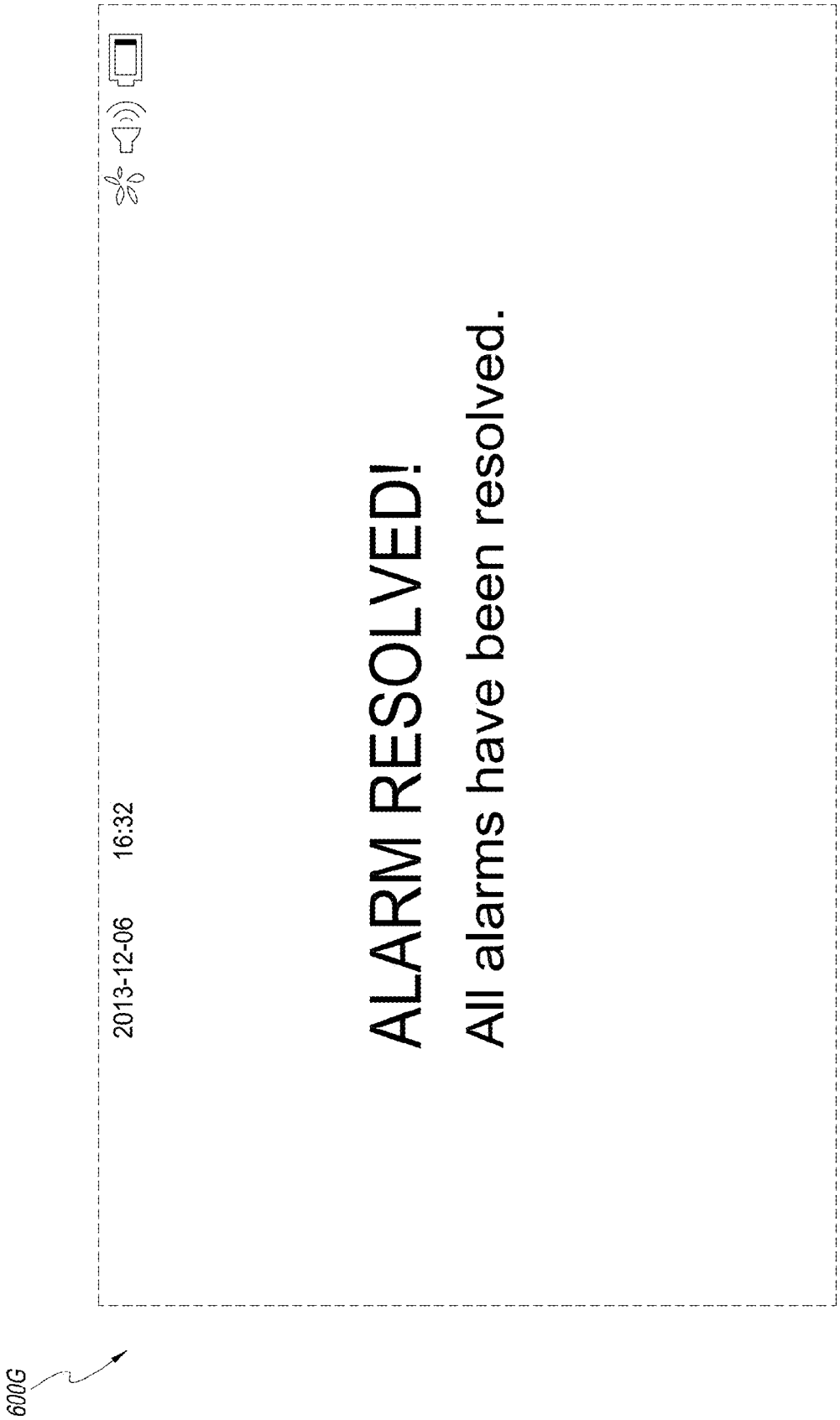
2013-12-06
16:32
ALARM RESOLVED!
All alarms have been resolved.
600G

FIG. 6G

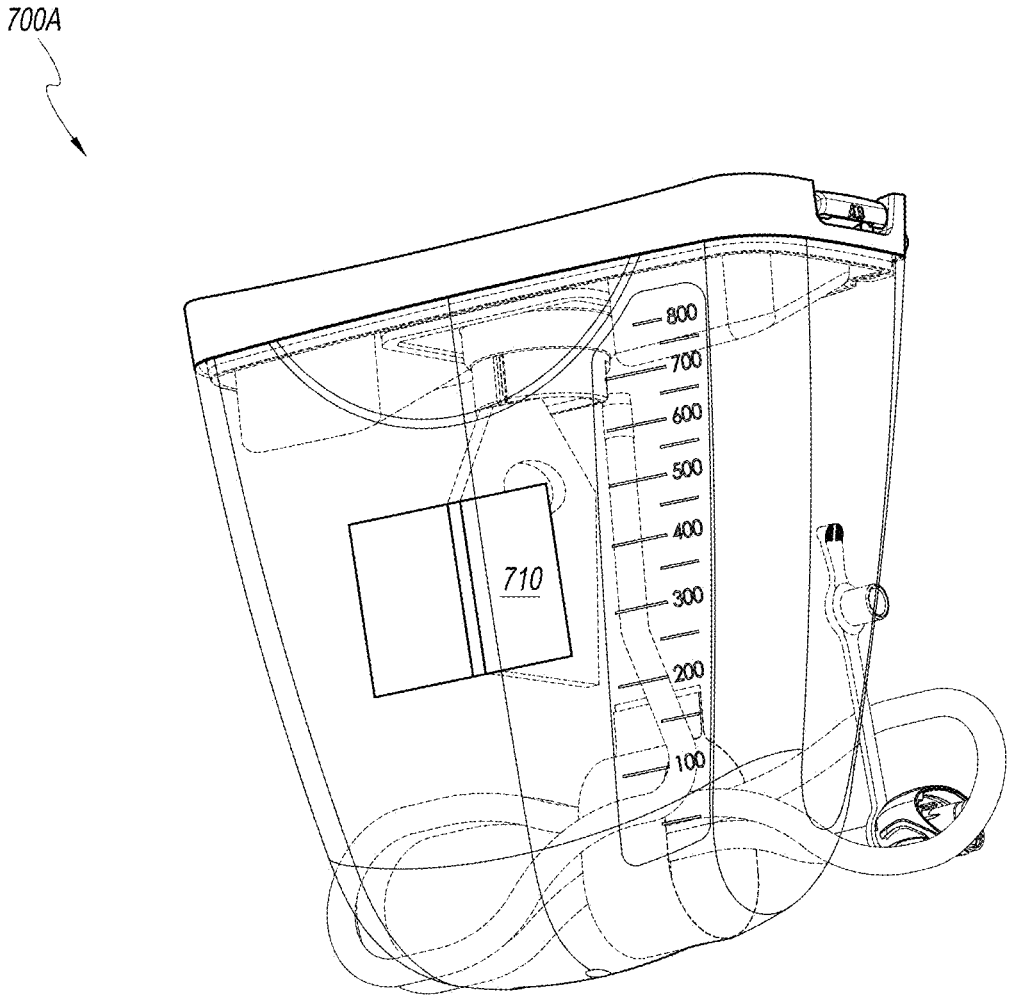

FIG. 7A

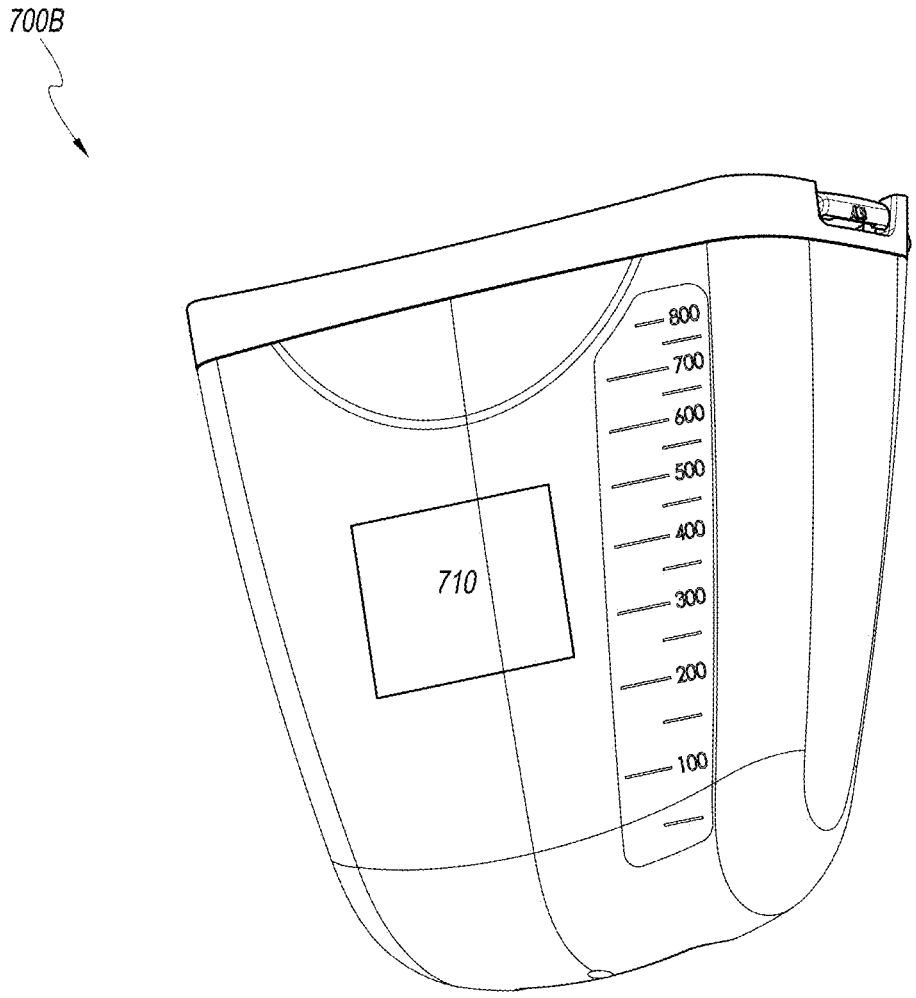

FIG. 7B

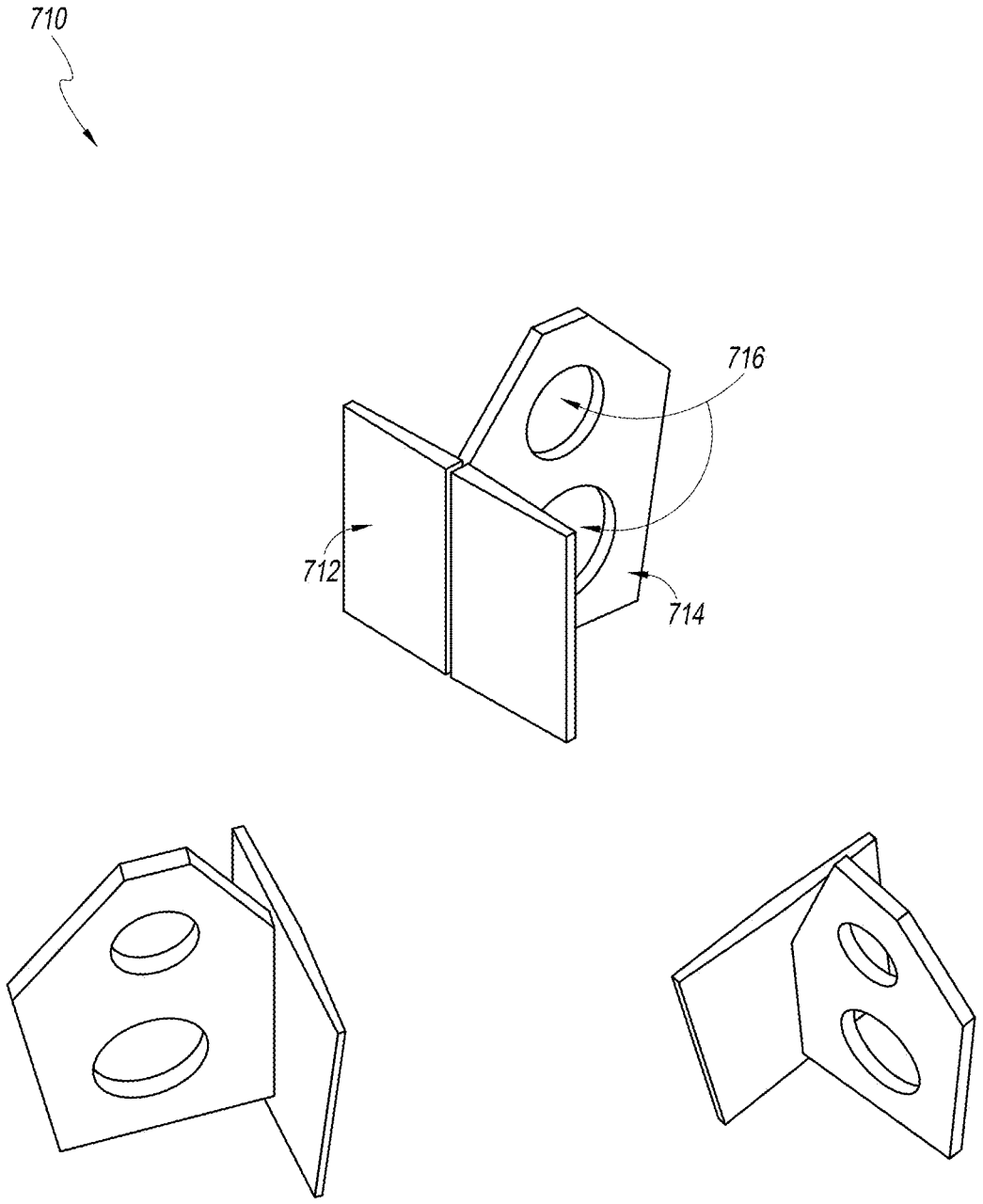

FIG. 7C

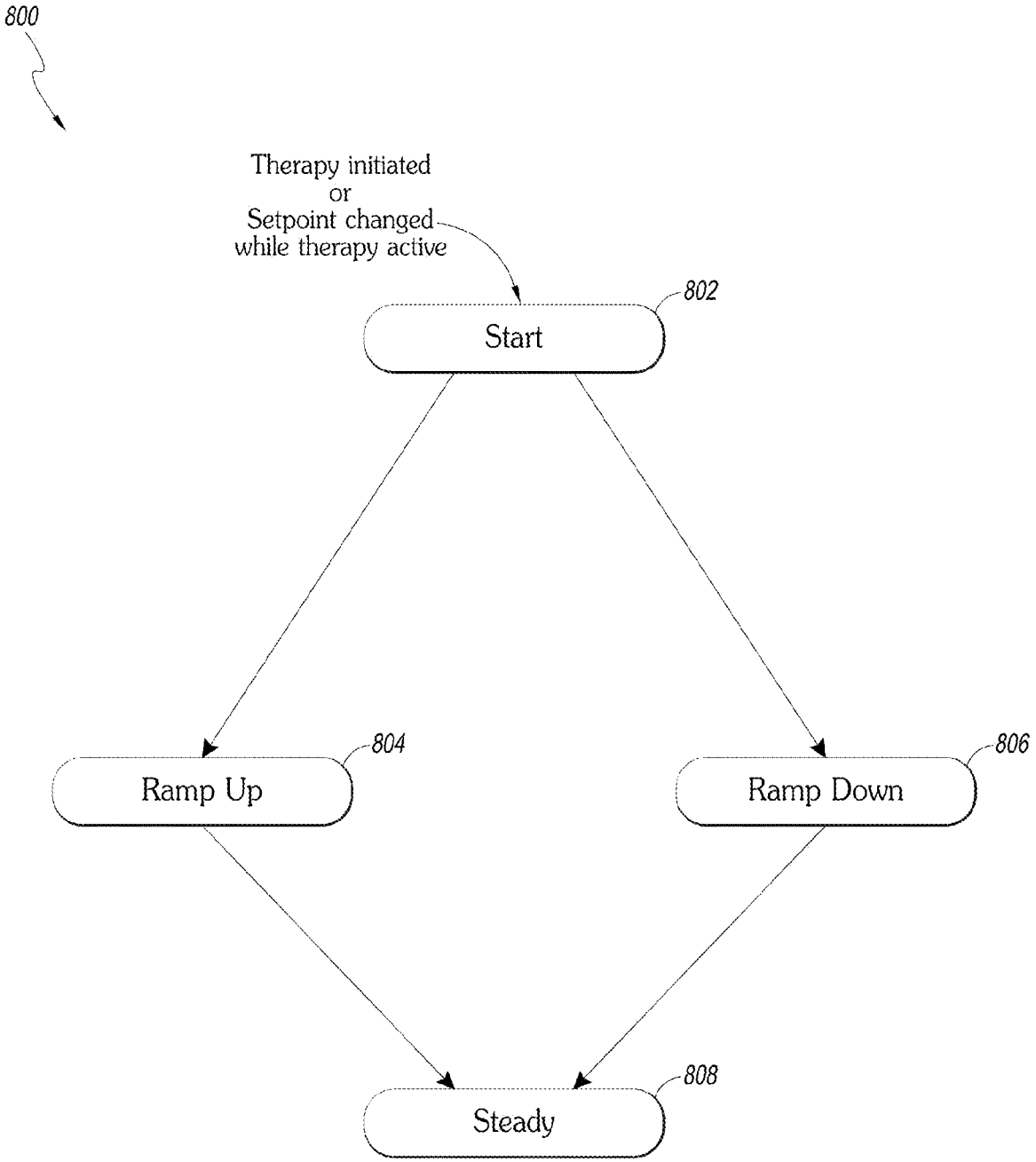
800
Therapy initiated
or
Setpoint changed
while therapy active
802
Start
804
Ramp Up
806
Ramp Down
808
Steady

FIG. 8

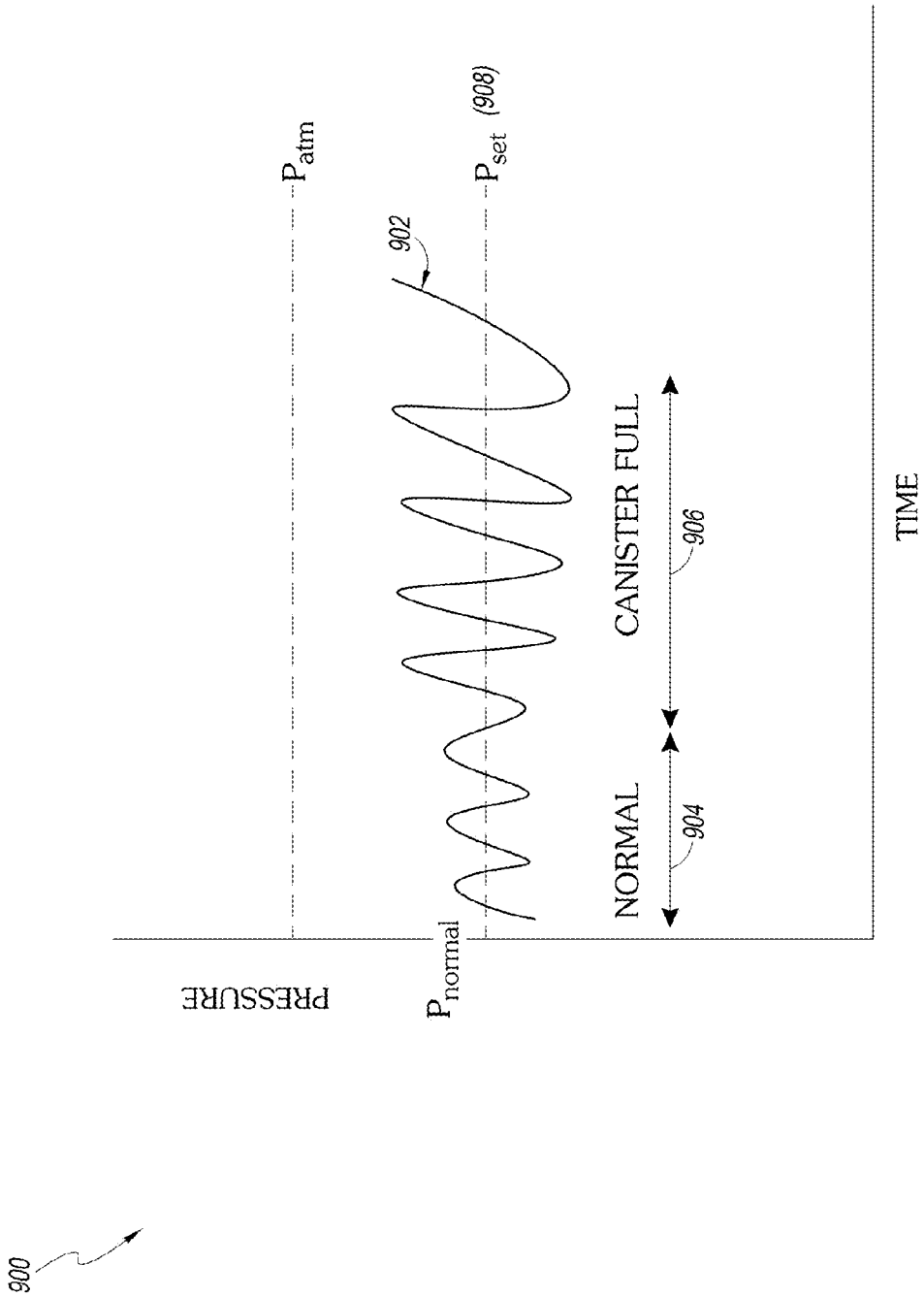
900
PRESSURE
P_{normal}
P_{atm}
902
P_{set} (908)
NORMAL
904
CANISTER FULL
906
TIME

FIG. 9

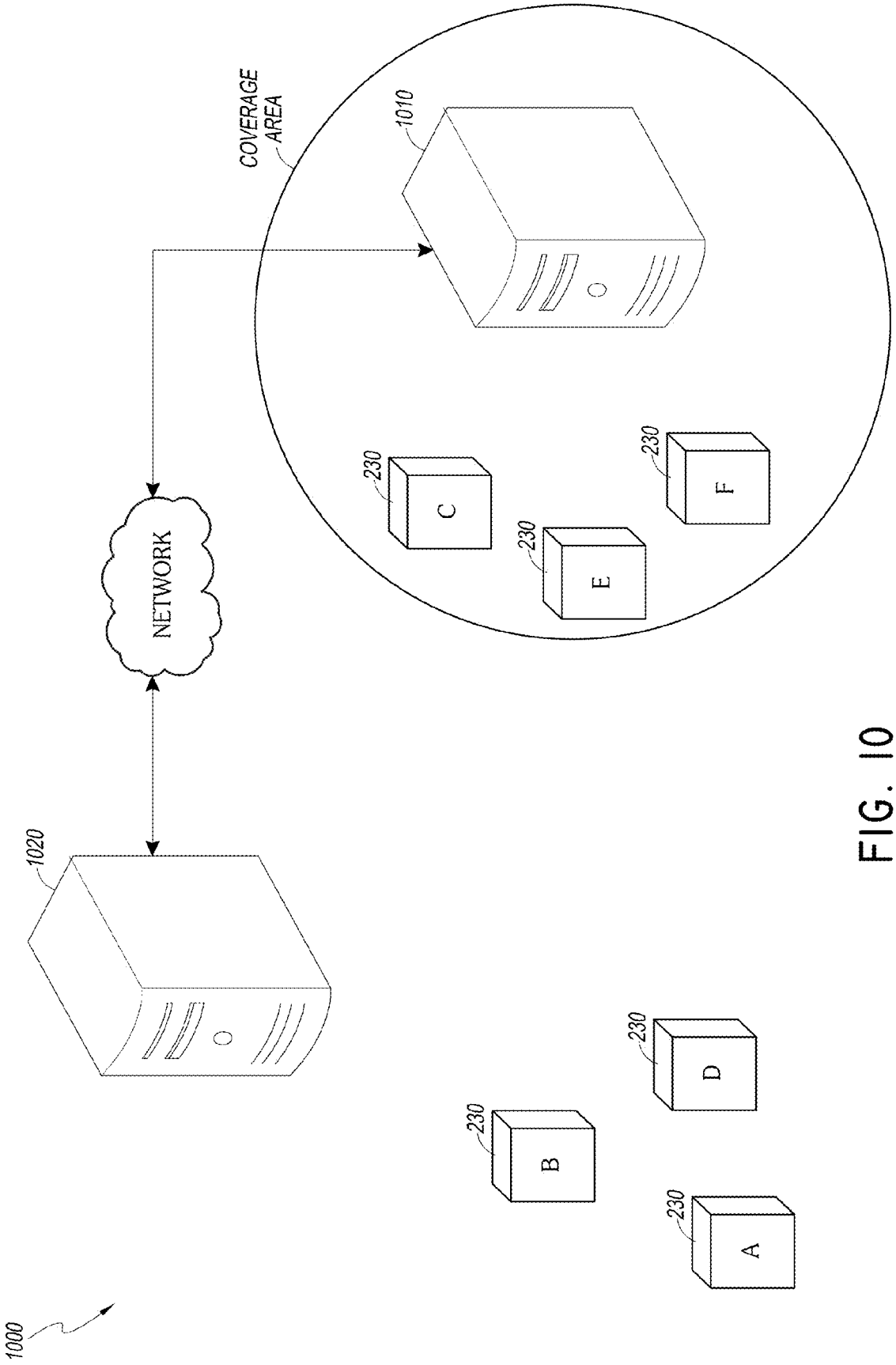
1000
1020
NETWORK
COVERAGE AREA
1010
230
C
230
E
230
F
230
B
230
D
230
A

FIG. 10

SYSTEMS AND METHODS FOR APPLYING REDUCED PRESSURE THERAPY

CROSS-REFERENCE TO RELATED APPLICATIONS

[0001] This application claims the benefit of U.S. Provisional Application No. 62/031,704, filed Jul. 31, 2014 the disclosure of which is hereby incorporated by reference in its entirety.

BACKGROUND

[0002] Field

[0003] Embodiments of the present disclosure relate to methods and apparatuses for dressing and treating a wound with reduced pressure therapy or topical negative pressure (TNP) therapy. In particular, but without limitation, embodiments disclosed herein relate to negative pressure therapy devices, methods for controlling the operation of TNP systems, and methods of using TNP systems.

[0004] Description of the Related Art

[0005] Many different types of wound dressings are known for aiding in the healing process of a human or animal. These different types of wound dressings include many different types of materials and layers, for example, gauze, pads, foam pads or multi-layer wound dressings. Topical negative pressure (TNP) therapy, sometimes referred to as vacuum assisted closure, negative pressure wound therapy, or reduced pressure wound therapy, is widely recognized as a beneficial mechanism for improving the healing rate of a wound. Such therapy is applicable to a broad range of wounds such as incisional wounds, open wounds and abdominal wounds or the like.

[0006] TNP therapy assists in the closure and healing of wounds by reducing tissue oedema, encouraging blood flow, stimulating the formation of granulation tissue, removing excess exudates and may reduce bacterial load and, thus, infection to the wound. Furthermore, TNP therapy permits less outside disturbance of the wound and promotes more rapid healing.

SUMMARY

[0007] In some embodiments, and apparatus for applying negative pressure therapy to a wound includes a housing having a source of negative pressure configured to be in fluidic communication with a wound dressing, the source of negative pressure configured to aspirate fluid from the wound. The apparatus also includes a pressure sensor configured to measure pressure in a fluid flow path configured to fluidically connect the wound dressing and the source of negative pressure and a controller configured to operate the source of negative pressure. The controller is configured to receive measurement of pressure in the fluid flow path from the pressure sensor, determine a rate of flow in the fluid flow path, upon initiation of negative pressure wound therapy, detect presence of one or more leaks in the fluid flow path based at least in part on the pressure in the fluid flow path and the rate of flow in the fluid flow path, and provide indication of presence of one or more leaks.

[0008] In certain embodiments, the apparatus of any of the preceding paragraph includes a housing that has an electronic display, and the controller is further configured to provide on the display a graphical representation of the rate of flow in the fluid flow path in response to detecting presence of one or more leaks. The graphical representation of the rate of flow in the fluid flow path can include a gauge.

[0009] In various embodiments, the apparatus of any of the preceding paragraphs includes a source of negative pressure that is a vacuum pump having a motor, and the controller is configured to determine the rate of flow in the fluid flow path by measuring a speed of the motor. The apparatus can include a tachometer configured to measure the speed of the motor. The controller can be further configured to measure a first plurality of motor speeds during a first period of time and to average the first plurality of motor speeds, the average being indicative of the rate of flow. The controller can be further configured to measure a second plurality of motor speeds over a second period of time different from the first period of time and to average the second plurality of motor speeds, the average being indicative of the rate of flow. The controller can be further configured to utilize the averages of the first and second plurality of motor speeds to determine at least one of presence of one or more leaks in the fluid flow path, presence of one or more blockages in the fluid flow path, low negative pressure in the fluid flow path, and high negative pressure in the fluid flow path.

[0010] In sonic embodiments, the apparatus of any of the preceding claims includes a canister configured to collect fluid aspirated from the wound. The controller can be further configured to detect a canister full condition by, in response to determining that the rate of flow satisfies a flow rate threshold indicative of a leak and that canister pressure does not satisfy a pressure threshold indicative of low negative pressure, detecting a change in a characteristic of pressure in the fluid flow path and detecting that the canister is full based at least in part of the detected change. The change in the characteristic of pressure can include a plurality of changes in the amplitude of pressure and the controller is configured to detect that the canister is full by comparing at least some of the plurality of changes in the amplitude of pressure to a threshold.

[0011] In various embodiments, a method of operating a negative pressure wound pressure therapy apparatus includes measuring pressure in a fluid flow path configured to fluidically connect a source of negative pressure and a wound dressing and measuring a rate of flow in the fluid flow path. The method also includes upon initiation of negative pressure wound therapy, detecting presence of one or more leaks in the fluid flow path based at least in part on the pressure in the fluid flow path and the rate of flow in the fluid flow path and providing indication of presence of one or more leaks. The method can be performed by a controller of the negative wound pressure therapy apparatus.

[0012] In certain embodiments, the method of any of the preceding paragraph includes providing, on a display, a graphical representation of the rate of flow in the fluid flow path in response to detecting presence of one or more leaks. The graphical representation of the rate of flow in the fluid flow can include a gauge. Measuring the rate of fluid in the fluid flow path can include measuring a speed of a motor operating a negative pressure source.

[0013] In some embodiments, the method of any of the preceding paragraphs further includes measuring a first plurality of motor speeds during a first period of time and averaging the first plurality of motor speeds, the average being indicative of the rate of flow. The method can further include measuring a second plurality of motor speeds over

a second period of time different from the first period of time and averaging the second plurality of motor speeds, the average being indicative of the rate of flow. The method can further include utilizing the averages of the first and second plurality of motor speeds to determine at least one of presence of one or more leaks in the fluid flow path, presence of one or more blockages in the fluid flow path, low negative pressure in the fluid flow path, and high negative pressure in the fluid flow path.

[0014] In various embodiments, the method of any of the preceding paragraphs includes in response to determining that the rate of flow satisfies a flow rate threshold indicative of a leak and canister pressure does not satisfy a pressure threshold indicative of low negative pressure, detecting whether a canister is full by detecting a change in a characteristic of pressure in the fluid flow path and detecting that the canister is full based at least in part of the detected change. The change in the characteristic of pressure can include a plurality of changes in the amplitude of pressure and detecting that the canister is full comprises comparing at least some of the plurality of changes in the amplitude of pressure to a threshold.

[0015] In certain embodiments, a canister for use in negative pressure wound therapy includes a first wall and a second wall opposite the first wall, the first and second walls defining an interior volume configured to collect wound exudate aspirated from a wound. The canister also includes a reinforcement element attached to the first wall and extending toward the second wall, the reinforcement element dimensioned to prevent collapse of at least one of the first and second walls when negative pressure is applied to the canister.

[0016] In various embodiments, the canister of the preceding paragraph includes a protruding element that has a hexagonal shape. The protruding element can have at least one hole. At least a part of the protruding element can be configured to be in contact with the second wall when negative pressure is not applied the canister. When negative pressure is applied to the canister, at least a part of the protruding element can be configured to be in contact with the second wall. The first and second walls can include plastic material and the interior volume can be configured to hold about 800 mL of fluid. A source of negative pressure can be configured to be in fluid communication with the canister.

[0017] In sonic embodiments, an apparatus for applying negative pressure therapy includes a source of negative pressure configured to be in fluidic communication with a plurality of wound dressings, the source of negative pressure further configured to aspirate fluid from a plurality of wounds. The apparatus also includes a controller configured to operate the source of negative pressure to aspirate fluid from one or more wounds from the plurality of wounds. The controller further is configured to receive a request to apply negative pressure wound therapy to a single wound or at least two wounds from the plurality of wounds, based on the request, activate the source of negative pressure to aspirate fluid from the wound or at least two wounds, based on the request, determine a rate of flow in the fluid flow path configured to fludically connect the negative pressure source and the wound or the negative pressure source and the at least two wounds, and detect a blockage in the fluid flow path by comparing the rate of flow to a first blockage threshold corresponding to aspirating fluid from the wound or a second blockage threshold corresponding to aspirating fluid from the at least two wounds.

[0018] In certain embodiments, the apparatus of the preceding paragraph includes a controller further configured to determine the second threshold by modifying the first threshold. Modifying the first threshold can include increasing the first threshold.

[0019] In various embodiments, he apparatus of the preceding two paragraphs further includes a user interface, and wherein the request is received from the user interface. The user interface can include a touchscreen display.

[0020] In some embodiments, the apparatus of any of the preceding paragraphs further includes a transmitter configured to communicate with a remote computing device when the apparatus is within a coverage area of the remote computing device so as to enable the remote computing device to determine whether the apparatus is within the coverage area. The transmitter can be configured to repeatedly communicate with the remote computing device to cause the remote computing device to determine a first time when the apparatus is removed from the coverage area and a second time when the apparatus is returned to the coverage area, thereby causing the remote computing device to determine a duration of time that the apparatus is outside the coverage area based at leak on a comparison of the first time and the second time. The transmitter can be configured to transmit a signal using a substantially constant signal strength to enable the remote computing device to determine a location of the apparatus relative to the coverage area based at least on a signal strength of a signal received by the remote computing device from the transmitter. The transmitter can be configured to transmit a signal that does not enable the remote computing device to detect a presence of the apparatus in the coverage area when the apparatus is positioned outside the coverage area.

BRIEF DESCRIPTION OF THE DRAWINGS

[0021] Embodiments of the present invention will now be described hereinafter, by way of example only, with reference to the accompanying drawings in which:

[0022] FIG. **1** illustrates a reduced pressure wound therapy system according to some embodiments.

[0023] FIGS. **2**A-**2**C illustrate a pump assembly and canister according to some embodiments.

[0024] FIG. **3** illustrates an electrical component schematic of a pump assembly according to some embodiments.

[0025] FIG. **4** illustrates a firmware and/or software diagram according to some embodiments.

[0026] FIGS. **5**A-**5**I illustrate graphical user interface screens according to some embodiments.

[0027] FIGS. **6**A-**6**G illustrate alarms screens according to some embodiments.

[0028] FIGS. **7**A-**7**C illustrate a canister stiffener according to some embodiments.

[0029] FIG. **8** illustrates a process of providing negative pressure wound therapy according to sonic embodiments.

[0030] FIG. **9** illustrates pressure pulses according to some embodiments.

[0031] FIG. **10** illustrates a system for location monitoring according to some embodiments.

DETAILED DESCRIPTION OF SOME EMBODIMENTS

Overview

[0032] Embodiments disclosed herein relate to systems and methods of treating a wound with reduced pressure. As is used herein, reduced or negative pressure levels, such as −X mmHg, represent pressure levels relative to normal ambient atmospheric pressure, which can correspond to 760 mmHg for 1 atm, 29.93 inHg, 101.325 kPa, 14.696 psi, etc.). Accordingly, a negative pressure value of −X mmHg reflects absolute pressure that is X mmHg below 760 mmHg or, in other words, an absolute pressure of (760-X) mmHg. In addition, negative pressure that is "less" or "smaller" than X mmHg corresponds to pressure that is closer to atmospheric pressure (e.g., −40 mmHg is less than −60 mmHg). Negative pressure that is "more" or "greater" than −X mmHg corresponds to pressure that is further from atmospheric pressure (e.g., −80 mmHg is more than −60 mmHg). In some embodiments, local ambient atmospheric pressure is used as a reference point, and such local atmospheric pressure may not necessarily be, for example, 760 mmHg.

[0033] Embodiments of the present invention are generally applicable to use in topical negative pressure (TNP) or reduced pressure therapy systems. Briefly, negative pressure wound therapy assists in the closure and healing of many forms of "hard to heal" wounds by reducing tissue oedema, encouraging blood flow and granular tissue formation, and/or removing excess exudate and can reduce bacterial load (and thus infection risk). In addition, the therapy allows for less disturbance of a wound leading to more rapid healing. TNP therapy systems can also assist in the healing of surgically closed wounds by removing fluid. In some embodiments, TNP therapy helps to stabilize the tissue in the apposed position of closure. A further beneficial use of TNP therapy can be found in grafts and flaps where removal of excess fluid is important and close proximity of the graft to tissue is required in order to ensure tissue viability.

Negative Pressure System

[0034] FIG. **1** illustrates an embodiment of a negative or reduced pressure wound treatment (or TNP) system **100** comprising a wound filler **130** placed inside a wound cavity **110**, the wound cavity sealed by a wound cover **120**. The wound filler **130** in combination with the wound cover **120** can be referred to as wound dressing. A single or multi lumen tube or conduit **140** is connected the wound cover **120** with a pump assembly **150** configured to supply reduced pressure. The wound cover **120** can be in fluidic communication with the wound cavity **110**. In any of the system embodiments disclosed herein, as in the embodiment illustrated in FIG. **1**, the pump assembly can be a canisterless pump assembly (meaning that exudate is collected in the wound dressing or is transferred via tube **140** for collection to another location). However, any of the pump assembly embodiments disclosed herein can be configured to include or support a canister. Additionally, in any of the system embodiments disclosed herein, any of the pump assembly embodiments can be mounted to or supported by the dressing, or adjacent to the dressing. The wound filler **130** can be any suitable type, such as hydrophilic or hydrophobic foam, gauze, inflatable bag, and so on. The wound filler **130** can be conformable to the wound cavity **110** such that it substantially fills the cavity. The wound cover **120** can provide a substantially fluid impermeable seal over the wound cavity **110**. The wound cover **120** can have a top side and a bottom side, and the bottom side adhesively (or in any other suitable manner) seals with wound cavity **110**. The conduit **140** or lumen or any other conduit or lumen disclosed herein can be formed from polyurethane, PVC, nylon, polyethylene, silicone, or any other suitable material.

[0035] Some embodiments of the wound cover **120** can have a port (not shown) configured to receive an end of the conduit **140**. In other embodiments, the conduit **140** can otherwise pass through and/or under the wound cover **120** to supply reduced pressure to the wound cavity **110** so as to maintain a desired level of reduced pressure in the wound cavity. The conduit **140** can be any suitable article configured to provide at least a substantially sealed fluid flow pathway between the pump assembly **150** and the wound cover **120**, so as to supply the reduced pressure provided by the pump assembly **150** to wound cavity **110**.

[0036] The wound cover **120** and the wound filler **130** can be provided as a single article or an integrated single unit. In some embodiments, no wound filler is provided and the wound cover by itself may be considered the wound dressing. The wound dressing may then be connected, via the conduit **140**, to a source of negative pressure, such as the pump assembly **150**. The pump assembly **150** can be miniaturized and portable, although larger conventional pumps such can also be used.

[0037] The wound cover **120** can be located over a wound site to be treated. The wound cover **120** can form a substantially sealed cavity or enclosure over the wound site. In some embodiments, the wound cover **120** can be configured to have a film having a high water vapour permeability to enable the evaporation of surplus fluid, and can have a superabsorbing material contained therein to safely absorb wound exudate. It will be appreciated that throughout this specification reference is made to a wound. In this sense it is to be understood that the term wound is to be broadly construed and encompasses open and closed wounds in which skin is torn, cut or punctured or where trauma causes a contusion, or any other surficial or other conditions or imperfections on the skin of a patient or otherwise that benefit from reduced pressure treatment. A wound is thus broadly defined as any damaged region of tissue where fluid may or may not be produced. Examples of such wounds include, but are not limited to, acute wounds, chronic wounds, surgical incisions and other incisions, subacute and dehisced wounds, traumatic wounds, flaps and skin grafts, lacerations, abrasions, contusions, burns, diabetic ulcers, pressure ulcers, stoma, surgical wounds, trauma and venous ulcers or the like. The components of the TNP system described herein can be particularly suited for incisional wounds that exude a small amount of wound exudate.

[0038] Some embodiments of the system are designed to operate without the use of an exudate canister. Some embodiments can be configured to support an exudate canister. In some embodiments, configuring the pump assembly **150** and tubing **140** so that the tubing **140** can be quickly and easily removed from the pump assembly **150** can facilitate or improve the process of dressing or pump changes, if necessary. Any of the pump embodiments disclosed herein can be configured to have any suitable connection between the tubing and the pump.

[0039] In some embodiments, the pump assembly **150** can be configured to deliver negative pressure of approximately −80 mmHg, or between about −20 mmHg and −200 mmHg. Note that these pressures are relative to normal ambient atmospheric pressure thus, −200 mmHg would be about 560 mmHg in practical terms. The pressure range can be between about −40 mmHg and −150 mmHg. Alternatively a pressure range of up to −75 mmHg, up to −80 mmHg or over −80 mmHg can be used. Also a pressure range of below −75 mmHg can be used. Alternatively a pressure range of over approximately −100 mmHg, or even 150 mmHg, can be supplied by the pump assembly **150**.

[0040] In some embodiments, the pump assembly **150** is configured to provide continuous or intermittent negative pressure therapy. Continuous therapy can be delivered at above −25 mmHg, −25 mmHg, −40 mmHg, −50 mmHg, −60 mmHg, −70 mmHg, −80 mmHg, −90 mmHg, −100 mmHg, −120 mmHg, −140 mmHg, −160 mmHg, −180 mmHg, −200 mmHg, or below −200 mmHg. Intermittent therapy can be delivered between low and high negative pressure setpoints. Low setpoint can be set at above 0 mmHg, 0 mmHg, −25 mmHg, −40 mmHg, −50 mmHg, −60 mmHg, −70 mmHg, −80 mmHg, −90 mmHg, −100 mmHg, −120 mmHg, −140 mmHg, −160 mmHg, −180 mmHg, or below −180 mmHg. High setpoint can be set at above −25 mmHg, −40 mmHg, −50 mmHg, −60 mmHg, −70 mmHg, −80 mmHg, −90 mmHg, −100 mmHg, −12.0 mmHg, −140 mmHg, −160 mmHg, −180 mmHg, −200 mmHg, or below −200 mmHg. During intermittent therapy, negative pressure at low setpoint can be delivered for a first time duration, and upon expiration of the first time duration, negative pressure at high setpoint can be delivered for a second time duration. Upon expiration of the second time duration, negative pressure at low setpoint can be delivered. The first and second time durations can be same or different values. The first and second durations can be selected from the following range: less than 2 minutes, 2 minutes, 3 minutes, 4 minutes, 6 minutes, 8 minutes, 10 minutes, or greater than 10 minutes. In some embodiments, switching between low and high setpoints and vice versa can be performed according to a step waveform, square waveform, sinusoidal waveform, and the like.

[0041] In operation, the wound filler **130** is inserted into the wound cavity **110** and wound cover **120** is placed so as to seal the wound cavity **110**. The pump assembly **150** provides a source of a negative pressure to the wound cover **120**, which is transmitted to the wound cavity **110** via the wound filler **130**. Fluid (e.g., wound exudate) is drawn through the conduit **140**, and can be stored in a canister. In some embodiments, fluid is absorbed by the wound filler **130** or one or more absorbent layers shown).

[0042] Wound dressings that may be utilized with the pump assembly and other embodiments of the present application include Renasys-F, Renasys-G, Renasys AB, and Pico Dressings available from Smith & Nephew. Further description of such wound dressings and other components of a negative pressure wound therapy system that may be used with the pump assembly and other embodiments of the present application are found in U.S. Patent Publication Nos. 2011/0213287, 2011/0282309, 2012/0116334, 2012/0136325, and 2013/0110058, which are incorporated by reference in their entirety. In other embodiments, other suitable wound dressings can be utilized.

Pump Assembly and Canister

[0043] FIG. **2**A illustrates a front view **200**A of a pump assembly **230** and canister **220** according to some embodiments. As is illustrated, the pump assembly **230** and the canister are connected, thereby forming a device. The pump assembly **230** comprises one or more indicators, such as visual indicator **202** configured to indicate alarms and visual indicator **204** configured to indicate status of the TNP system. The indicators **202** and **204** can be configured to alert a user, such as patient or medical care provider, to a variety of operating and/or failure conditions of the system, including alerting the user to normal or proper operating conditions, pump failure, power supplied to the pump or power failure, detection of a leak within the wound cover or flow pathway, suction blockage, or any other similar or suitable conditions or combinations thereof. The pump assembly **230** can comprise additional indicators. The pump assembly can use a single indicator or multiple indicators. Any suitable indicator can be used such as visual, audio, tactile indicator, and so on. The indicator **202** can be configured to signal alarm conditions, such as canister full, power low, conduit **140** disconnected, seal broken in the wound seal **120**, and so on. The indicator **202** can be configured to display red flashing light to draw user's attention. The indicator **204** can be configured to signal status of the TNP system, such as therapy delivery is ok, leak detected, and so on. The indicator **204** can be configured to display one or more different colors of light, such as green, yellow, etc. For example, green light can be emitted when the TNP system is operating properly and yellow light can be emitted to indicate a warning.

[0044] The pump assembly **230** comprises a display or screen **206** mounted in a recess **208** formed in a case of the pump assembly. The display **206** can be a touch screen display. The display **206** can support playback of audiovisual (AV) content, such as instructional videos. As explained below, the display **206** can be configured to render a number of screens or graphical user interfaces (GUIs) for configuring, controlling, and monitoring the operation of the TNP system. The pump assembly **230** comprises a gripping portion **210** formed in the case of the pump assembly. The gripping portion **210** can be configured to assist the user to hold the pump assembly **230**, such as during removal of the canister **220**. The canister **220** can be replaced with another canister, such as when the canister **220** has been filled with fluid.

[0045] The pump assembly **230** comprises one or more keys or buttons **212** configured to allow the user to operate and monitor the operation of the TNP system. As is illustrated, there buttons **212***a*, **212***b*, and **212***c* are included. Button **212***a* can be configured as a power button to turn on/off the pump assembly **230**. Button **212***h* can be configured as a play/pause button for the delivery of negative pressure therapy. For example, pressing the button **212***b* can cause therapy to start, and pressing the button **212***b* afterward can cause therapy to pause or end. Button **212***c* can be configured to lock the display **206** and/or the buttons **212**. For instance, button **212***c* can be pressed so that the user does not unintentionally alter the delivery of the therapy. Button **212***c* can be depressed to unlock the controls. In other embodiments, additional buttons can be used or one or more of the illustrated buttons **212***a*, **212***b*, or **212***c* can be omitted. Multiple key presses and/or sequences of key presses can be used to operate the pump assembly **230**.

[0046] The pump assembly **230** includes one or more latch recesses **222** formed in the cover. In the illustrated embodiment, two latch recesses **222** can be formed on the sides of the pump assembly **230**. The latch recesses **222** can be configured to allow attachment and detachment of the canister **220** using one or more canister latches **221**. The pump assembly **230** comprises an air outlet **224** for allowing air removed from the wound cavity **110** to escape. Air entering the pump assembly can be passed through one or more suitable filters, such as antibacterial filters. This can maintain reusability of the pump assembly. The pump assembly **230** includes one or more strap mounts **226** for connecting a carry strap to the pump assembly **230** or for attaching a cradle. In the illustrated embodiment, two strap mounts **226** can be formed on the sides of the pump assembly **230**. In some embodiments, various of these features are omitted and/or various additional features are added to the pump assembly **230**.

[0047] The canister **220** is configured to hold fluid (e.g., exudate) removed from the wound cavity **110**. The canister **220** includes one or more latches **221** for attaching the canister to the pump assembly **230**. In the illustrated embodiment, the canister **220** comprises two latches **221** on the sides of the canister. The exterior of the canister **220** can formed from frosted plastic so that the canister is substantially opaque and the contents of the canister and substantially hidden from plain view. The canister **220** comprises a gripping portion **214** formed in a case of the canister. The gripping portion **214** can be configured to allow the user to hold the pump assembly **220**, such as during removal of the canister from the apparatus **230**. The canister **220** includes a substantially transparent window **216**, which can also include graduations of volume. For example, the illustrated 300 mL canister **220** includes graduations of 50 mL, 100 mL, 150 mL, 200 mL, 250 mL, and 300 mL. Other embodiments of the canister can hold different volume of fluid and can include different graduation scale. For example, the canister can be an 800 mL canister. The canister **220** comprises a tubing channel **218** for connecting to the conduit **140**. In some embodiments, various of these features, such as the gripping portion **214**, are omitted and/or various additional features are added to the canister **220**. Any of the disclosed canisters may include or may omit a solidifier.

[0048] FIG. **2**B illustrates a rear view **200**B of the pump assembly **230** and canister **220** according to some embodiments. The pump assembly **230** comprises a speaker port **232** for producing sound. The pump assembly **230** includes a filter access door **234** for accessing and replacing one or more filters, such as antibacterial filters. The pump assembly **230** comprises a gripping portion **236** formed in the case of the pump assembly. The gripping portion **236** can be configured to allow the user to hold the pump assembly **230**, such as during removal of the canister **220**. The pump assembly **230** includes one or more covers **238** configured to as screw covers and/or feet or protectors for placing the pump assembly **230** on a surface. The covers **230** can be formed out of rubber, silicone, or any other suitable material. The pump assembly **230** comprises a power jack **239** for charging and recharging an internal battery of the pump assembly. The power jack **239** can be a direct current (DC) jack. In some embodiments, the pump assembly can comprise a disposable power source, such as batteries, so that no power jack is needed.

[0049] The canister **220** includes one or more feet **244** for placing the canister on a surface. The feet **244** can be formed out of rubber, silicone, or any other suitable material and can be angled at a suitable angle so that the canister **220** remains stable when placed on the surface. The canister **220** comprises a tube mount relief **246** configured to allow one or more tubes to exit to the front of the device. The canister **220** includes a stand or kickstand **248** for supporting the canister when it is placed on a surface. As explained below, the kickstand **248** can pivot between an opened and closed position. In closed position, the kickstand **248** can be latched to the canister **220**. In some embodiments, the kickstand **248** can be made out of opaque material, such as plastic. In other embodiments, the kickstand **248** can be made out of transparent material. The kickstand **248** includes a gripping portion **242** formed in the kickstand. The gripping portion **242** can be configured to allow the user to place the kickstand **248** in the closed position. The kickstand **248** comprises a hole **249** to allow the user to place the kickstand in the open position. The hole **249** can be sized to allow the user to extend the kickstand using a finger.

[0050] FIG. **2**C illustrates a view **200**C of the pump assembly **230** separated from the canister **220** according to some embodiments. The pump assembly **230** includes a vacuum attachment, connector, or inlet **252** through which a vacuum pump communicates negative pressure to the canister **220**. The pump assembly aspirates fluid, such as gas, from the wound via the inlet **252**. The pump assembly **230** comprises a USB access door **256** configured to allow access to one or more USB ports. In some embodiments, the USB access door is omitted and USB ports are accessed through the door **234**. The pump assembly **230** can include additional access doors configured to allow access to additional serial, parallel, and/or hybrid data transfer interfaces, such as SD, Compact Disc (CD), DVD, FireWire, Thunderbolt, PCI Express, and the like. In other embodiments, one or more of these additional ports are accessed through the door **234**.

[0051] Additional description of the pump assembly is disclosed in U.S. patent application Ser. No. 14/210,062, which is incorporated by reference in its entirety.

Electronics and Software

[0052] FIG. **3** illustrates an electrical component schematic **300** of a pump assembly, such as the pump assembly **230**, according to some embodiments. Electrical components can operate to accept user input, provide output to the user, operate the pump assembly and the TNP system, provide network connectivity, and so on. Electrical components can be mounted on one or more printed circuit boards (PCBs). As is illustrated, the pump assembly can include multiple processors. It may be advantageous to utilize multiple processors in order to allocate or assign various tasks to different processors. A first processor can be responsible for user activity and a second processor can be responsible for controlling the pump. This way, the activity of controlling the pump, which may necessitate a higher level of responsiveness (corresponding to higher risk level), can be offloaded to a dedicated processor and, thereby, will not be interrupted by user interface tasks, which may take longer to complete because of interactions with the user.

[0053] The pump assembly can comprise a user interface processor or controller **310** configured to operate one or more components for accepting user input and providing output to the user, such as the display **206**, buttons **212**, etc.

Input to the pump assembly and output from the pump assembly can controlled by an input/output (I/O) module **320**. For example, the I/O module can receive data from one or more ports, such as serial, parallel, hybrid ports, and the like. The processor **310** also receives data from and provides data to one or more expansion modules **360**, such as one or more USB ports, SD ports, Compact Disc (CD) drives, DVD drives. FireWire ports, Thunderbolt ports, PCI Express ports, and the like. The processor **310**, along with other controllers or processors, stores data in one or more memory modules **350**, which can be internal and/or external to the processor **310**. Any suitable type of memory can be used, including volatile and/or non-volatile memory, such as RAM, ROM, magnetic memory, solid-state memory, Magnetoresistive random-access memory (MRAM), and the like.

[0054] In some embodiments, the processor **310** can be a general purpose controller, such as a low-power processor. In other embodiments, the processor **310** can be an application specific processor. The processor **310** can be configured as a "central" processor in the electronic architecture of the pump assembly, and the processor **310** can coordinate the activity of other processors, such as a pump control processor **370**, communications processor **330**, and one or more additional processors **380** (e.g., processor for controlling the display **206**, processor for controlling the buttons **212**, etc.). The processor **310** can run a suitable operating system, such as a Linux, Windows CE, Works, etc.

[0055] The pump control processor **370** can be configured to control the operation of a negative pressure pump **390**. The pump **390** can be a suitable pump, such as a diaphragm pump, peristaltic pump, rotary pump, rotary vane pump, scroll pump, screw pump, liquid ring pump, diaphragm pump operated by a piezoelectric transducer, voice coil pump, and the like. The pump control processor **370** can measure pressure in a fluid flow path, using data received from one or more pressure sensors, calculate the rate of fluid flow, and control the pump. The pump control processor **370** can control a pump motor so that a desired level of negative pressure is achieved in the wound cavity **110**. The desired level of negative pressure can be pressure set or selected by the user. In various embodiments, the pump control processor **370** controls the pump (e.g., pump motor) using pulse-width modulation (PWM). A control signal for driving the pump can be a 0-100% duty cycle PWM signal. The pump control processor **370** can perform flow rate calculations and detect various conditions in a flow path. The pump control processor **370** can communicate information to the processor **310**. The pump control processor **370** can include internal memory and/or can utilize memory **350**. The pump control processor **370** can be a low-power processor.

[0056] A communications processor **330** can be configured to provide wired and/or wireless connectivity. The communications processor **330** can utilize one or more antennas **340** for sending and receiving data. The communications processor **330** can provide one or more of the following types of connections: Global Positioning System (GPS) technology, cellular connectivity (e.g., 2G, 3G, LTE, 4G), WiFi connectivity, Internet connectivity, and the like. Connectivity can be used for various activities, such as pump assembly location tracking, asset tracking, compliance monitoring, remote selection, uploading of logs, alarms, and other operational data, and adjustment of therapy settings, upgrading of software and/or firmware, and the like. The communications processor **330** can provide dual GPS/cellular functionality. Cellular functionality can, for example, be 3G functionality. In such cases, if the GPS module is not able to establish satellite connection due to various factors including atmospheric conditions, building or terrain interference, satellite geometry, and so on, the device location can be determined using the 3G network connection, such as by using cell identification, triangulation, forward link timing, and the like. The pump assembly can include a SIM card, and SIM-based positional information can be obtained.

[0057] The communications processor **330** can communicate information to the processor **310**. The communications processor **330** can include internal memory and/or can utilize memory **350**. The communications processor **330** can be a low-power processor.

[0058] In some embodiments, the pump assembly can track and store various data, such as one or more of positioning data, therapy parameters, logs, device data, and so on. The pump assembly can track and log therapy and other operational data. Data can be stored, for example, in the memory **350**.

[0059] In some embodiments, using the connectivity provided by the communications processor **330**, the device can upload any of the data stored, maintained, and/or tracked by the pump assembly. For example, the following information can be uploaded to a remote computer or server: activity log(s), which includes therapy delivery information, such as therapy duration, alarm log(s), which includes alarm type and time of occurrence; error log, which includes internal error information, transmission errors, and the like; therapy duration information, which can be computed hourly, daily, and the like; total therapy time, which includes therapy duration from first applying a particular therapy program or programs; lifetime therapy information; device information, such as the serial number, software version, battery level, etc.; device location information; patient information; and so on. The device can also download various operational data, such as therapy selection and parameters, firmware and software patches and upgrades, and the like. The pump assembly can provide Internet browsing functionality using one or more browser programs, mail programs, application software (e.g., apps), etc.

[0060] In some embodiments, the communications processor **330** can use the antenna **340** to communicate a location of the pump assembly, such as a location of a housing of the pump assembly, to other devices in the proximity (for example, within 10, 20, or 50 meters and the like) of the pump assembly. The communications processor **330** can perform one-way or two-way communication with the other devices depending on the implementation. The communications transmitted by the communications processor **330** can include identifying information to uniquely identify the pump assembly relative to one or more other pump assemblies also in the proximity of the pump assembly. For example, identifying information can include a serial number or a value derived from the serial number. The signal strength of the transmitted communications by the communications processor **330** can be controlled (for example, maintained at a constant or substantially constant level) to enable another device to determine a distance to the pump assembly, such as a distance between the device and the pump assembly.

[0061] In some embodiments, the communications processor **330** can communicate with other devices in the proximity of the pump assembly so that the communications processor **330** can itself determine a distance from the pump assembly to the other devices. The communications processor **330**, in such embodiments, can track and store the distance from the pump assembly to the other devices or indications of change in the distance over time, and the communications processor **330** can later provide this information to the other devices. For instance, the communications processor **330** can determine a duration of time during which the pump assembly has been removed from a coverage area of a device and subsequently report this time to the device upon being returned to the coverage area.

[0062] FIG. **4** illustrates a firmware and/or software diagram **400** according to some embodiments. A pump assembly **420** includes a user interface processor firmware and/or software **422**, which can be executed by the user interface processor **310**, pump control processor firmware and/or software **424**, which can be executed by the pump control processor **370**, communications processor firmware and/or software **426**, which can be executed by the communications processor **330**, and additional processor(s) firmware and/or software **428**, which can be executed by one or more additional processors **380**. The pump assembly **420** can be connected to a computer **410**, which can be a laptop, desktop, tablet, smartphone, and the like. A wired or wireless connection can be utilized to connect the computer **410** to the pump assembly **420**. For example, a USB connection can be used. The connection between the computer **410** and the pump assembly **420** can be used for various activities, such as pump assembly location tracking, asset tracking, compliance monitoring, selection, uploading of logs, alarms, and other operational data, and adjustment of therapy settings, upgrading of software and/or firmware, and the like. The pump assembly **420** and computer **410** can communicate with a remote computer or server **440** via the cloud **430**. The remote computer **440** can include a data storage module **442** and a web interface **444** for accessing the remote computer.

[0063] The connection between the computer **410** and pump assembly **420** can be utilized to perform one or more of the following: initialization and programming of the pump assembly **420**, firmware and/or software upgrades, maintenance and troubleshooting, selecting and adjusting therapy parameters, and the like. In some embodiments, the computer **410** can execute an application program for communicating the pump assembly **420**.

[0064] The pump assembly **420** can upload various data to the remote computer (or multiple remote computers) **440** via the cloud **430**. As explained above, upload data can include activity log(s), alarm log(s), therapy duration information, total therapy time, lifetime therapy information, device information, device location information, patient information, etc. In addition, the pump assembly **420** can receive and process commands received from the cloud **430**.

Operation of the Pump Assembly

[0065] In some embodiments, the pump assembly **230** can be operated using a touchscreen interface displayed on the screen **206**. Various graphical user interface (GUI) screens present information on systems settings and operations, among other things. The touchscreen interface can be actuated or operated by a finger (or a stylus or another suitable device). Tapping a touchscreen cam result in making a selection. To scroll, a user can touch screen and hold and drag to view the selections. Additional or alternative ways to operate the touchscreen interface can be implemented, such as multiple finger swipes for scrolling, multiple finger pinch for zooming, and the like.

[0066] FIGS. **5**A-**5**I illustrate graphical user interface screens according to sonic embodiments. The GUI screens can be displayed on the screen **206**, which can be configured as a touchscreen interface. Information displayed on the screens can be generated based on input received from the user. The GUI screens can be utilized for initializing the device, selecting and adjusting therapy settings, monitoring device operation, uploading data to the network (e.g., cloud), and the like. The illustrated GUI screens can be generated directly by an operating system running on the processor **310** and/or by a graphical user interface layer or component running on the operating system. For instance, the screens can be developed using Qt framework available from Digia.

[0067] FIG. **5**A illustrates a therapy settings screen **500**A according to some embodiments. The therapy settings screen **500**A can be displayed after the pump assembly has been initialized (e.g., screen **500**A can function as a home screen). The therapy settings screen **500**A includes a status bar **502** that comprises icons indicating operational parameters of the device. Animated icon **503** is a therapy delivery indicator. When therapy is not being delivered, icon **503** can be static and displayed in a color, such as gray. When therapy is being delivered, icon **503** can turn a different color, such as orange, and becomes animated, such as, rotates, pulsates, become filled with color (see FIG. **5**C), etc. Other status bar icons include a volume indicator and a battery indicator, and may include additional icons, such as wireless connectivity. The therapy settings screen **500**A includes date/time and information. The therapy settings screen **500**A includes a menu **510** that comprises menu items **512** for accessing device settings, **514** for accessing logs, **516** for accessing help, and **518** (see, for example, FIGS. **5**C and **5**E) for returning to the therapy settings screen home screen) from other screens. The pump assembly can be configured so that after a period of inactivity, such as not receiving input from the user, therapy settings screen **500**A (or home screen) is displayed. Additional or alternative controls, indicators, messages, icons, and the like can be used.

[0068] The therapy settings screen **500**A includes negative pressure up and down controls **522** and **524**. Up and down controls **522** and **524** can be configured to adjust the negative pressure setpoint by a suitable step size, such as ±5 mmHg. As is indicated by label **526**, the current therapy selection is −80 mmHg (or 80 mmHg below atmospheric pressure). The therapy settings screen **500**A includes continuous/intermittent therapy selection **530**. Continuous therapy selection screen can be accessed via control **532** and intermittent therapy selection screen can be accessed via control **534**. As is illustrated, the current therapy setting is to continuously deliver negative pressure at −80 mmHg. As is indicated by message **528**, therapy delivery can be initiated by pressing a button, such as button **212***b* on the pump assembly **230**. The therapy settings screen **500**A includes Y-connector selection **535** for treating multiple wounds, such as two, three, etc. wounds, with one pump assembly **230**. Control **536** selects treatment of a single wound, and control **538** selects treatment of more than one wound by the

pump assembly. As is indicated by the label "Y-CONNECT OFF," the current selection is to treat a single wound. Additional or alternative controls, indicators, messages, icons, and the like can be used.

[0069] FIG. **5**B illustrates therapy settings screen **500**B for delivering intermittent therapy according to some embodiments. Screen **500**B can be accessed via control **534**. Therapy settings screen **500**B includes intermittent therapy settings **540** and **545**. As is illustrated by settings of controls **542**, **544**, **546**, and **548**, respectively, current therapy selection is applying −80 mmHg of reduced pressure for 5 minutes followed by 2 minutes of applying atmospheric pressure (or turning off the vacuum pump). Such treatment cycles can be repeated until stopped by the user or by the pump assembly **230**. Negative pressure levels and time durations can be adjusted by selecting one or more of controls **542**, **544**, **546**, and **548** and operating the up or down controls **522** or **524** until desired values are selected. In some implementations, more than two negative pressure values and corresponding durations can be selected for treatment of a wound. For example, a user can select three or more negative pressure values and corresponding durations. Additional or alternative controls, indicators, messages, icons, and the like can be used.

[0070] FIG. **5**C illustrates therapy delivery screen **500**C according to some embodiments. Screen **5000** can be accessed by selecting desired therapy settings on the screen **500**A or **500**B and initiating therapy, such as by pressing the button **212***b*. As is illustrated, label **552** ("Delivering Therapy") indicates that continuous therapy at −120 mmHg of reduced pressure (label **560**) is being delivered to a wound. Animated icon **503** indicates that therapy is being delivered by cycling though an animation. As is illustrated in FIGS. **5**C and **5**D, icon **503** is an energy burst having multiple petals, and the animation sequences through the petals becoming filled with orange color. Any other suitable animation or combination of animations can be used. Message **529** indicates that therapy settings can be stopped or paused by pressing a button, such as button **212***b*, on the pump assembly **230**. Menu item **518** can be configured to return to the therapy settings screen (or home screen) **500**A. Additional or alternative controls, indicators, messages, icons, and the like can be used.

[0071] FIG. **5**D illustrates therapy delivery screen **500**D according to some embodiments. Screen **500**D can be displayed after the user has selected desired therapy settings on the screen **500**B and has initiated therapy, such as by pressing button the **212***b*. As is illustrated, intermittent therapy is being delivered to a wound. Label **551** and timer **554**, respectively, indicate that negative pressure of −120 mmHg is being delivered to the wound for 5 minutes. Timer **554** can be configured to show the remaining amount of time, for example, as a number "5 min"), as a relative amount (e.g., by adjusting the fill of the circle), and a combination of the two. Labels **555** and **556**, respectively, indicate that 0 mmHg (or atmospheric pressure) is scheduled to be delivered to the wound for duration of 2 minutes upon expiration of the time period (e.g., 5 minutes) for delivering the first amount of negative pressure (e.g., −120 mmHg). Message **553** ("Leak Check") indicates that the pump assembly **230** is performing a leak check. As is further explained below, the pump assembly **230** can perform a leak check when it initiates delivery of negative pressure therapy to determine if the fluid flow path is sufficiently free of leaks (e.g., is properly sealed). Once it has been determined that no significant leaks are present, message **553** can indicate this fact to the user, such as by displaying the message "Seal Achieved." Menu item **518** can be configured to return to the therapy settings screen (or home screen). Additional or alternative controls, indicators, messages, icons, and the like can be used.

[0072] FIG. **5**E illustrates settings screen **500**E according to some embodiments. The settings screen **500**E can be accessed by selecting menu item **512** (e.g., from screen **500**A or **500**B). As is illustrated, settings screen **500**E includes a menu **560** for adjusting various operational parameters of the pump assembly **230**, including alarm volume setting, compression setting **562**, user mode setting (e.g., clinician or patient), language setting, time zone setting, flow meter **564**, restore presets (e.g., factory presets), and device information. Attempting to set the user mode as clinician mode may prompt the user to enter a password or satisfy any other suitable security check. Operating the pump assembly in clinician mode can provide unrestricted access to all features and settings, whereas operating the pump assembly in patient mode can prevent inadvertent changes to therapy settings by preventing access to one or more features and settings, such as therapy settings, compression settings, and the like. Alternative or additional menu items can be displayed. The illustrated menu **560** is an expanded version of the menu showing all menu items. In use, menu **560** may only partially fit on the screen, and the menu items can be accessed via the scroll bar **561** or via any other suitable alternative or additional controls. Additional or alternative controls, indicators, messages, icons, and the like can be used.

[0073] FIG. **5**F illustrates compression settings screen **500**F according to some embodiments. The screen **500**F can be accessed by selecting the menu item **562**. The screen **500**F includes three compression settings selections: low **572**, medium **574**, and high **576**. As is explained below, these selections control the time it takes to reach a desired or set vacuum level at the wound. For example, selecting a high compression **576** will result in the most rapid wound dressing draw down. Menu item **519** can be configured to return to the settings screen **500**E. In certain embodiments, compression settings screen **500**F may be accessed only if clinician mode has been previously selected. A clinician may select appropriate compression setting based on one or more physiological parameters, such as wound type, patient's age, physical condition, etc. Additional compression settings, such as very low, very high, and the like can be provided. Additional or alternative controls, indicators, messages, icons, and the like can be used.

[0074] FIG. **5**G illustrates flow meter screen **500**G according to some embodiments. The screen **500**G can be accessed by selecting the menu item **564** in FIG. **5**E. The screen **500**G can visually depict the determined or calculated rate of air (or gas) flow in the fluid flow path, which can include the therapy unit assembly, wound dressing, and tubing connecting the therapy unit assembly to the wound dressing. The screen **500**G illustrates a gauge **580** that visually depicts the determined flow rate and can be used for detection of one or more leaks in the fluid flow path. Other controls for depicting the flow rate can be alternatively or additionally used, such as horizontal or vertical bars, digital gauges, labels, and the like.

[0075] As is illustrated, the gauge **580** includes a dial **584** with markings **581** indicating absence of leaks or a very small leak (positioned at the beginning of the dial), **582** indicating medium leak (positioned at the middle of the dial), and **583** indicating high leak (positioned at the end of the dial). The gauge **580** also includes a needle **585** that indicates the determined leak rate on the dial **584**. The dial **584** can be configured to be filled in various colors that visually indicate the leak rate. For example, green color can indicate a low level leak, yellow color can indicate a higher level (or significant) leak, and red color can indicate a leak of a high level. As is depicted by the position of the needle **585** being between the marking **582** (middle of the dial) and **583** (end or maximum setting of the dial), a fairly severe leak has been detected. The gauge **580** can assist a user in locating leaks. Other controls for depicting the leak rate can be alternatively or additionally used, such as horizontal or vertical bars, digital gauges, labels, and the like.

[0076] FIG. **5**H illustrates flow meter screen **50011** according to some embodiments. In contrast with the screen **500**G, screen **500**H illustrates a lower detected leak. This is depicted by the needle **585** being positioned closer to the marking **581** (e.g., needle **585** is to the left of marking **582**). In some embodiments, detection of leaks exceeding a certain threshold may trigger an alarm. That is, in the event of a low vacuum level at the wound (e.g., due to high leak), the flow meter screen **500**G can be displayed to help locate the leak (or leaks) in the fluid flow path. Flow meter screen **500**G or **500**H can be displayed while therapy is being delivered by the pump assembly, as is illustrated by the animated icon **503**.

[0077] FIG. **5**I illustrates alarms and troubleshooting screen **500**I according to some embodiments. The screen **500**I can be accessed by selecting the menu item **516** for accessing help (see FIG. **5**E) and selecting alarms menu item from the help screen (not shown). As is illustrated, screen **500**I includes a menu **588** with menu items for various alarm and troubleshooting categories, including over vacuum, high vacuum, blockage, canister flow, high flow/leak, and low or insufficient vacuum (as explained below) as well as technical failure (e.g., unrecoverable error), battery (e.g., low battery, critical low battery, battery failed), and inactivity (e.g., pump assembly is powered on an has been left without user interaction for longer than a certain period of time, such as 15 minutes). Alternative or additional menu items can be displayed. Accessing a particular menu item can bring up a screen with step-by-step instructions to assist in resolving the corresponding alarm. The instructions can include a combination of text, audio, video, etc. The illustrated menu **588** is an expanded version of the menu showing all menu items. In use, menu **588** may only partially fit on the screen, and menu items can be accessed via the scroll bar **587** or via any other suitable alternative or additional controls. Additional or alternative controls, indicators, messages, icons, and the like can be used.

[0078] FIGS. **6**A-**6**G illustrate alarm screens according to some embodiments. The illustrated screens can be displayed in response to a condition or set of conditions detected by the pump assembly in order to alert the user. In the event of an alarm, for example, the therapy unit can perform one or more of the following: sound an audible alarm, display an alarm screen, illuminate the indicator **204** in a specific color, such as yellow. The therapy unit can be configured to stop or suspend delivering therapy in the occurrence of an over vacuum or high vacuum alarm. If occurrence of other alarms is detected, the therapy unit can continue delivery of therapy.

[0079] FIG. **6**A illustrates a blockage alarm screen **600**A according to some embodiments. Indicator **601** indicates alarm condition. Label **602** is a description of the alarm (e.g., "WARNING BLOCKAGE"). Icon **603** is configured to return the home screen, such as screen **500**A. Labels **604** and **605** respectively provide information about current therapy settings. As is illustrated, continuous therapy at −25 mmHg of reduced pressure is being applied to a wound. Label **606** provides suggested action to correct the alarm (e.g., "Tubing or canister may be blocked"). Icon **607** is configured to bring up alarms and troubleshooting screen **500**I in case the user desires more detailed information regarding the alarms and troubleshooting. Icon **608** is configured to silence the alarm permanently or temporarily. For some alarms, such as non-critical alarms, audible tones can be temporarily silenced by selecting icon **608**. If the audible alarm has been temporarily silenced and a new alarm occurs, the audible alarm for the new alarm may sound and the new alarm may be displayed. When multiple alarm messages are present, the therapy assembly can alternate between the alarm screens.

[0080] Blockage alarm screen **600**A can indicate detection of a blockage in the flow path, such as in a conduit connecting the canister (or pump in a canisterless system) with the wound dressing. The alarm may be resolved by clearing the blockage. The pump assembly may continue to attempt to provide desired therapy to the wound after blockage has been detected.

[0081] FIG. **6**B illustrates an over vacuum alarm screen **600**B according to some embodiments. As is illustrated, the description of the alarm is "OVER VACUUM," and suggested action to correct the alarm is "Power Off/Power On to clear." This alarm screen can indicate that the therapy unit has detected an excessively high vacuum in the fluid flow path (e.g., exceeding −235 mmHg or any other suitable value), potentially due to device malfunction. The pump assembly can be configured to stop or suspend delivering therapy until the over vacuum condition has been corrected. An audible alarm can be generated, which may not be paused (hence the icon **608** is not displayed in the screen **600**B). As suggested, the alarm may be resolved by power cycling the pump assembly.

[0082] FIG. **6**C illustrates a high vacuum alarm screen **600**C according to some embodiments. As is illustrated, the description of the alarm is "HIGH VACUUM," and suggested action to correct the alarm is "Power Off/Power On to clear." This alarm screen can indicate that the therapy unit has detected a high vacuum condition (e.g., exceeding −15 mmHg above the therapy setpoint or any other suitable value), potentially due to a blockage or device malfunction. The pump assembly can be configured to stop or suspend delivering therapy until the high vacuum condition has been corrected. An audible alarm can be generated, which may not be paused (hence the icon **608** is not displayed in the screen **600**C). As suggested, the alarm may be resolved by power cycling the pump assembly.

[0083] FIG. **6**D illustrates a canister full alarm screen **600**D according to some embodiments. As is illustrated, the description of the alarm is "CANISTER FULL" because it has been detected that the canister is full or the internal canister filter is covered with fluid. The alarm may be resolved by replacing the canister. The pump assembly may continue to attempt to provide desired therapy to the wound.

The alarm may be silenced. In some systems, such as in canisterless systems where a dressing is configured to absorb fluid removed from the wound, dressing full condition or dressing filter occluded condition can be detected and indicated in a manner similar to the canister full condition.

[0084] FIG. **6**E illustrates a low vacuum alarm screen **600**E according to some embodiments. As is illustrated, the description of the alarm is "LOW VACUUM" because the detected pressure at the wound is lower than the desired negative pressure by a threshold amount, such as −15 mmHg or another suitable value. Additionally or alternatively, low vacuum condition can be detected if there is a leak in the fluid flow path that persists for longer than threshold duration, such as 30 seconds or any other suitable value. The alarm may be resolved by checking the connections in the fluid flow path for leaks or checking the dressing for leaks. The pump assembly may continue to attempt to provide desired therapy to the wound. In some embodiments, the gauge **580** may be displayed on the screen **600**E, as is explained below in connection with FIG. **6**F. The alarm may be silenced.

[0085] FIG. **6**F illustrates a leak alarm screen **600**F according to some embodiments. As is illustrated, the description of the alarm is "LEAK" because a significant leak (e.g., a leak that exceeds a certain threshold leak rate) has been detected for a threshold duration, such as for longer than 2 minutes or any other suitable value. As is illustrated, the leak alarm screen **600**F includes the gauge **580** illustrating the leak rate detected in the fluid flow path. As is illustrated by the position of the needle **585**, a high flow leak has been detected, which has triggered the leak alarm. The alarm may be resolved by checking the connections in the fluid flow path for leaks or checking the dressing for leaks. The gauge **580**, which illustrates the detected leak rate, can assist in identifying and resolving leaks. The pump assembly may continue to attempt to provide desired therapy to the wound. The alarm may be silenced.

[0086] FIG. **6**G illustrates an alarm resolved screen **600**G according to some embodiments. Screen **600**G can be displayed upon resolution of alarms detected by the therapy unit. Screen **600**G can be displayed for a period of time and then be replaced by a therapy deliver screen. The alarm may be silenced.

[0087] Any of the screens depicted in FIGS. **6**A-**6**G may include additional or alternative controls, indicators, messages, icons, and the like. In some embodiments, additional or alternative screens may be used for alerting the user to one or more alarms.

Canister Stiffener

[0088] In some embodiments, a canister, such as the canister **220**, is made out of plastic or another type of material that may deform under application of sufficiently high vacuum pressure. Such deformations may be undesirable as they may reduce the capacity of the canister and risk breakage and malfunction. While plastic material provides a multitude of advantages, such as being inexpensive, lightweight, easy to manufacture, and the like, it is beneficial to address the deformability of the material when sufficient vacuum pressure is applied to the wound by the pump assembly **230**.

[0089] FIG. **7**A illustrates an 800 mL canister **700**A with a reinforcement element or stiffener **710** according to some embodiments. The stiffener **710** helps to reinforce the canister and to prevent collapsing of the canister **700**A when sufficiently high vacuum pressure is applied to the wound. As is illustrated, the stiffener **710** is attached (e.g., sealed, glued, molded, etc.) to the front wall of the canister **700**A (e.g., wall with volume gradations). The stiffener can be attached to a location on the front wall different than that illustrated in FIG. **7**A or be attached to any suitable location on any wall other than the front wall. FIG. **7**B illustrates another view of an 800 mL canister **700**B that utilizes the stiffener **710**.

[0090] The stiffener **710** is illustrated in FIG. **7**C. The stiffener **710** has a base element **712** that is configured to be attached to the wall of the canister and a member or component **714** that protrudes or extends from the base element **712** toward the opposite wall when negative pressure is not being applied to the wound. The component **714** may be long enough so that at least a part of the component contacts the opposite wall of the canister when negative pressure is not applied to the canister. Alternatively, the component **714** may come into contact the opposite wall when sufficient negative pressure is applied to the canister. As is illustrated, the component **714** extends at about a perpendicular angle from the base element **712**. Alternatively, the component **714** can extend at any suitable angle. The stiffener **710** may be small and lightweight. As is illustrated, the stiffener **710** may have one or more circular holes **716** of different (or same) diameter stamped in the component **714**. The one or more holes can make the stiffener **710** lighter. Alternatively or additionally, the stiffener **710** may have one or more holes of any suitable shape, such as rectangular, triangular, elliptic, or any other regular or irregular shape. In case more than one hole is stamped, the holes may have similar shapes and dimensions or different shapes and/or dimensions. The one or more voids can be stamped in the base element **712** and/or the component **714**. Although FIG. **6**C, illustrates a rectangular base element **712** and a hexagonal component **714** are rectangular, the base element **712** and/or the component **714** may have any other suitable shape.

[0091] The dimensions and thickness of the stiffener as well as its geometry can be selected based on the geometry and capacity of the canister and negative pressure levels that the canister will be exposed to. For example, for the 800 mL canister as is illustrated in FIGS. **7**A and **7**B, the length and height of the base element **712** can be about 1.71 inches and 1.37 inches respectively. The length of the component **714** (along its longest dimension) can be about 1.57 inches and the height of the component **714** (along its tallest dimension) can be about 1.94 inches. In other embodiments, other suitable geometries and dimensions can be used.

[0092] It is advantageous to use a stiffener, such as the stiffener **710**, in order to prevent or minimize collapse or deformation of the canister when vacuum pressure is applied. In some embodiments, more than one stiffener **710** can be utilized. In other embodiments, the stiffener **710** (or multiple stiffeners) can be attached to any suitable location on the back wall, side walls, and so on. In alternate embodiments, the stiffener **710** may not be used. Instead, for example, one or more ribs can be placed on the walls of the canister, the walls of the canister may be made thicker to prevent or resist collapsing or the walls may be made of stiffer material, etc.

Delivery of Negative Pressure Wound Therapy

[0093] In some embodiments, the pump assembly controls the vacuum pump to deliver negative pressure therapy to a wound according to a selected or programmed protocol. Pump control can be performed by the pump control processor **370** alone or in combination with the processor **310**. For example, as explained above, the user can select continuous operation at a desired pressure (or negative pressure setpoint). The pump assembly can activate the vacuum pump to reduce or draw down the pressure at the wound (e.g., under the dressing) to reach the setpoint. As explained below, the drawdown can be performed by increasing the negative pressure at the wound limited by a maximum change in negative pressure per unit time called compression, until the setpoint has been achieved. Wound drawdown can be defined as the period of time immediately after therapy has been initiated during which the wound has not yet achieved the setpoint. As explained below, at the end of this period when the setpoint is achieved, the flow rate in the fluid flow path should be below a leak (or high flow) threshold and above a low vacuum threshold, otherwise an appropriate alarm will be activated.

[0094] FIG. **8** illustrates a process **800** for providing negative pressure wound therapy according to some embodiments. The process **800** can be executed by the pump control processor **370** alone or in combination with the processor **310**. The process **800** can be periodically executed, such as for example every 100 milliseconds (or 10 times per second) or at any other suitable frequency. Alternatively or additionally, the process **800** can be continuously executed.

[0095] The process **800** can begin in block **802**, which it can transition to when therapy is initiated or when the setpoint is changed while therapy is being delivered. In block **802**, the process **800** compares wound pressure, which can be determined as explained below, to the setpoint. If the wound pressure is below the setpoint, the process **800** can transition to block **804**. Conversely, if the wound pressure exceeds or is equal to the setpoint, the process **800** can transition to block **806**.

[0096] In block **804** (pressure ramp up), the process **800** can increment a pump ramp setpoint by an amount that depends on the compression setting as explained below. The vacuum pump will then attempt to draw down the wound pressure to reach the current value of the pump ramp setpoint. For example, a suitable pump drive signal, such as voltage or current signal, can be generated and supplied to the pump motor so as to increase the speed of the pump motor to achieve wound draw down. For purposes of efficiency, the pump motor can be driven using PWM or any other suitable method. The process **800** can continue incrementing the pump ramp setpoint until it reaches the setpoint selected by the user. The process **800** can transition to block **808** when the wound pressure has nearly reached or reached the setpoint. For example, the process **800** can transition to block **808** when the wound pressure is within a ramp up threshold pressure of the setpoint, such as within 2 mmHg of the setpoint or within any other suitable value.

[0097] In block **806** (pressure ramp down), the process **800** can set the pump ramp setpoint to the setpoint selected by the user. The process **800** can deactivate the pump so that the wound pressure is allowed to decay, such as due to one or more leaks in the fluid flow path, to reach or almost reach the setpoint. At this point, the process **800** can transition to block **808**. For example, the process **800** can transition to block **808** when the wound pressure is within a ramp down threshold pressure of the setpoint, such as within 5 mmHg of the setpoint or within any other suitable value. In some cases, the ramp down threshold pressure can be the same as the ramp up threshold pressure.

[0098] In block **808** (steady state), the pump ramp setpoint can be set to the setpoint selected by the user. The process **800** can control the vacuum pump to maintain the desired negative pressure at the wound. One or more conditions, such as high vacuum, low vacuum, leak, and the like can be detected in block **808** as is explained below. If the user changes the setpoint to be more negative or more positive or if delivery of therapy is paused, the process **800** can transition to block **802**.

[0099] In some embodiments, the pump assembly controls the vacuum pump to draw down the wound (e.g., as is explained above in connection with block **804**) by utilizing compression. Using compression can be beneficial for avoiding rapid changes in wound pressure, which can minimize patient discomfort, reduce noise produced as a result of operating the pump, maintain efficient delivery of negative pressure, maintain efficient use of power (e.g., battery power), and the like. Compression can be executed by the process **800**, which in turn can be implemented by the pump control processor **370** alone or in combination with the processor **310**. Compression can correspond to the maximum desired increase in negative pressure at the wound per unit of time. Compression can be determined based on the negative pressure setpoint and selected compression setting (e.g., low, medium, or high) as explained above in connection with FIG. **5**F.

[0100] Compression can be utilized when the wound is expected to experience a significant increase in negative pressure. This can occur when: (1) therapy is initiated on a deflated wound, and negative pressure will increase from zero or substantially zero to reach the pressure setpoint at the wound; (2) therapy is active in intermittent mode and during transitions from a low negative pressure setpoint to a high negative pressure setpoint, negative pressure will increase to reach the higher pressure setpoint at the wound; (3) therapy is active and the setpoint has been changed to a more negative pressure value, which will cause negative pressure to be increased to reach the higher pressure setpoint at the wound. Additional situations in which compression may be utilized include, for example, when a leak is introduced after seal has been achieved, which can cause negative pressure at the wound to rapidly drop and the vacuum pump to increase or ramp up delivery of negative pressure in an attempt to maintain pressure. Once the leak has been corrected, the pump would attempt to rapidly restore setpoint pressure at the wound.

[0101] Compression can be achieved by maintaining a secondary negative pressure setpoint target that represents the negative pressure setpoint allowed by compression as a function of time. The secondary setpoint can correspond to the pump ramp setpoint. Secondary setpoint can be incremented based on the selected compression setting. Secondary setpoint can be incremented by a suitable amount every time process **800** is executed, such as 10 times a second or any other suitable frequency. For example, if low compression setting has been selected, the secondary setpoint can be incremented by −0.6 mmHg, which can result in negative pressure ramp up of no more than approximately −8 mmHg per second (assuming that pump rate is incremented 10

times a second, such as a result of executing the process **800**). If medium compression setting has been selected, the secondary setpoint can be incremented by −2 mmHg, which can result in negative pressure ramp up of no more than approximately −20 mmHg per second. If high compression setting has been selected, the secondary setpoint can be incremented by −4 mmHg, which can result is negative pressure ramp up of no more than approximately −40 mmHg per second. These values are illustrative and any other suitable values can be used.

[0102] In sonic embodiments, the pump assembly monitors various parameters, such as pressure and rate of flow in the fluid flow path, in order to control the pump in connection with delivery of negative pressure wound therapy. Parameters monitoring and pump control can be performed by the pump control processor **370** alone or in combination with the processor **310**. Monitoring the flow rate can be used, among other things, to ensure that therapy is properly delivered to the wound, to detect leakages, blockages, high pressure, and low vacuum, canister full, and the like.

[0103] The pump assembly can be configured to indirectly measure the flow rate in the fluid flow path. For example, the pump assembly can measure the speed (e.g., as frequency) of the vacuum pump motor by using a tachometer. Alternatively or additionally, the pump assembly can measure a level of activity or duty cycle of the pump using any suitable approach, such as by monitoring voltage or current supplied to the pump, sensing pump speed (e.g., by using a Hall sensor), measuring back EMF generated by the pump motor, and the like. Tachometer readings can be averaged in order to mitigate the effects of one or more errant readings. A number of most recent tachometer readings, such as over last 2.5 seconds or any other suitable time period, can be averaged to obtain short tachometer average. A number of less recent tachometer readings, such as over the last 30 seconds or any other suitable time period, can be averaged to obtain long tachometer average. Short and long tachometer averages can be utilized for pump control. Additionally or alternatively, the pump assembly can directly measure the flow rate, such as by using a flow meter.

[0104] Flow rate can be estimated as the air or gas volume moving over the wound per unit of time normalized to standard temperature and standard pressure (e.g., 1 atm). Flow rate can be periodically computed, such as every 250 milliseconds or any other suitable time value, according to the following formula:

$$\text{Flow Rate}=\text{Slope}*\text{Tachometer}+\text{Intercept}$$

[0105] Tachometer is short tachometer average (e.g., in Hz) and Slope and Intercept are constants that are based on the pressure setpoint. The values for Slope and Intercept can be determined for possible pressure setpoints (e.g., −25 mmHg, −40 mmHg, −50 mmHg, −60 mmHg, −70 mmHg, −80 mmHg, −90 mmHg, −100 mmHg, −120 mmHg, −140 mmHg, −160 mmHg, −180 mmHg, −200 mmHg) for a given vacuum pump type. The flow as a function of the pump speed may not be a best fit as a single line because the vacuum pump can be designed to be more efficient at lower flow rates. Because of this, slope and intercept values can be pre-computed for various setpoints and various pumps. Flow rate can be measured in standard liters per minute (SLPM) or any other suitable measurement unit. As explained below, the determined flow rate can be compared to various flow rate thresholds, such as blockage threshold, leakage threshold, and maximum flow rate threshold, to determine a presence of a particular condition, such as a blockage, leakage, over vacuum, etc.

[0106] In addition, the pump assembly can determine and monitor pressure in the flow path using one or more sensors. In some embodiments, the pump assembly includes a pressure sensor in or near the inlet **252** (or canister connection) of the pump assembly **230**. This pressure sensor can measure the pressure in the canister (or in or near the dressing in a canisterless system). The arrangement of one or more pressure sensors in disclosed in U.S. patent application Ser. No. 14/210,062, which is incorporated by reference in its entirety. The pump assembly can continuously measure pressure in the canister, such as every millisecond or any other suitable duration. A suitable number of latest pressure sensor readings can be averaged to mitigate the effects of one or more errant readings.

[0107] Wound pressure can be estimated using the measured canister pressure and the pump speed. Because of presence of one or more leaks in the flow path, wound pressure may not be the same as canister pressure. For example, wound pressure may be lower or more positive than canister pressure. In some embodiments, wound pressure is estimated using the following formula:

$$\text{Wound Pressure}=\text{Canister Pressure}-(\text{Slope}*\text{Tachometer Intercept})$$

[0108] Canister Pressure is averaged measured canister pressure. As explained above, Tachometer is short tachometer average and Slope and Intercept are constants that are based on the pressure setpoint. The values for Slope and Intercept are not necessarily same value as used above for determining the flow rate. Additionally or alternatively, wound pressure can be measured directly by a pressure sensor placed in the wound or near the wound or under the dressing.

[0109] Based on the determined flow rate, canister pressure, and wound pressure values, the pump assembly can monitor and detect various operating conditions. One or more of these conditions can be detected by the process **800** while the process in block **808**. Blockage in the fluid flow path can be determined by comparing the flow rate, as reflected by long tachometer average, to a particular blockage threshold over or during a period of time, such as 2 minutes or any other suitable duration. The blockage threshold can be selected or determined based on the particular pressure setpoint. That is, to detect blockage, the pump assembly can utilize a plurality of blockage thresholds corresponding to particular pressure setpoints. As explained above, the flow rate can be indirectly determined by detecting and monitoring the pump speed. Long tachometer average can be compared to the blockage threshold. Alternatively or additionally, short tachometer average or any other suitable measure of flow rate can be compared to the blockage threshold.

[0110] If the threshold is satisfied during a duration of a period of time, the pump assembly determines that there is a blockage in the fluid flow path and provides an indication (e.g., alarm screen). For example, to determine presence of a blockage, the pump assembly can determine whether the long tachometer average satisfies or exceeds the blockage threshold during a 2 minute period of time or during any other suitable period of time. Because long tachometer average may be updated at periodic time intervals due to periodic sampling of the tachometer, the pump assembly

may compare the long tachometer average as it is being updated to the blockage threshold over the 2 minute period of time. Blockage can be detected provided that each long tachometer average determined during the 2 minute interval satisfies or exceeds the blockage threshold. Alternatively or additionally, blockage can be detected if the majority of sampled long tachometer averages, such as 9 out of 10 or any other suitable number, satisfy or exceed the blockage threshold. Detected blockage may be cleared when the long tachometer average falls below the blockage threshold for a period of time, such as 5 seconds or any other suitable duration. Blockage detection may be suspended while the process **800** is in block **806**.

[0111] When the pump is off, such as when intermittent therapy is applied with one of the pressure setpoints being set to zero, and negative pressure at the wound is expected to decrease (or become more positive) due to leaks, blockage can be detected by determining whether the pressure level at the wound is decreasing or decaying as expected. For example, the drop in pressure at the wound can be computed over a period of time, such as 30 seconds or any other suitable duration. A blockage may be present if the wound pressure at the end of the period of time has not decreased to satisfy (e.g., exceed) a pressure decay threshold.

[0112] The pump assetribly can detect and provide indication of a low vacuum condition by determining whether the canister pressure satisfies (e.g., falls below or is more positive than) a low vacuum pressure threshold during a period of time, such as 30 seconds or any other suitable duration. The low vacuum pressure threshold can be selected or determined based on the pressure setpoint. Low vacuum detection may be suspended while the process **800** is in block **806**. Detected low vacuum can be cleared when the canister pressure exceeds the low vacuum pressure threshold for a period of time, such as 5 seconds or any other suitable value. Alternatively or additionally, the pump assembly can compare the measured wound pressure with the low vacuum pressure threshold.

[0113] The pump assembly can detect and provide indication of a high vacuum condition by determining whether the canister pressure satisfies (e.g., exceeds) a particular high vacuum pressure threshold during a period of time, such as 30 seconds or any other suitable duration. The high vacuum pressure threshold can be selected or determined based on the pressure setpoint. High vacuum detection may be suspended while the process **800** is in block **806**. Detected high vacuum may be cleared by power cycling the pump assembly or by another other suitable means, such as by determining that the canister pressure falls below the high vacuum pressure threshold for a period of time, such as 5 seconds or any other suitable duration. Alternatively or additionally, the pump assembly can compare the measured wound pressure with the high vacuum pressure threshold.

[0114] The pump assembly can detect and provide indication of an over vacuum (or excessive vacuum) condition by determining whether the canister pressure satisfies (e.g., exceeds) an over vacuum threshold, such as −250 mmHg or any other suitable value, during a period of time, such as 2 seconds or any other duration. Detected over vacuum may be cleared by power cycling the pump assembly or by another other suitable means, such as by determining that the canister pressure falls below the over vacuum pressure threshold for a period of time, such as 5 seconds or any other suitable duration. Alternatively or additionally, the pump assembly can compare the wound pressure with the over vacuum threshold.

[0115] The pump assembly can detect and provide indication of a leak condition by determining whether the short tachometer average satisfies a leak threshold during a period of time, such as 2 minutes or any other suitable duration. The leak threshold can be selected or determined based on the pressure setpoint. For example, the pump assembly can determine whether the short tachometer average exceeds the leak threshold over a 2 minute period as the vacuum pump is attempting to reach and/or maintain the desired setpoint in the presence of one or more leaks. Alternatively or additionally, the pump assembly can compare the long tachometer average with the leak threshold. Leak detection may be suspended while the process **800** is in block **806**. Detected leak may be cleared when the short tachometer average falls below the leak threshold for a period of time, such as 5 seconds or any other suitable duration. Alternatively or additionally, long tachometer average or any other suitable measure of flow rate can be compared to the leak threshold.

[0116] The pump assembly can detect and provide indication of a canister full condition. This determination can be made in when the process **800** is in block **808**. First, the pump assembly can determine whether the short tachometer average is below the leak threshold and the canister pressure exceeds (or is more negative than) the low vacuum pressure threshold. As is indicated by the short tachometer average being below the leak threshold, there are leak or leaks in the fluid flow path while there is no low vacuum condition detected, as is indicated by canister pressure being above the low vacuum pressure threshold (e.g., canister pressure is normal). That is, the determination of canister pressure remaining at a normal level while presence of a significant leak in the fluid flow path has been detected (e.g., as indicated by pump speed being fairly low), provides an indication that the canister may be full (e.g., canister filter may be blocked).

[0117] After it has been determined that the short tachometer average is below the leak threshold and the canister pressure exceeds the low vacuum pressure threshold, determination of whether the canister if full is performed based at least in part on measuring characteristics of pressure pulses or signals in the fluid flow path. During operation, the pump generates pressure pulses or signals that are propagated through the fluid flow path. The pressure signals, which can be detected by a pressure sensor, are illustrated by the pressure curve **902** of FIG. **9** according to some embodiments. As is illustrated in region **904**, pressure in the fluid flow path varies or oscillates around a particular pressure setpoint **908** during normal operation of the system. Region **906** illustrates pressure pulses in the flow path in presence of a blockage distal to the pump. For example, the canister (or dressing) becomes full and/or a canister (or dressing) filter is occluded or blocked.

[0118] As is illustrated in region **906**, presence of a distal blockage causes a reduced volume to be seen upstream of the canister dressing), and the amplitude of the pressure pulses changes (e.g., increases). The frequency of a pressure signal also changes (e.g., slows down or decreases). Observed changes in one or more parameters of the pressure signal can be used to identify the type of distal blockage present, such as distinguish between canister (or dressing) full and other types of blockages in the fluid flow path.

Changes in the amplitude of the pressure signal can be measured using a variety of techniques, such as by measuring peak-to-trough change. In certain embodiments, the changes in the pressure pulse signal can be magnified or enhanced by varying the pump speed, varying the cadence of the pump, such as by adjusting PWM parameters, and the like. Such adjustments of pump operation are not required but can be performed over short time duration and the changes can be small such that the operation of the system remains relatively unaffected. In some systems, such as in canisterless systems where a dressing is configured to absorb fluid removed from the wound, detectuin of a dressing full condition or dressing filter (which may be hydrophobic) occluded condition can be an equivalent to detection of canister full condition.

[0119] Canister full condition can be detected by collecting a plurality of pressure sensor readings, each performed over a time duration (e.g., 2 seconds or any other suitable duration which may be vary between sample periods), are collected. A number of readings of the plurality of readings, such as 25 sample periods out of 30 or any other suitable number, are checked to determine if each indicates that the canister is full. This can performed by determining maximum and minimum pressure values captured over the time duration of a particular sample period. The values can be voltage values, current values, or any other suitable values that correspond to pressure. A difference between maximum and minimum values for a particular sample period corresponds to peak-to-through pressure (which is indicative of change in pressure pulse amplitude). If it is determined that the peak-to-through pressure for a particular sample period exceeds a threshold pressure value, then the particular sample period indicates that the canister is full.

[0120] The threshold value can be any suitable pressure threshold, such as a value selected or determined based on the negative pressure setpoint and the current level of activity of the pump, which as explained above can be determined using short tachometer average (or long tachometer average or any other suitable measure of flow rate). For example, threshold values listed in Table 1 can be used for comparing to peak-to-through pressure. These values correspond to a particular pump motor and particular pressure sensor.

TABLE 1

Threshold values for detecting canister full condition

Setpoint	Tachometer Frequency (in Hz)			Peak-to-Through Pressure (in mV)		
(in mmHg)	Low	Med	High	Low	Med	High
25	17	25	<25	50	110	215
40	23	35	<35	75	135	220
50	30	50	<50	90	175	225
60	30	55	<55	80	185	225
70	40	60	<60	115	185	235
80	40	60	<60	100	165	235
90	45	65	<65	110	170	235
100	45	65	<65	105	165	235
120	45	75	<75	105	175	235
140	50	85	<85	110	190	235
160	60	90	<90	110	165	220
180	75	100	<100	130	165	220
200	75	100	<100	125	155	210

[0121] Canister full determination can be performed on a sliding window basis. For example, a sliding window of 25 out of 30 sample periods can be analyzed and if 25 sample periods are determined to indicate that the canister is full, the pump concludes that the canister (or dressing) is full. Assuming that the sample period is 2 seconds, using a sliding window of 25 out of 30 sample periods effectively results in determining whether change in pressure pulse amplitude exceeds the threshold for 60 seconds. If short tachometer average becomes greater than the leak threshold or canister pressure becomes less than the low vacuum pressure threshold, canister full detection can be suspended or terminated. For example, if a sliding window of 25 out of 30 sample periods with each sample period having duration of 2 seconds in used, 60 second tinier for canister full detection can be reset when it has been determined that short tachometer average becomes greater than the leak threshold or canister pressure becomes less than the low vacuum pressure threshold. This can prevent generation of unnecessary and undesirable alarms.

[0122] Alternatively or additionally, canister full condition can be detected if a single sample period indicates that the canister is full. However, performing canister full detection using a plurality of sample periods can mitigate the effects of one or more transient conditions in the fluid flow path or one or more errant pressure readings. Alternatively or additionally, canister full detection can be performed by measuring the frequency of detected pressure signal and comparing the measured frequency to one or more suitable thresholds.

[0123] The pump assembly can perform leak check test, which may result in detection of a leak or low vacuum. If at any point during a time period that follows initiation of therapy, such as 45 seconds or any other suitable duration after therapy has been started, the short tachometer average rate falls below the leak threshold and process **800** has transitioned to block **808** (steady state), the leak check test has passed and suitable seal is deemed to have been achieved. That is, if pressure at the wound has reached the desired setpoint within the period of time and the flow rate (as indicated by the short tachometer average or any other suitable metric) does not satisfy or exceed the leak threshold, it is determined that the fluid flow path is suitably sealed and no significant leaks are present (e.g., the dressing has been properly placed and proper connections between pump assembly, canister, and dressing have been made). However, if the short tachometer average remains above the leak threshold at the end of the period of time, a leak is likely to be present, and the pump assembly indicates presence of a leak.

[0124] If at the end of the period of time, the process **800** remains in block **804** (or **806**) and has not transitioned to block **808**, the pump assembly determines whether the canister pressure satisfies or is above the low vacuum pressure threshold and the short tachometer average is below the leak threshold. If both of these conditions are met, it is determined that the fluid flow path is suitably sealed and no significant leaks are present. That is, even though the process **800** has not yet transitioned to block **808**, which indicates that the setpoint has been reached or substantially reached, the pump is properly working toward establishing the negative pressure setpoint at the wound as is evidenced by the flow rate remaining below the leak threshold and the vacuum level remaining above the low vacuum threshold.

Conversely, if the flow rate satisfies or exceeds the leak threshold, a leak is likely to be present, and the pump assembly indicates presence of a leak. If the low vacuum threshold is satisfied, the pump assembly indicates a low vacuum condition. Alternatively or additionally, long tachometer average or any other suitable measure of flow rate can be compared to the blockage threshold.

[0125] After leak check test has passed, a suitable seal can be deemed to have been achieved until therapy is paused. After therapy is restarted, leak check test can be performed.

[0126] In some embodiments, selecting or activating Y-connect feature (see FIG. **5**A) for treatment of multiple wounds, can alter or modify detection of one or more conditions, such as blockages, leaks, canister full condition, and the like. Activating the Y-connect feature can adjust one or more of various thresholds described above. For example, activating the Y-connect feature can decrease sensitivity of blockage detection by increasing the blockage threshold, which is used for blockage detection as explained above. The blockage threshold can be increased by a suitable amount, such as doubled.

[0127] In additional or alternative embodiments, multiple pressure sensors can be placed in the fluid flow path to facilitate detection of one or more of the above-described conditions. For example, in addition to or instead of the pressure sensor being placed in the pump inlet, a pressure sensor can be placed in the wound or under the dressing to directly determine the wound pressure. Measuring pressure at different locations in the fluid flow path, such as in the canister and at the wound, can facilitate detection of blockages, leaks, canister full condition, and the like. Multiple lumens can be utilized for connecting fluid flow path elements, such as pressure sensors, canister, pump assembly, dressing, and the like. Canister full condition can be detected by placing a sensor, such as capacitive sensor, in the canister. In some embodiments, in order to prevent occurrence of over vacuum, the maximum pressure supplied by the pump can be limited mechanically or electrically. For example, a pump drive signal, such as voltage or current supplied to the pump, can be limited not exceed a maximum flow rate threshold, such as 1.6 liters/min or any other suitable value. Additional details of flow rate detection and pump control are provided in U.S. Patent Publication No. 2013/0150813, which is incorporated by reference in its entirety.

[0128] In some embodiments, one or more flow sensors and/or flow meters can be used to directly measure the fluid flow. In some embodiments, the pump assembly can utilize one or more of the above-described techniques in parallel to control the pump and to detect various conditions. The pump assembly can be configured to suitably arbitrate between using parameters determined by different techniques. For example, the pump assembly can arbitrate between flow rates determined indirectly, such as based on the pump speed as measured by a tachometer, and directly, such as by using a flow meter. In certain embodiments, the pump assembly can indirectly determine the flow rate and resort to direct determination of the flow rate when needed, such as when indirectly determined flow rate is perceived to be inaccurate or unreliable.

Location Monitoring

[0129] The provider or manufacturer of TNP or reduced pressure therapy systems, such as pump assemblies, can desire to bill for the possession or usage of pump assemblies. The process of accounting for possession or use of the pump assemblies, however, can be difficult for the provider to manage since the provider may not have control over the administration and distribution of the pump assemblies. The provider may rely on other parties, such as hospital staff, to accurately track the possession or use of the pump assemblies. The other parties, unfortunately, may not at times accurately track the possession or use of the pump assemblies, so the provider may rely on erroneous or incomplete information from the other parties when accounting for and subsequently billing for the usage of pump assemblies. This situation can risk over or under billing for use of the pump assemblies. Accordingly, disclosed systems and methods can assist the provider of pump assemblies in accurately monitoring and tracking the pump assemblies to account for possession or use of the pump assemblies.

[0130] FIG. **10** illustrates a system **1000** for monitoring the locations of pump assemblies according to some embodiments. The system **1000** includes multiple pump assemblies **230** and a location monitoring hub **1010**. The multiple pump assemblies **230** can each be an instance of the pump assembly **230** described with respect to FIGS. **2**A-**2**C. The location monitoring hub **1010** can communicate with the multiple pump assemblies **230** to individually monitor the locations of the multiple pump assemblies **230**. Based on the determined locations of the multiple pump assemblies **230**, the location monitoring hub **1010** can automatically determine whether the multiple pump assemblies **230** may be within a proximity or a coverage area of the location monitoring hub **1010** and thereby control inventory management related to the multiple pump assemblies **230**, such as in connection with billing for the use of the multiple pump assemblies **230**. The location monitoring hub **1010** can utilize one or more of the following types of connections: cellular connectivity (for example, 2G, 3G, LTE, 4G, GPRS), WiFi™ connectivity, WLAN connectivity, Internet connectivity, Bluetooth™ connectivity, ZigBee connectivity, and the like.

[0131] Individual pump assemblies of the multiple pump assemblies **230** can repeatedly communicate with the location monitoring hub **1010** to repeatedly indicate to the location monitoring hub **1010** whether the multiple pump assemblies **230** may be present in the proximity of the location monitoring hub **1010**. The pump assembly A can, for instance, transmit a signal using a Bluetooth™ protocol communication to the location monitoring hub **1010** on a periodic, random, or scheduled basis (for instance, every 1, 5, or 20 seconds) and the like indicating that the pump assembly A may be in the proximity of the location monitoring hub **1010**. In one implementation, the pump assembly A can transmit the signal with a frequency based at least on a minimum billing period of the pump assembly A, such that the pump assembly A transmits the signal at least once per minimum billing period. For example, if the minimum billing period for the pump assembly A is 60 minutes, the pump assembly A can transmit the signal with a 30 minute periodicity. The location monitoring hub **1010** can, in turn, use the received signal from the pump assembly A to determine that the pump assembly A is present in the proximity of the location monitoring hub **1010**. The location monitoring hub **1010** can also use the received signal to determine the change in location over time of the pump assembly A relative to the location monitoring hub **1010**.

[0132] The location monitoring hub **1010** can determine the location of individual pump assemblies of the multiple pump assemblies **230** over time. In one example, the location monitoring hub **1010** can determine the location of an individual pump assembly, such as the pump assembly A, based at least on whether the location monitoring hub **1010** received a communication from the individual pump assembly recently (for example, within a threshold period of time). When a communication has not been received recently, the location monitoring hub **1010** can conclude or establish that the individual pump assembly is not within the proximity of the location monitoring hub **1010**. In such cases, the location monitoring hub **1010** may receive additional communications or information from the individual pump assembly indicating whether further communication may not be received for other reasons, such as if a low battery condition at the individual pump assembly may cause the individual pump assembly to shut down and cease communications. The additional communications or information can be used by the location monitoring hub **1010** to also indicate to send out an engineer to repair or replace the individual pump assembly. In another example, the location monitoring hub **1010** can determine the location of an individual pump assembly, such as the pump assembly B, based at least on the signal strength of a received communication from the individual pump assembly at the location monitoring hub **1010**. As the signal strength of the received communication diminishes, the location monitoring hub **1010** can determine that the individual pump assembly is farther from the location monitoring hub **1010**. In some embodiments, the location monitoring hub **1010** can include two or more antennas usable to receive communications from the multiple pump assemblies **230**, enabling the signal strength at the individual antennas to be used to more precisely determine (for example, triangulate) the locations of the multiple pump assemblies **230**.

[0133] The location monitoring hub **1010** can perform or facilitate inventory management functions for the multiple pump assemblies **230** based on the coverage area for the location monitoring hub **1010**. The coverage area can be a geographical area being monitored by the location monitoring hub **1010**, which can be used to make decisions about the status of the multiple pump assemblies **230**. For example, the coverage area of the location monitoring hub **1010** can correspond to the boundaries of a medical device storage facility, such as a storage closet in a hospital. When the location monitoring hub **1010** determines that an individual pump assembly is located within the coverage area, it may be concluded that the individual pump assembly is stored in the inventory storage area and not currently out for use by a patient. On the other hand, when the location monitoring hub **1010** determines that an individual pump assembly is outside the coverage area, it can be concluded that the individual pump assembly is currently out for use by a patient such that the provider of the individual pump assembly can begin billing for the use of the individual pump assembly.

[0134] The location monitoring hub **1010** can further facilitate management of inventory levels across different coverage areas. For example, if most or all of the pump assemblies in a particular coverage area may have been removed for use, the location monitoring hub **1010** can automatically indicate to send additional pump assemblies to the particular coverage area. Alternatively, if a number of pump assemblies in a certain coverage area may remain unused for an extended period of time, the location monitoring hub **1010** can automatically indicate to redistribute some of the pump assemblies in the certain coverage area to another coverage area.

[0135] As illustrated by FIG. **10**, the coverage area can be an area around the location monitoring hub **1010**, such as an area defined by any location within a certain distance from the location monitoring hub **1010**. For example, the coverage area can be circular or spherical with the location monitoring hub **1010** positioned at the center. In other embodiments, the coverage area can be a non-circular or asymmetrical area located around the location monitoring hub **1010** or some area monitored by the location monitoring hub **1010** but not located around or near the location monitoring hub **1010**. The coverage area can be in part defined by a two- or three-dimensional region, such as a floor space area, which has an area, for example, of around 100 m^2, 500 m^2, or 1000 m^2, and the like. This can provide for geo-fencing capabilities.

[0136] The size or position of the coverage area can be controlled or set by the location monitoring hub **1010** in some implementations. For example, a manager of the location monitoring hub **1010** can input a desired size of the coverage area, and the location monitoring hub **1010** can provide a coverage area having the desired size. In addition, the boundaries of the coverage area can depend on the range over which the location monitoring hub **1010** can successfully communicate with the multiple pump assemblies **230**. For instance, the range over which the location monitoring hub **1010** can communicate with an individual pump assembly may define the coverage area for the location monitoring hub **1010**. In such instances, the range can, for example, be (1) a range over which the location monitoring hub **1010** can receive communications from the multiple pump assemblies **230** without errors or (2) a range over which the location monitoring hub **1010** can receive communications having a signal strength that exceeds a signal strength threshold.

[0137] In one implementation, the location monitoring hub **1010** can monitor the locations of the multiple pump assemblies **230** relative to the coverage area over time and thus be used to indicate whether to bill for the multiple pump assemblies **230**. The location monitoring hub **1010** can be placed in a hospital storage area (for example, a storage closet or room) used for storing available-for-use pump assemblies, such as the pump assemblies C, E, and F. The coverage area, in turn, can span the hospital storage area so that the location monitoring hub **1010** determines whether the multiple pump assemblies **230** are within or outside the hospital storage area. When a pump assembly, such as the pump assembly A, or D, is removed from the hospital storage area, the location monitoring hub **1010** can infer that the pump assembly is being used for delivery of therapy to a patient such that the location monitoring hub **1010** can indicate to begin billing for the removed pump assembly. As is illustrated in FIG. **10**, this indication can be provided to a remote computer **1020** over any suitable network, such as the Internet. The remote computer **1020** can be a billing system. Once the removed pump assembly is returned to the hospital storage area, the location monitoring hub **1010** can conclude that the pump assembly is no longer in use and can indicate to stop billing for provision of negative therapy. This indication can also be provided to the remote computer **1020**. As a result, the location monitoring hub **1010** can

provide accurate indications of when to begin and stop billing for an individual pump assembly according at least to a comparison of when the individual pump assembly may have been removed from and returned to the hospital storage area. The indications can be provided using any suitable communication interface, such as by using iCloud technology. This can facilitate accurate tracking of usage and allow for accurate billing for delivery of negative pressure wound therapy, which in turn can facilitate accurate reimbursements from insurers.

[0138] In some embodiments, the system **1000** can further be used to provide one or more checks to determine whether to bill for an individual pump assembly. For example, if an individual pump assembly is removed from and returned to the coverage area within a relatively short time (for example, within a time of less than 10 minutes), the removal and return timings for the individual pump assembly may be used to decide not to provide an indication to bill for the removal of the individual pump assembly. In another example, the location monitoring hub **1010** can store an indication of whether a determined location for an individual pump assembly may be erroneous (for instance, a communicated message from the individual pump assembly may specify a location for the individual pump assembly different from the location of the individual pump assembly determined by the location monitoring hub **1010**), and thus may indicate not to bill for the individual pump assembly. In yet another example, an individual pump assembly can itself track timings or periods that the individual pump assembly may be outside the coverage area, and the timings or periods tracked by the individual pump assembly can be compared to the timings or time periods indicated by the location monitoring hub **1010** for consistency. Moreover, other timings or periods tracked by an individual pump assembly (for instance, total therapy deliver time, device on time, activity timings in an activity log, and the like) can be compared to the timings or time period indicated by the location monitoring hub **1010** to determine whether and when to bill for the individual pump assembly.

[0139] In some embodiments, the location monitoring hub **1010** may be omitted as the individual pump assemblies can be configured to communicate directly with the remote computer **1020** via the network. For instance, an individual pump assembly can provide its location directly to the remote computer **1020** using the communications processor **330**. The remote computer **1020** can then determine whether the individual pump assembly may be within a coverage area based at least on the provided location.

[0140] As used herein, an indication or to indicate can, in addition to having its ordinary meaning, respectively refer to a message or sending of a message via a communication channel (for instance, wired, wireless, electromagnetic, or magnetic mediums and the like) to point out information. The message can include data sufficient for a receiver of the message to determine the information pointed out in the message. In some implementations, the message or information pointed out in the message can cause the receiver or a device associated with the receiver to perform an action in accordance with the information pointed out in the message.

Other Variations

[0141] Any value of a threshold, limit, duration, etc. provided herein is not intended to be absolute and, thereby, can be approximate. In addition, any threshold, limit, duration, etc. provided herein can be fixed or varied either automatically or by a user. Furthermore, as is used herein relative terminology such as exceeds, greater than, less than, etc. in relation to a reference value is intended to also encompass being equal to the reference value. For example, exceeding a reference value that is positive can encompass being equal to or greater than the reference value. In addition, as is used herein relative terminology such as exceeds, greater than, less than, etc. in relation to a reference value is intended to also encompass an inverse of the disclosed relationship, such as below, less than, greater than, etc. in relations to the reference value.

[0142] Features, materials, characteristics, or groups described in conjunction with a particular aspect, embodiment, or example are to be understood to be applicable to any other aspect, embodiment or example described herein unless incompatible therewith. All of the features disclosed in this specification (including any accompanying claims, abstract and drawings), and/or all of the steps of any method or process so disclosed, may be combined in any combination, except combinations where at least some of such features and/or steps are mutually exclusive. The protection is not restricted to the details of any foregoing embodiments. The protection extends to any novel one, or any novel combination, of the features disclosed in this specification (including any accompanying claims, abstract and drawings), or to any novel one, or any novel combination, of the steps of any method or process so disclosed.

[0143] While certain embodiments have been described, these embodiments have been presented by way of example only, and are not intended to limit the scope of protection. Indeed, the novel methods and systems described herein may be embodied in a variety of other forms. Furthermore, various omissions, substitutions and changes in the form of the methods and systems described herein may be made. Those skilled in the art will appreciate that in some embodiments, the actual steps taken in the processes illustrated and/or disclosed may differ from those shown in the figures. Depending on the embodiment, certain of the steps described above may be removed, others may be added. For example, the actual steps and/or order of steps taken in the disclosed processes may differ from those shown in the figure. Depending on the embodiment, certain of the steps described above may be removed, others may be added. For instance, the various components illustrated in the figures may be implemented as software and/or firmware on a processor, controller, ASIC, FPGA, and/or dedicated hardware. Hardware components, such as processors, ASICs, FPGAs, and the like, can include logic circuitry. Furthermore, the features and attributes of the specific embodiments disclosed above may be combined in different ways to form additional embodiments, all of which fall within the scope of the present disclosure.

[0144] User interface screens illustrated and described herein can include additional and/or alternative components. These components can include menus, lists, buttons, text boxes, labels, radio buttons, scroll bars, sliders, checkboxes, combo boxes, status bars, dialog boxes, windows, and the like. User interface screens can include additional and/or alternative information. Components can be arranged, grouped, displayed in any suitable order.

[0145] Although the present disclosure includes certain embodiments, examples and applications, it will be understood by those skilled in the art that the present disclosure

extends beyond the specifically disclosed embodiments to other alternative embodiments and/or uses and obvious modifications and equivalents thereof, including embodiments which do not provide all of the features and advantages set forth herein. Accordingly, the scope of the present disclosure is not intended to be limited by the specific disclosures of preferred embodiments herein, and may be defined by claims as presented herein or as presented in the future.

1-37. (canceled)

38. An apparatus for applying negative pressure therapy to a wound, the apparatus comprising:

a housing comprising a source of negative pressure configured to be in fluidic communication with a wound dressing, the source of negative pressure being configured to aspirate fluid from a wound;

a controller configured to operate the source of negative pressure; and

a canister comprising:

a first wall and a second wall opposite the first wall, the first and second walls defining an interior volume configured to collect the fluid, and

a reinforcement element attached to the first wall and extending toward the second wall, the reinforcement element being dimensioned to prevent collapse of at least one of the first and second walls when negative pressure is applied to the interior volume.

39. The apparatus of claim **38**, wherein the reinforcement element comprises:

a base element attached to the first wall; and

a protruding element attached to the base element, the protruding element extending at about a perpendicular angle from the base element.

40. The apparatus of claim **39**, wherein the protruding element has a hexagonal shape.

41. The apparatus of claim **39**, wherein the protruding element comprises at least one hole.

42. The apparatus of claim **39**, wherein at least a part of the protruding element is configured to be in contact with the second wall when negative pressure is not applied the interior volume.

43. The apparatus of claim **39**, wherein at least a part of the protruding element is configured to be in contact with the second wall when negative pressure is applied to the interior volume.

44. The apparatus of claim **39**, wherein at least a part of the protruding element is configured to not be in contact with the second wall when negative pressure is not applied the interior volume.

45. The apparatus of claim **38**, wherein the first and second walls comprise a plastic material, and the interior volume has a volume of about 800 mL.

46. The apparatus of claim **38**, further comprising the wound dressing.

47. A canister for use in negative pressure wound therapy, the canister comprising:

a first wall and a second wall opposite the first wall, the first and second walls defining an interior volume configured to collect fluid aspirated from a wound; and

a reinforcement element attached to the first wall and extending toward the second wall, the reinforcement element dimensioned to prevent collapse of at least one of the first and second walls when negative pressure is applied to the interior volume.

48. The canister of claim **47**, wherein the reinforcement element comprises:

a base element attached to the first wall; and

a protruding element attached to the base element, the protruding element extending at about a perpendicular angle from the base element.

49. The canister of claim **48**, wherein the protruding element has a hexagonal shape.

50. The canister of claim **48**, wherein the protruding element comprises at least one hole.

51. The canister of claim **48**, wherein at least a part of the protruding element is configured to be in contact with the second wall when negative pressure is not applied the interior volume.

52. The canister of claim **48**, wherein at least a part of the protruding element is configured to be in contact with the second wall when negative pressure is applied to the interior volume.

53. The canister of claim **48**, wherein at least a part of the protruding element is configured to not be in contact with the second wall when negative pressure is not applied the interior volume.

54. The canister of claim **47**, wherein the first and second walls comprise a plastic material, and the interior volume has a volume of about 800 mL.

55. The canister of claim **47**, in combination with a housing comprising a source of negative pressure configured to be in fluidic communication with a wound dressing, the source of negative pressure being configured to aspirate the fluid from a wound.

* * * * *