June 3, 1924. 1,496,299

H. E. CLIFFORD

ELECTRIC FURNACE

Filed Oct. 4, 1921

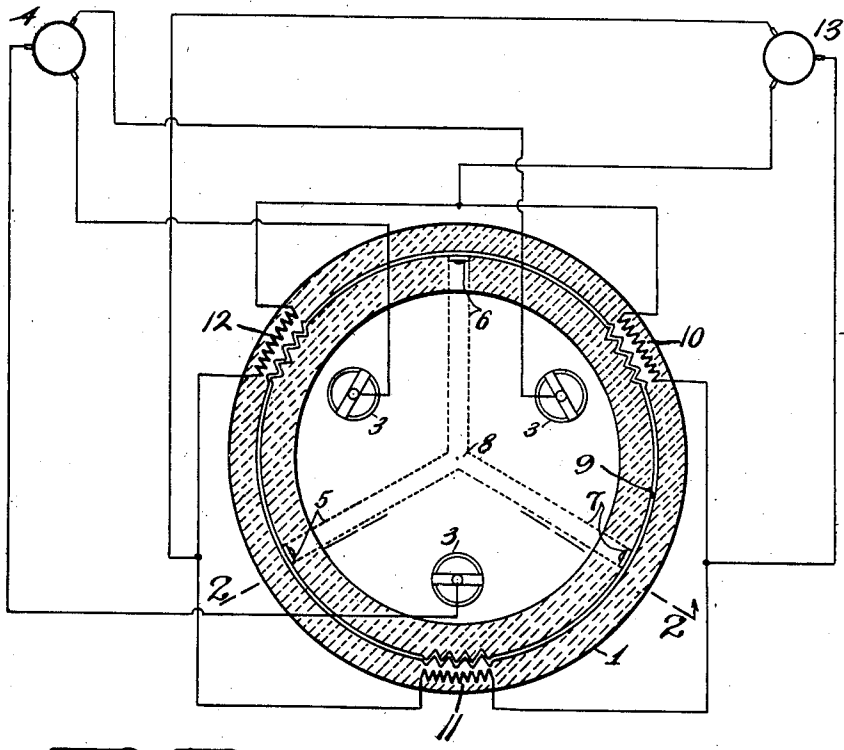

Fig. 1.

Fig. 2.

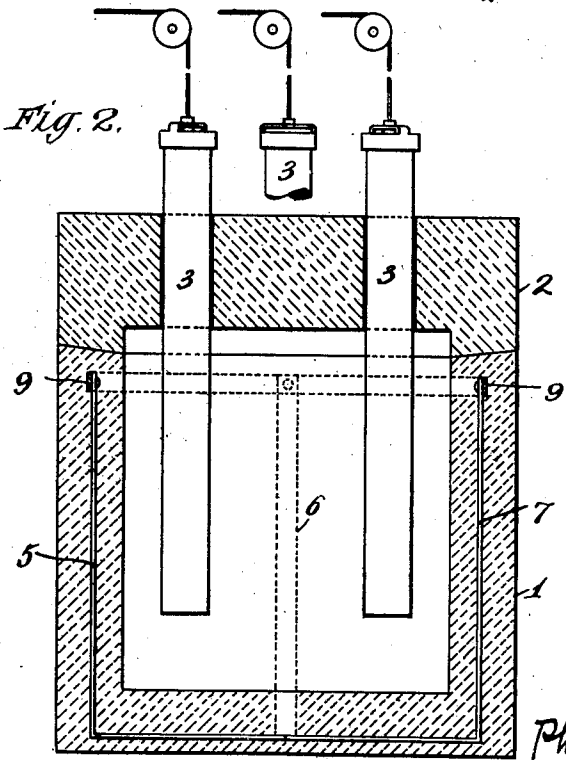

Fig. 3.

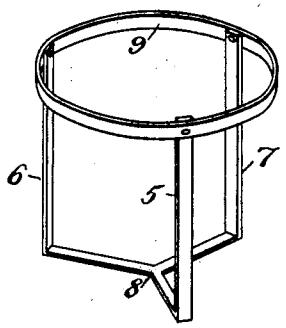

Inventor:
Harry E. Clifford
by his Attys:
Philipp, Lawyer, Rice & Kennedy

Patented June 3, 1924. 1,496,299

UNITED STATES PATENT OFFICE.

HARRY E. CLIFFORD, OF NEWTON, MASSACHUSETTS, ASSIGNOR TO SCOVILL MANUFACTURING COMPANY, OF WATERBURY, CONNECTICUT, A CORPORATION OF CONNECTICUT.

ELECTRIC FURNACE.

Application filed October 4, 1921. Serial No. 505,274.

To all whom it may concern:

Be it known that I, HARRY E. CLIFFORD, a citizen of the United States, residing at Newton, county of Middlesex, and State of Massachusetts, have invented certain new and useful Improvements in Electric Furnaces, fully described and represented in the following specification and the accompanying drawings, forming a part of the same.

This invention relates to improvements in electric furnaces.

In furnaces employing a polyphase current which is delivered directly to the charge, as by electrodes, when the electrodes are properly set, a rotating magnetic field is set up in the metal constituting the furnace charge. The lines of this rotating magnetic field concentrate within the space enclosed by the electrodes and the action of the field causes a circulation or stirring of the metal within the space surrounded by the electrodes. However, the lines of this field diverge in the space outside the electrodes, and the effect of the field in producing a circulation or stirring action in the space between the electrodes and the furnace wall is so slight as to be in general practically negligible.

Constructions have been employed in which conductors carrying a polyphase current are located in or near the furnace wall and opposite or nearly opposite the electrodes.

The flow of current in these conductors sets up a rotating magnetic field or fields additional to those referred to as being set up by the electrodes. The rotating field or fields set up by the current in the conductors coact with the fields set up by the current in the electrodes, and the coaction of these fields produces valuable results in furnace operation, such as improved mixing and additional heating effects.

The present invention has for its principal object to produce an improved furnace, generally of the type referred to, in which the rotating magnetic field which coacts with the rotating field of the heating current delivery means is produced by a flow of current having different characteristics from the heating current.

A further object of the invention is to produce a furnace having certain improved features of construction which are applicable generally to electric furnaces in which two coacting magnetic fields are employed.

With the objects referred to and others in view, the invention consists in certain constructions, improvements, and combinations of parts herein fully described and then specifically pointed out.

Referring to the accompanying drawing—

Figure 1 is a diagrammatic plan view of a furnace embodying the invention, the furnace wall being shown in section and the circuits being diagrammatically indicated;

Figure 2 is a sectional side elevation of the furnace shown in Figure 1, the plane of section being indicated by the line 2—2 in Fig. 1;

Figure 3 is a perspective view of the conductors and certain parts connected therewith.

The furnace which has been selected to illustrate the invention is of the usual type, the body of the furnace being marked 1 and the cover 2.

Furnaces embodying the invention will employ a polyphase heating current which will be so delivered to the charge as to set up a rotating magnetic field in the charge. In the furnace shown, the heating current is three-phase and it is delivered to the charge by electrodes 3 in circuit with a suitable current source, the generator being diagrammatically indicated at 4, the transformers not being shown. The electrodes 3, as illustrated, are set about 120° apart, and the flow of heating current through them into the charge causes a rotating magnetic field to be set up. The lines of this rotating magnetic field are concentrated within the space enclosed by the electrodes and the field causes a rotating and stirring movement of the metal in the space enclosed by the electrodes. The magnetic lines of this electrode field, however, diverge in the space between the electrodes and the furnace wall, and the motor effect of this field on the metal in this space is practically negligible.

As has been pointed out, furnace constructions have been employed in which conductors are located in or alongside the furnace wall, a polyphase current being sent through them. This current produces a rotating magnetic field the lines of which converge within the space enclosed by the

conductors. This rotating field coacts with the rotating field set up by the flow of current in the electrodes and produces valuable results as improved mixing and heating effects.

In accordance with the present invention, as in the construction just referred to, conductors are employed to set up an additional rotating magnetic field, but these conductors are in circuit with a source of polyphase current which has different characteristics from those of the heating current. For instance, the frequency of the current thus supplied to the conductors may differ from that of the main heating current; it may differ in wave shape, in voltage, in phase, in amperage, or it may differ in combinations of these characteristics.

In the particular construction illustrated, conductors 5, 6, 7 are employed. In what are regarded as the best constructions, these conductors, as in the prior construction referred to, are insulated from the charge and are located in the furnace wall. Further, such conductors are carried down underneath the bottom of the furnace, and meet at a common point, as 8, beneath the furnace. By thus causing the conductors to meet at a common point, weakening of the furnace bottom such as might result from leading the conductors through it, is avoided. This feature of construction is of value not only in furnaces in which the additional rotating magnetic field is set up by a current having characteristics different from the main heating current, but is also of utility in the prior furnaces referred to wherein the current which assists the rotating magnetic field has the same characteristics as the main heating current. Where, as in the construction shown, the furnace has a detachable cover, the upper ends of the conductors 5, 6, 7 may well terminate below the joint between the cover and the main body of the furnace. This permits removal of the cover without disturbing the conductors and their circuit connections.

In the furnace illustrated, a three-phase heating current is employed and the current in the conductors is also a three-phase current. The conductors 5, 6, 7 are in circuit with the polyphase generator 13 which supplies a current having different characteristics from the heating current.

Current transformers 10, 11 and 12 are provided, one for each current phase. These transformers may be and should be located close to the leading-in terminals of the conductors, so that the secondary leads from the transformers to the conductors may be made short. The location of the current transformers close to the leading-in terminals of the conductors has advantages in the way of preventing losses. High voltage current can be brought up to the transformers on comparatively light conductors which can be arranged to secure minimum magnetic and electric losses, and the short leads from the transformers to the conductors also cut down such losses materially.

In what are regarded as the best constructions, the secondary leads are formed by a metal annulus 9 which connects the upper ends of the conductors, the transformers being arranged around this metal annulus, and the annulus and conductors being arranged in the furnace wall. This forms a compact construction which is particularly efficient in the way of preventing losses.

Further, while this construction is of special value in furnaces in which the additional rotating magnetic field is set up by a current flow having characteristics which are different from those of the main heating current, it may also be used to advantage in furnaces in which the current which sets up the additional rotating magnetic field has the same characteristics as those of the main heating current.

A furnace construction such as has been described, in which the additional rotating magnetic field referred to is set up by a current which has different characteristics from that of the main heating current, enables many useful results to be obtained. For instance, if the current supplied to the conductors be of a lower voltage than that of the main heating current, the problems connected with the insulation of the conductors are simplified. When the current in the conductors has the same voltage as the heating current in the electrodes, there is considerable danger of short circuiting, and great care has to be taken with the insulation, particularly in view of the high temperatures to which the furnace walls are subjected. With a current in the conductors of lower voltage than that of the current in the electrodes, this danger of short circuiting is practically eliminated and the insulating problems are simpler. Further, while the heating current sent through the electrodes into the charge necessarily has fixed characteristics because it must effect the heating of the metal, the current sent through the conductors may be selected with respect to the particular additional results it is desired to produce. Thus, as has been indicated, if it be desired to simplify the problems connected with insulation, a current of lower voltage than the voltage of the main current will be employed, and, if additional heating or mixing results are desired, the current in the conductors will be selected with particular reference to the production of these effects, or, if a combination of the various results are desired, the additional current will be selected accordingly.

Changes and variations may be made in

the construction herein shown for carrying the invention into effect, and it is to be understood that the invention is not confined to the particular construction herein shown and described.

What is claimed is:

1. In an electric furnace, the combination with means for so delivering a polyphase heating current to the charge as to set up a rotating magnetic field therein, of conductors, means for supplying to said conductors a polyphase current having different characteristics from the heating current, the current flow in the conductors also setting up a rotating magnetic field, said conductors being located in such proximity to the charge and in such relation to the heating-current delivering means that the conductor field coacts with the heating-current field to increase the stirring effect.

2. In an electric furnace, the combination with electrodes for delivering a polyphase heating current to the charge, the electrodes being so arranged that the flow of current therein sets up a rotating magnetic field in the charge, of conductors, transformers, one for each current phase, for delivering polyphase current to the conductors, the conductors being located in such proximity to the charge and in such relation to the electrodes that the conductor-field coacts with the heating-current field to increase the stirring effect.

3. In an electric furnace, the combination with electrodes for delivering polyphase heating current to the charge, the electrodes being so arranged that the flow of current therein sets up a rotating magnetic field in the charge, of conductors, transformers, one for each current phase, for delivering polyphase current to said conductors, said transformers being arranged close to the conductor terminals, the conductors being so located in such proximity to the charge and in such relation to the electrodes that the conductor-field coacts with the heating-current field to increase the stirring effect.

4. In an electric furnace, the combination with electrodes for delivering polyphase heating current to the charge, the electrodes being so arranged that the flow of current therein sets up a rotating magnetic field in the charge, of conductors, transformers, one for each current phase, for delivering polyphase current to said conductors, said transformers being arranged close to the conductor terminals and in the furnace wall, the conductors being so located in such proximity to the charge and in such relation to the electrodes that the conductor-field coacts with the heating-current field to increase the stirring effect.

5. In an electric furnace, the combination with electrodes for delivering polyphase heating current to the charge, the electrodes being so arranged that the flow of current therein sets up a rotating magnetic field in the charge, of conductors located in the furnace wall, said conductors being carried down alongside the charge and underneath it and meeting at a common point, and means for supplying a polyphase current to said conductors, whereby the current flow in the conductors sets up a rotating magnetic field which coacts with the rotating magnetic field established by the current in the electrodes.

6. In an electric furnace, the combination with electrodes for delivering polyphase heating current to the charge, the electrodes being so arranged that the flow of current sets up a rotating magnetic field in the charge, of conductors located in the furnace wall, said conductors being carried down alongside and underneath the charge and meeting at a common point, means for supplying a polyphase current to said conductors, and transformers, one for each current phase, located in the furnace wall and close to the leading-in terminals of the conductors, whereby the current flow in the conductors sets up a rotating magnetic field which coacts with the rotating magnetic field established by the current in the electrodes.

7. In an electric furnace, the combination with electrodes for delivering polyphase heating current to the charge, the electrodes being so arranged that the flow of current therein sets up a rotating magnetic field in the charge, of conductors located in the furnace wall, said conductors being carried down alongside the charge and underneath it and meeting at a common point, and means for supplying polyphase current to said conductors having different characteristics from the heating-current, whereby the current flow in the conductors sets up a rotating magnetic field which coacts with the rotating magnetic field established by the current in the electrodes.

8. In an electric furnace, the combination with electrodes for delivering polyphase heating current to the charge, the electrodes being so arranged that the flow of current sets up a rotating magnetic field in the charge, of conductors located in the furnace wall, said conductors being carried down alongside and underneath the charge and meeting at a common point, means for supplying polyphase current to said conductors having different characteristics from the heating-current, and transformers, one for each current phase, located in the furnace wall and close to the leading-in terminals of the conductors, whereby the current flow in the conductors sets up a rotating magnetic field which coacts with the rotating magnetic field established by the current in the electrodes.

9. In an electric furnace, the combination with means for so delivering polyphase heating current directly to the charge as to set up a rotating magnetic field in the charge, of conductors insulated from the charge and in circuit with a source of polyphase current, the conductors being so arranged that the flow of current therein sets up an additional rotating magnetic field in the charge which coacts with the rotating field set up by the heating-current.

10. In an electric furnace, the combination with means for so delivering polyphase heating current directly to the charge as to set up a rotating magnetic field in the charge, of conductors arranged around the heating-current delivering means, a source of polyphase current of different characteristics from that of the heating-current, connections including a current transformer, one for each current phase, between said source and the conductors, the conductors being so located as to set up a rotating magnetic field or fields in the charge which coact with the rotating field set up by the heating current.

11. In an electric furnace, the combination with means for so delivering polyphase heating current directly to the charge as to set up a rotating magnetic field in the charge, of conductors arranged around the heating current delivering means and insulated from the charge, a source of polyphase current of lower voltage than the heating current, and connections between said source and the conductors including a transformer for each phase of the current, the conductors being so located as to set up an additional rotating magnetic field or fields in the charge which coact with the rotating field set up by the heating-current.

12. In an electric furnace having a detachable cover, the combination with electrodes for so delivering polyphase heating current directly to the charge as to set up a rotating magnetic field in the charge, of conductors arranged around the electrodes and having their upper ends below the joint between the cover and the furnace, means for delivering polyphase current to said conductors, said means including a transformer for each conductor, the conductors being so arranged that the current flow therein sets up a rotating magnetic field or fields in the charge which coact with the rotating field set up by the heating-current.

13. In an electric furnace having a detachable cover, the combination with electrodes for so delivering polyphase heating current directly to the charge as to set up a rotating magnetic field in the charge, of conductors arranged around the electrodes and having their upper ends below the joint between the cover and the furnace, means for delivering polyphase current to said conductors, said current having different characteristics from the main heating current, said current delivering means for the conductors including a transformer for each conductor, the conductors being so arranged that the current flow therein sets up a rotating magnetic field or fields in the charge which coact with the rotating field set up by the heating current.

14. In an electric furnace having a detachable cover, the combination with electrodes for so delivering polyphase heating current directly to the charge as to set up a rotating magnetic field in the charge, of conductors arranged around the electrodes, said conductors having their lower ends beneath the furnace and their upper ends terminating below the joint of the cover and the furnace, and means including a transformer for each conductor for delivering polyphase current to the conductors, the transformers being located in the furnace wall and close to the leading-in terminals of the conductors, and the conductors being so arranged that the current flow therein sets up a rotating magnetic field or fields in the charge which coact with the rotating field set up by the heating-current.

15. In an electric furnace having a detachable cover, the combination with electrodes for so delivering polyphase heating current directly to the charge as to set up a rotating magnetic field in the charge, of conductors arranged around the electrodes, said conductors having their lower ends beneath the furnace and their upper ends terminating below the joint of the cover and the furnace, and means including a transformer for each conductor for delivering to the conductors polyphase current of different characteristics from the main heating-current, the transformers being located in the furnace walls and close to the leading-in terminals of the conductors, and the conductors being so located that the current flow therein sets up a rotating magnetic field or fields in the charge which coact with the rotating field set up by the heating-current.

In testimony whereof, I have hereunto set my hand.

HARRY E. CLIFFORD.