United States Patent [19]

Brefka

[11] **Patent Number: Des. 284,697**

[45] **Date of Patent: ** Jul. 15, 1986**

[54] **INFANT APNEA DETECTOR**

[75] Inventor: **Paul E. Brefka,** South Borough, Mass.

[73] Assignee: **Briox Technologies, Inc.,** Worcester, Mass.

[**] Term: **14 Years**

[21] Appl. No.: **541,134**

[22] Filed: **Oct. 12, 1983**

[52] **U.S. Cl.** **D24/17;** D24/8

[58] **Field of Search** D24/8, 17, 21, 99; D9/426; D10/46, 57, 75, 85, 100; D13/40-41; 128/204.23, 205.23, 716-720, 725, 731-736, 671, 905, 701; 206/305-306

[56] **References Cited**

U.S. PATENT DOCUMENTS

D. 249,063	8/1978	James	128/716
D. 270,469	9/1983	Horne	D24/17
D. 273,118	3/1984	Hirata et al.	D18/7
D. 273,329	4/1984	Walus	D24/8
3,052,233	9/1962	Veling	128/701
4,066,072	1/1978	Cummins	128/716
4,165,554	8/1979	Faget	206/305
4,350,166	9/1982	Mobarry	128/719
4,446,869	5/1984	Knodle	128/716

Primary Examiner—A. Hugo Word
Assistant Examiner—Brian N. Vinson
Attorney, Agent, or Firm—Lerner, David, Littenberg, Krumholz & Mentlik

[57] **CLAIM**

The ornamental design for an infant apnea detector, as shown.

DESCRIPTION

FIG. **1** is a perspective view of an infant apnea detector showing my new design;
FIG. **2** is a front elevation thereof;
FIG. **3** is a rear elevation thereof;
FIG. **4** is a right side elevation thereof;
FIG. **5** is a left side elevation thereof;
FIG. **6** is a top plan view thereof; and
FIG. **7** is a bottom plan view thereof.

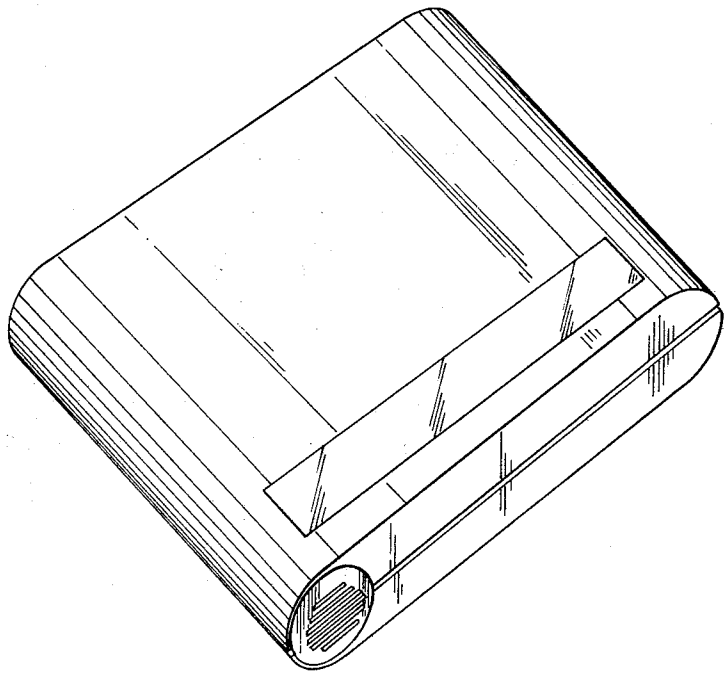

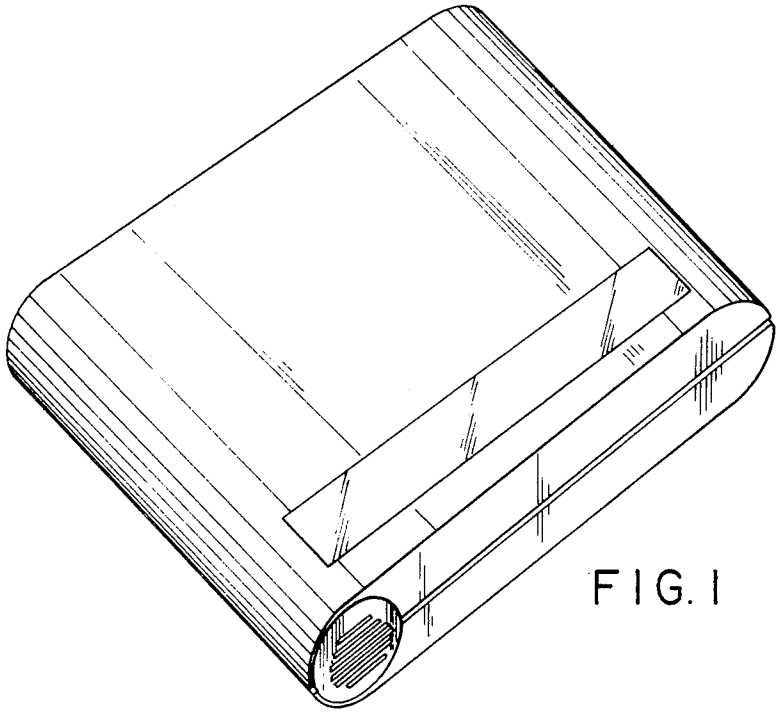

FIG. 1

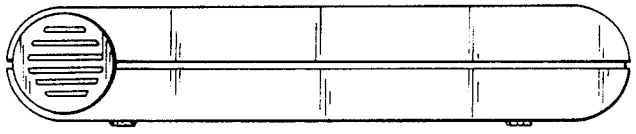

FIG. 2

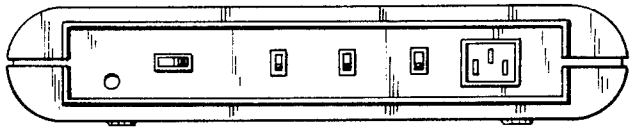

FIG. 3

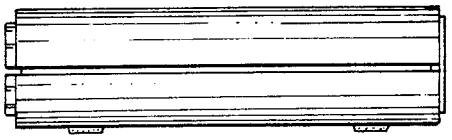

FIG. 4

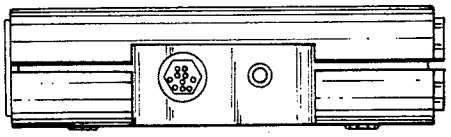

FIG. 5

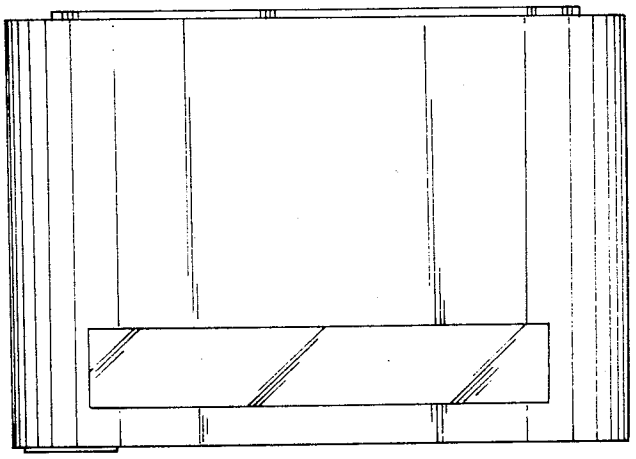

FIG. 6

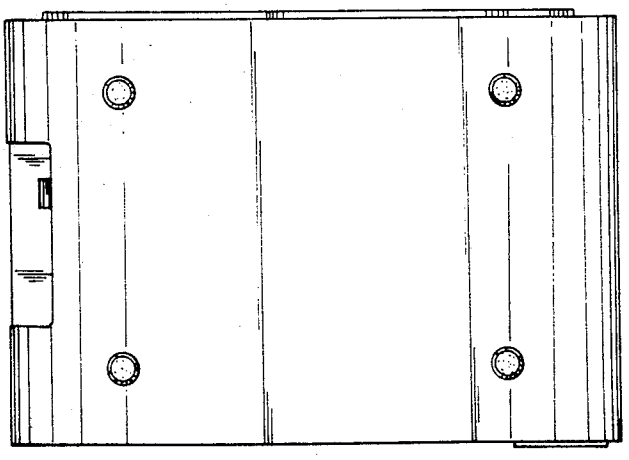

FIG. 7