Feb. 10, 1931. A. M. WEBB 1,791,777

EXERCISING AND VIBRATING DEVICE

Filed June 30, 1928

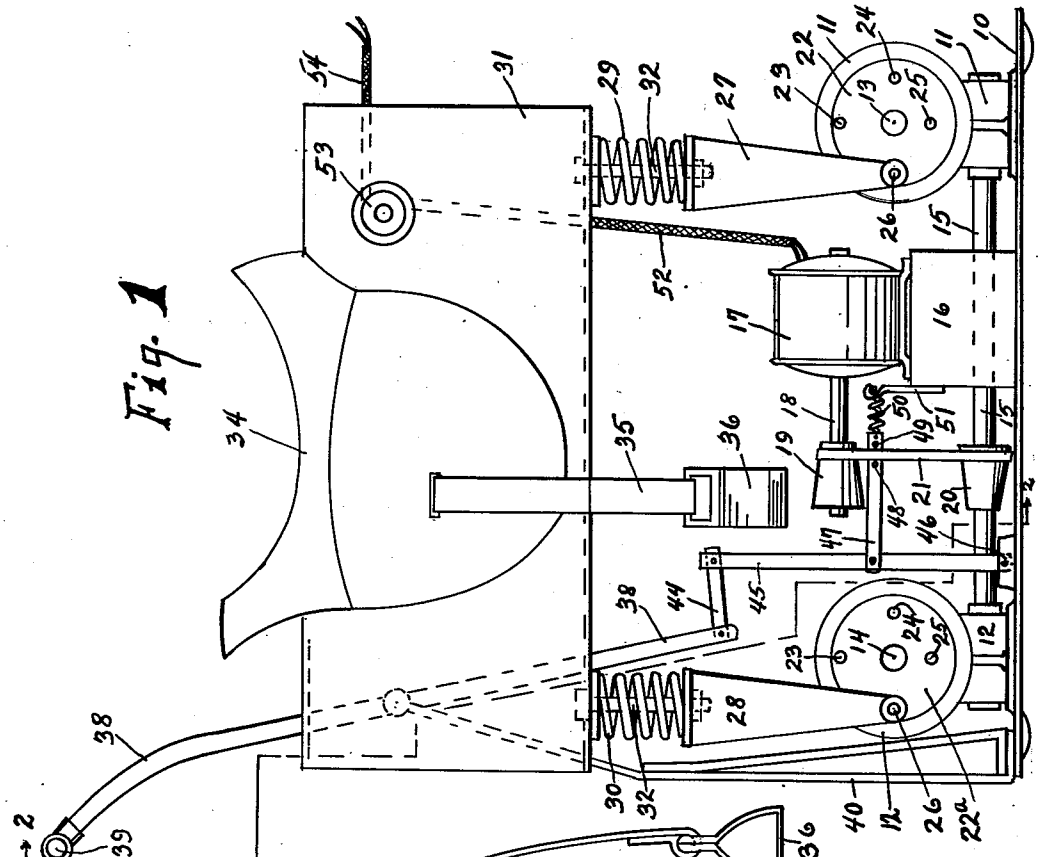

Fig. 1

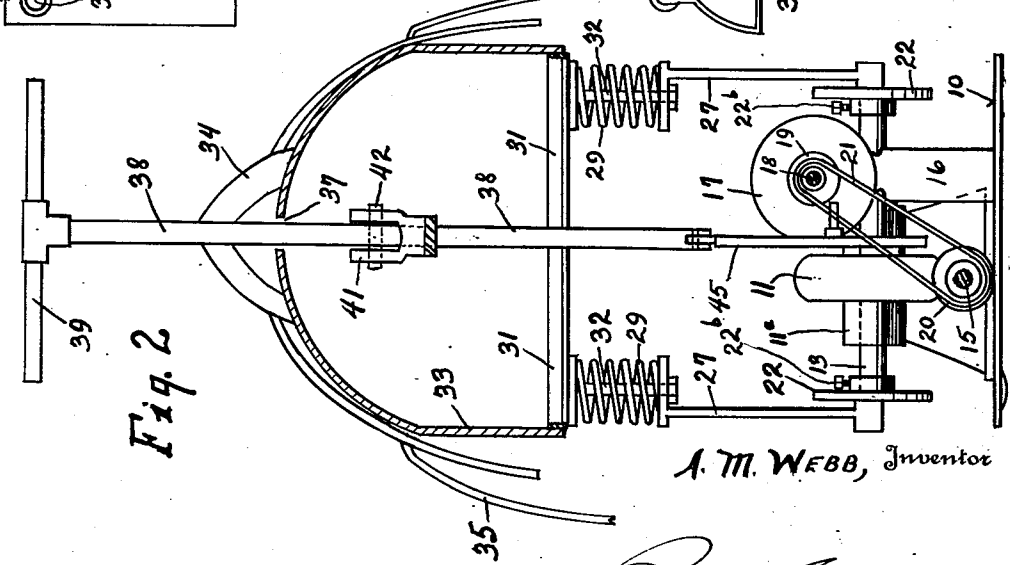

Fig. 2

A. M. WEBB, Inventor

By Paul B. Eaton

Attorney

Patented Feb. 10, 1931 1,791,777

UNITED STATES PATENT OFFICE

ADOLPHUS M. WEBB, OF CHARLOTTE, NORTH CAROLINA, ASSIGNOR OF ONE-FOURTH TO W. G. JARRELL MACHINE COMPANY, OF CHARLOTTE, NORTH CAROLINA

EXERCISING AND VIBRATING DEVICE

Application filed June 30, 1928. Serial No. 289,430.

My invention relates to an exercising device which is so designed as to simulate the motions of a horse while traveling the various gaits and speeds so as to impart to the rider exercise approaching that received from horseback riding.

It is an object of my invention to provide an exercising device of the type known as a mechanical horse, which can be so adjusted as to imitate various gaits of a horse, such as trotting, pacing, single-foot, galloping, etc.

Another object of my invention is to provide an exercising device having a plurality of transversely disposed shafts therein, together with means for eccentrically mounting a plurality of upstanding members on said shafts, which are adapted to support in a resilient manner a body portion provided with a saddle, the mechanism being adapted to be adjusted to impart various forms of exercise to the rider.

Some of the objects of my invention having been stated, other objects will appear as the description proceeds when taken in connection with the accompanying drawings, showing a preferred embodiment of my invention, in which—

Figure 1 is a side elevation of my device;

Figure 2 is a cross-sectional view taken along the line 2—2 in Figure 1.

Referring more particularly to the drawings, the numeral 10 indicates the base portion of my machine which is adapted to rest on any suitable support, such as a floor and mounted on this base portion are the worm reduction gears 11 and 12, which have the transversely disposed shafts 13 and 14 secured therein and adapted to be rotated thereby, said reduction gears 11 and 12 being connected to each other by means of the shaft 15 and also mounted on the support 10 is the support 16 having an electric motor 17 which has the extended shaft 18 on which there is the cone pulley 19 and on the shaft 15 there is another cone pulley 20 and a belt 21 is adapted to be placed on these two cone pulleys by means of which rotary motion is imparted to the shaft 15, which in turn imparts rotary motion to the shafts 13 and 14 through the reduction worm gears 11 and 12.

Adjustably mounted on the ends of the shafts 13 and 14 by means of the set screws 22*b* are the disks 22 and 22—*a*, there being four of these disks or one disk on each end of each of the shafts. These disks have a plurality of holes as indicated by the reference numerals 23, 24, 25 and 26, and in these holes are adapted to be loosely mounted the lower ends of the upwardly projecting members 27 and 28, and on the upper ends of the members 27 and 28, there being two of the members 27 at the rear of the horse and two members 28 at the front of the horse, are secured by welding or any other suitable manner the compression springs 29 and 30, which compression springs at their upper ends are secured to a frame work 31 and bolts 32 project downwardly from the frame work through the springs and through the upper ends of the members 27 and 28. Secured on the frame work 31 is the member 33, which has a curved upper surface which is adapted to support a saddle 34, which saddle has the downwardly projecting strap portions 35 adapted to support the stirrups 36 on the lower end thereof, and the forward portion of the member 33 has the slot 37 therein in which the handle member 38 is adapted to slide, said handle member having the handle bar 39.

Projecting upwardly from the base portion 10 is the support 40 which has its upper end forked as at 41 and in this forked portion the bolt 42 is mounted which is adapted to penetrate the member 38 and serve as a pivotal point therefor. This member 38 extends downwardly and is pivotally connected to toggle joint 44, which in turn is pivotally connected to the lever 45 which is pivotally connected to the base portion 10 as at 46, and pivotally secured to the member 45 intermediate its ends is the member 47, which has the pins 48 and 49 projecting therefrom which fit on both sides of the belt 21 and to the rear end of the member 47 is secured the tension spring 50 which has its other end secured to the bracket 51 which is mounted on the motor support 16. The purpose of the handle bar and the mechanism just described is to regulate the speed at

which the shafts 13 and 14 are driven, and in the position shown in Figure 1 the slowest motion will be obtained and the parts will be held in this position, and when it is desired to increase the speed the handle bar 39 can be pulled backwardly by the rider which will move the belt forward on the cone pulleys 19 and 20 and thus increase the speed of the revolving shafts 13 and 14. If desired, I can have a variable speed motor and use the handle bar for adjusting the speed of the motor to accomplish the same regulation in speed.

The worm reduction gears 11 and 12 have the broad bearing surfaces 11—*a* which serves as supports for the shafts 13 and 14 and render other bearing portions for the said shafts unnecessary.

The wires 52 load from the motor through a switch 53 located to the rear of the saddle and outwardly to a source of electric power as indicated at 54, so that the operator can operate or start the machines while seated in the saddle 34.

It is evident that by adjustment of the members 27 and 28 in various sets of the holes 23 to 26, that various forms of motion may be imparted to the rider seated in the saddle 34. With all four of the members 27 and 28 adjusted in the position shown a plain up and down and backward and forward movement will be produced, but it will be noted that the holes 23 have the greatest radius, the holes 26 the next greatest radius, the holes 24 the third greatest radius, and the holes 25 the smallest radius, so that in case it should be desired to adjust one of the members 27 in the hole 26 and another of the members 27 in the hole 23, for instance with a similar adjustment of the members 28 it is seen that a compound rocking up and down movement and backward and forward movement and sidewise movement will be produced. In fact by various adjustments between the wheels 22 and 22—*a*, and the members 27 and 28 almost any desired combination of motions and movements may be obtained.

Attention is again directed to the disks 22 and 22—*a*, being adjustably mounted on their respective shafts, and it is seen that by means of adjusting these disks and also the members 27 and 28 in the various holes 23 to 26 that the number of various movements is unlimited.

The various springs 29 and 30 have a very important function in that they cause a resilient motion to be imparted to the rider which closely simulates the motions received by a rider while riding a horse.

In the drawings and specification I have set forth a preferred embodiment of my invention, and although specific terms are employed, they are used in a generic and descriptive sense only, and not for purposes of limitation, the scope of my invention being set forth in the appended claims.

I claim:

1. In an exercising device, a base portion, two transversely disposed shafts mounted in said base portion, a longitudinally disposed shaft mounted in said base portion and having a driving connection between the said longitudinally disposed shaft and the transversely disposed shafts, a cone pulley on the longitudinally disposed shaft, an electric motor mounted in said base portion and having a cone pulley thereon mounted in a reverse direction to the first named cone pulley, a belt extending between the said cone pulleys, a disk mounted on each end of each of the transversely disposed shafts, upwardly projecting members mounted on the said disks in a pivotal manner, a plurality of holes in each of said disks in which the upwardly projecting members are adapted to be mounted, resilient means on the upward end of each of the upwardly projecting members, a saddle structure mounted on the upward end of said upwardly projecting members and above the said resilient means, a pivoted handle member in said saddle structure, said pivoted handle member extending downwardly in the base portion and having a pivoted connection with the said belt to regulate the position of said belt with relation to the cone pulleys, to regulate the speed of the transversely disposed shafts with relation to the speed of the motor.

2. An exercising device comprising a base portion, two transversely disposed shafts rotatably mounted on said base portion, a longitudinally disposed shaft, worm and gear connections between said longitudinally disposed shaft and said transversely disposed shafts, variable driving means for said shafts, a disk near each end of said transversely disposed shafts, each of said disks having a plurality of holes therein located at varying distances from the center of the disk, a standard for each disk, means pivotally securing the lower end of each standard in one of said holes in said disks, a saddle member resiliently mounted on the upper end of said standards, and means within reach of an occupant of said saddle for controlling said variable driving means.

In testimony whereof I affix my signature.

ADOLPHUS M. WEBB.