Innovation, Sciences et Développement économique Canada
Office de la Propriété Intellectuelle du Canada

Innovation, Science and Economic Development Canada
Canadian Intellectual Property Office

CA 2913134 C 2024/02/06

(11)(21) 2 913 134

(12) BREVET CANADIEN
CANADIAN PATENT

(13) C

(86) **Date de dépôt PCT/PCT Filing Date:** 2014/05/13
(87) **Date publication PCT/PCT Publication Date:** 2014/11/27
(45) **Date de délivrance/Issue Date:** 2024/02/06
(85) **Entrée phase nationale/National Entry:** 2015/11/20
(86) **N° demande PCT/PCT Application No.:** US 2014/037841
(87) **N° publication PCT/PCT Publication No.:** 2014/189718
(30) **Priorité/Priority:** 2013/05/20 (US61/825,133)

(51) **Cl.Int./Int.Cl.** ***H01R 13/622*** (2006.01),
H01R 24/40 (2011.01), *H01R 9/05* (2006.01)

(72) **Inventeurs/Inventors:**
BURRIS, DONALD ANDREW, US;
MILLER, THOMAS DEWEY, US

(73) **Propriétaire/Owner:**
CORNING OPTICAL COMMUNICATIONS RF LLC, US

(74) **Agent:** GOWLING WLG (CANADA) LLP

(54) **Titre : CONNECTEUR POUR CABLE COAXIAL A PROTECTION RFI INTEGREE**
(54) **Title: COAXIAL CABLE CONNECTOR WITH INTEGRAL RFI PROTECTION**

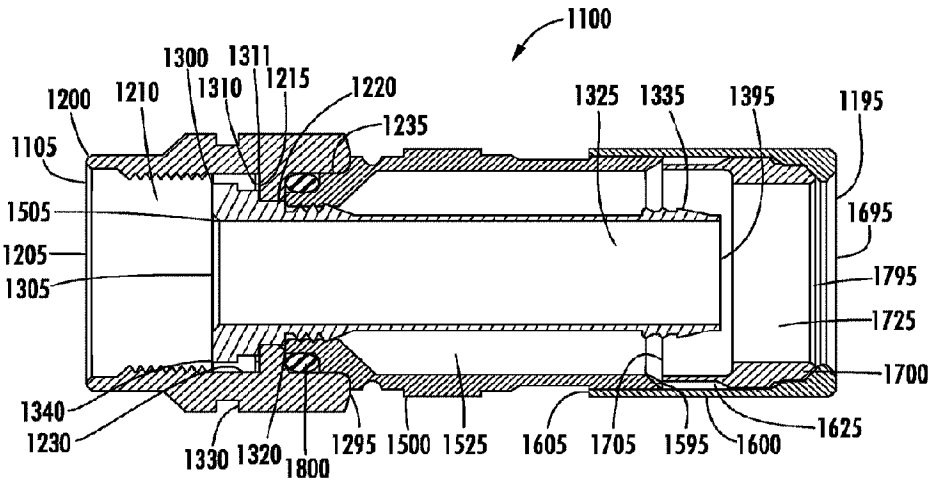

(57) **Abrégé/Abstract:**
A coaxial cable connector for coupling an end of a coaxial cable to a terminal is disclosed. The connector has a coupler, a body assembled with the coupler, and a post assembled with the coupler and the body. The coupler is adapted to couple the connector and, thereby, the coaxial cable to the terminal. The post is adapted to receive an end of a coaxial cable and has a contacting portion of monolithic construction with the post. The contacting portion extends in a generally perpendicular orientation with respect to a longitudinal axis of the connector, and is configured to maintain the generally perpendicular orientation and facilitate and electrical continuity between the post and the coupler to provide RF shielding such that the integrity of an electrical signal transmitted through coaxial cable connector is maintained regardless of the tightness of the coupling of the connector to the terminal.

(12) INTERNATIONAL APPLICATION PUBLISHED UNDER THE PATENT COOPERATION TREATY (PCT)

(19) World Intellectual Property Organization
International Bureau

(43) International Publication Date
27 November 2014 (27.11.2014)

WIPO | PCT

(10) International Publication Number
WO 2014/189718 A1

(51) International Patent Classification:
H01R 13/622 (2006.01) *H01R 9/05* (2006.01)
H01R 24/40 (2011.01)

(21) International Application Number:
PCT/US2014/037841

(22) International Filing Date:
13 May 2014 (13.05.2014)

(25) Filing Language: English

(26) Publication Language: English

(30) Priority Data:
61/825,133 20 May 2013 (20.05.2013) US

(71) Applicant: **CORNING OPTICAL COMMUNICATIONS RF LLC** [US/US]; 5310 W. Camelback Rd., Glendale, Arizona 85301 (US).

(72) Inventors: **BURRIS, Donald, Andrew**; 6826 West Sierra Street, Peoria, Arizona 85345 (US). **MILLER, Thomas, Dewey**; 31689 N. 128th Drive, Peoria, Arizona 85383 (US).

(74) Agent: **VYNALEK, John, H.**; Corning Optical Communications LLC, Intellectual Property Department SP-TI-03-1, Corning, New York 14831 (US).

(81) Designated States *(unless otherwise indicated, for every kind of national protection available)*: AE, AG, AL, AM, AO, AT, AU, AZ, BA, BB, BG, BH, BN, BR, BW, BY, BZ, CA, CH, CL, CN, CO, CR, CU, CZ, DE, DK, DM, DO, DZ, EC, EE, EG, ES, FI, GB, GD, GE, GH, GM, GT, HN, HR, HU, ID, IL, IN, IR, IS, JP, KE, KG, KN, KP, KR, KZ, LA, LC, LK, LR, LS, LT, LU, LY, MA, MD, ME, MG, MK, MN, MW, MX, MY, MZ, NA, NG, NI, NO, NZ, OM, PA, PE, PG, PH, PL, PT, QA, RO, RS, RU, RW, SA, SC, SD, SE, SG, SK, SL, SM, ST, SV, SY, TH, TJ, TM, TN, TR, TT, TZ, UA, UG, US, UZ, VC, VN, ZA, ZM, ZW.

(84) Designated States *(unless otherwise indicated, for every kind of regional protection available)*: ARIPO (BW, GH, GM, KE, LR, LS, MW, MZ, NA, RW, SD, SL, SZ, TZ, UG, ZM, ZW), Eurasian (AM, AZ, BY, KG, KZ, RU, TJ, TM), European (AL, AT, BE, BG, CH, CY, CZ, DE, DK, EE, ES, FI, FR, GB, GR, HR, HU, IE, IS, IT, LT, LU, LV, MC, MK, MT, NL, NO, PL, PT, RO, RS, SE, SI, SK, SM, TR), OAPI (BF, BJ, CF, CG, CI, CM, GA, GN, GQ, GW, KM, ML, MR, NE, SN, TD, TG).

Published:
— *with international search report (Art. 21(3))*

(54) **Title**: COAXIAL CABLE CONNECTOR WITH INTEGRAL RFI PROTECTION

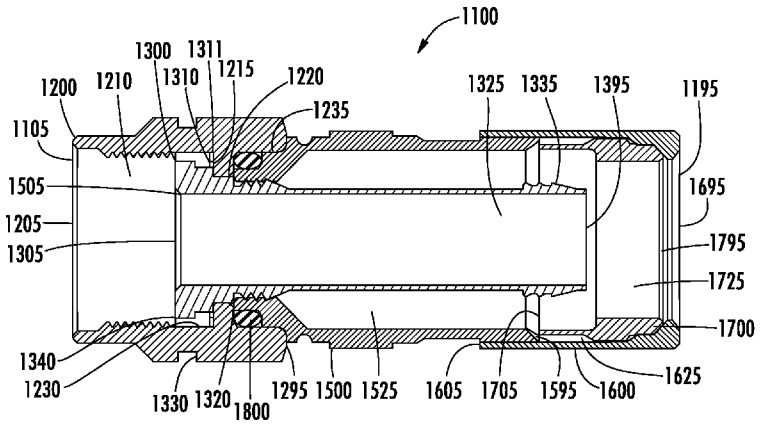

FIG. 27

(57) **Abstract**: A coaxial cable connector for coupling an end of a coaxial cable to a terminal is disclosed. The connector has a coupler, a body assembled with the coupler, and a post assembled with the coupler and the body. The coupler is adapted to couple the connector and, thereby, the coaxial cable to the terminal. The post is adapted to receive an end of a coaxial cable and has a contacting portion of monolithic construction with the post. The contacting portion extends in a generally perpendicular orientation with respect to a longitudinal axis of the connector, and is configured to maintain the generally perpendicular orientation and facilitate and electrical continuity between the post and the coupler to provide RF shielding such that the integrity of an electrical signal transmitted through coaxial cable connector is maintained regardless of the tightness of the coupling of the connector to the terminal.

WO 2014/189718 A1

COAXIAL CABLE CONNECTOR WITH INTEGRAL RFI PROTECTION

[0001] **BACKGROUND**

Field of the Disclosure

[0002] The technology of the disclosure relates to coaxial cable connectors and, in particular, to a coaxial cable connector that provides radio frequency interference (RFI) protection and grounding shield.

Technical Background

[0003] Coaxial cable connectors, such as type F connectors, are used to attach coaxial cable to another object or appliance, e.g., a television set, DVD player, modem or other electronic communication device having a terminal adapted to engage the connector. The terminal of the appliance includes an inner conductor and a surrounding outer conductor.

[0004] Coaxial cable includes a center conductor for transmitting a signal. The center conductor is surrounded by a dielectric material, and the dielectric material is surrounded by an outer conductor. The outer conductor may be in the form of one or both of a conductive foil and a braided sheath. The outer conductor is typically maintained at ground potential to shield the signal transmitted by the center conductor from stray noise, and to maintain continuous desired impedance over the signal path. The outer conductor is usually surrounded by a plastic cable jacket that electrically insulates, and mechanically protects, the outer conductor. Prior to installing a coaxial connector onto an end of the coaxial cable, the end of the coaxial cable is typically prepared by stripping off the end portion of the jacket to expose the end portion of the outer conductor. Similarly, it is common to strip off a portion of the dielectric to expose the end portion of the center conductor.

Date Reçue/Date Received 2020-09-21

[0005] Coaxial cable connectors of the type known in the trade as "F connectors" often include a tubular post designed to slide over the dielectric material, and under the outer conductor of the coaxial cable, at the prepared end of the coaxial cable. If the outer conductor of the cable includes a braided sheath, then the exposed braided sheath is usually folded back over the cable jacket. The cable jacket and folded-back outer conductor extend generally around the outside of the tubular post and are typically received in an outer body of the connector; this outer body of the connector is often fixedly secured to the tubular post. A coupler is typically rotatably secured around the tubular post and includes an internally-threaded region for engaging external threads formed on the outer conductor of the appliance terminal.

[0006] When connecting the end of a coaxial cable to a terminal of a television set, equipment box, modem, computer or other appliance, it is important to achieve a reliable electrical connection between the outer conductor of the coaxial cable and the outer conductor of the appliance terminal. Typically, this goal is usually achieved by ensuring that the coupler of the connector is fully tightened over the connection port of the appliance. When fully tightened, the head of the tubular post of the connector directly engages the edge of the outer conductor of the appliance port, thereby making a direct electrical ground connection between the outer conductor of the appliance port and the tubular post. In turn, the tubular post is engaged with the outer conductor of the coaxial cable.

[0007] With the increased use of self-install kits provided to home owners by some CATV system operators has come a rise in customer complaints due to one or both of poor picture quality in video systems and poor data performance in computer/internet systems. Additionally, CATV system operators have found upstream data problems induced by entrance of unwanted radio frequency ("RF") signals into their systems. Complaints of this nature result in CATV system operators having to send a technician to address the issue. Often times it is reported by the technician that the cause of the problem is due to a loose F connector fitting, sometimes as a result of inadequate installation of the self-install kit by the homeowner. An improperly installed or loose connector may result in poor signal transfer because there are discontinuities along the electrical path between the devices, resulting in ingress of undesired RF signals where RF energy from an external source or sources may enter the connector/cable arrangement causing a signal to noise ratio problem resulting in an unacceptable picture or data performance. In particular, RF

signals may enter CATV systems from wireless devices, such as cell phones, computers and the like, especially in the 700 – 800 MHz transmitting range, resulting in radio frequency interference (RFI).

[0008] Many of the current state of the art F connectors rely on intimate contact between the F male connector interface and the F female connector interface. If, for some reason, the connector interfaces are allowed to pull apart from each other, such as in the case of a loose F male coupler, an interface "gap" may result. If not otherwise protected this gap can be a point of RF ingress as previously described.

[0009] A shield that completely surrounds or encloses a structure or device to protect it against RFI may be referred to as a "Faraday cage." However, providing such RFI shielding within given structures is complicated when the structure or device comprises moving parts, such as seen in a coaxial connector. Accordingly, creating a connector to act in a manner similar to a Faraday cage to prevent ingress and egress of RF signals can be especially challenging due to the necessary relative movement between connector components required to couple the connector to a related port. Relative movement of components due to mechanical clearances between the components can result in an ingress or egress path for unwanted RF signals and, further, can disrupt the electrical and mechanical communication between components necessary to provide a reliable ground path. The effort to shield and electrically ground a coaxial connector is further complicated when the connector is required to perform when improperly installed, i.e. not tightened to a corresponding port.

[0010] U.S. Patent No. 5,761,053 to, teaches that "[e]lectromagnetic interference (EMI) has been defined as undesired conducted or radiated electrical disturbances from an electrical or electronic apparatus, including transients, which can interfere with the operation of other electrical or electronic apparatus. Such disturbances can occur anywhere in the electromagnetic spectrum. RFI is often used interchangeably with electromagnetic interference, although it is more properly restricted to the radio frequency portion of the electromagnetic spectrum, usually defined as between 24 kilohertz (kHz) and 240 gigahertz (GHz). A shield is defined as a metallic or otherwise electrically conductive configuration inserted between a source of EMI/RFI and a desired area of protection. Such a shield may be provided to prevent electromagnetic energy from radiating from a source. Additionally, such a shield may prevent external electromagnetic energy from entering the shielded system. As a practical matter, such shields normally take the

form of an electrically conductive housing which is electrically grounded. The energy of the EMI/RFI is thereby dissipated harmlessly to ground. Because EMI/RFI disrupts the operation of electronic components, such as integrated circuit (IC) chips, IC packages, hybrid components, and multi-chip modules, various methods have been used to contain EMI/RFI from electronic components. The most common method is to electrically ground a "can" that will cover the electronic components, to a substrate such as a printed wiring board. As is well known, a can is a shield that may be in the form of a conductive housing, a metallized cover, a small metal box, a perforated conductive case wherein spaces are arranged to minimize radiation over a given frequency band, or any other form of a conductive surface that surrounds electronic components. When the can is mounted on a substrate such that it completely surrounds and encloses the electronic components, it is often referred to as a Faraday Cage. Presently, there are two predominant methods to form a Faraday cage around electronic components for shielding use. A first method is to solder a can to a ground strip that surrounds electronic components on a printed wiring board (PWB). Although soldering a can provides excellent electrical properties, this method is often labor intensive. Also, a soldered can is difficult to remove if an electronic component needs to be re-worked. A second method is to mechanically secure a can, or other enclosure, with a suitable mechanical fastener, such as a plurality of screws or a clamp, for example. Typically, a conductive gasket material is usually attached to the bottom surface of a can to ensure good electrical contact with the ground strip on the PWB. Mechanically securing a can facilitates the re-work of electronic components. However, mechanical fasteners are bulky and occupy "valuable" space on a PWB."

[0011] Coaxial cable connectors have attempted to address the above problems by incorporating a continuity member into the coaxial cable connector as a separate component. In this regard, **Figure 1** illustrates a connector **1000** having a coupler **2000**, a separate post **3000,** a separate continuity member **4000**, and a body **5000**. In connector **1000** the separate continuity member **4000** is captured between post **3000** and body **5000** and contacts at least a portion of coupler **2000**. Coupler **2000** may be made of metal such as brass and plated with a conductive material such as nickel. Post **3000** may be made of metal such as brass and plated with a conductive material such as tin. Separate conductive member **4000** may be made of metal such as phosphor bronze and plated with a conductive material such as tin. Body **5000** may be made of metal such as brass and plated with a conductive material such as nickel.

SUMMARY

[0012] Embodiments disclosed herein include a coaxial cable connector used for coupling an end of a coaxial cable to an equipment connection port or terminal. The coaxial cable connector has a post and a coupler. The post is adapted to receive an end of a coaxial cable and has a contacting portion of monolithic construction with the post. The coupler is rotatably attached to the post, has an internally projecting lip and is adapted to couple the connector, and, thereby, the coaxial cable, to the port or terminal. The contacting portion extends in a generally perpendicular orientation with respect to a longitudinal axis of the connector and is configured to maintain the generally perpendicular orientation. The contacting portion facilitates electrical continuity between the post and the coupler to provide RF shielding such that the integrity of an electrical signal transmitted through coaxial cable connector is maintained regardless of the tightness of the coupling of the connector to the terminal.

[0013] Other embodiments disclosed herein include a coaxial cable connector used for coupling an end of a coaxial cable to an equipment connection port or terminal. The connector has a post and a coupler. The post is adapted to receive an end of a coaxial cable and has a contacting portion of monolithic construction with the post. The coupler is rotatably attached to the post, has an internally projecting lip and is adapted to couple the connector, and, thereby, the coaxial cable, to the port or terminal. The contacting portion extends in a generally perpendicular orientation with respect to a longitudinal axis of the connector and contacts a forward facing surface of the lip of the coupler. The contacting portion is configured to maintain the generally perpendicular orientation and facilitate electrical continuity between the post and the coupler to provide RF shielding such that the integrity of an electrical signal transmitted through coaxial cable connector is maintained regardless of the tightness of the coupling of the connector to the terminal.

[0014] Additional features and advantages are set out in the detailed description which follows, and in part will be readily apparent to those skilled in the art from that description or recognized by practicing the embodiments as described herein, including the detailed description, the claims, as well as the appended drawings.

[0015] It is to be understood that both the foregoing general description and the following detailed description are merely exemplary, and are intended to provide an overview or

framework to understanding the nature and character of the claims. The accompanying drawings are included to provide a further understanding, and are incorporated in and constitute a part of this specification. The drawings illustrate one or more embodiment(s), and together with the description serve to explain principles and operation of the various embodiments.

BRIEF DESCRIPTION OF THE DRAWINGS

[0016] Figure 1 is a side cross sectional view of a coaxial cable connector;

[0017] Figure 2 is a side, cross sectional view of an exemplary embodiment of a coaxial connector comprising a post with a contacting portion providing an integral RFI and grounding shield;

[0018] Figure 3A is side, cross-sectional view of the coaxial cable connector of **Figure 2** in a state of partial assembly;

[0019] Figure 3B is a partial, cross-sectional detail view of the post of the coaxial cable connector of **Figure 2** in a state of further assembly than as illustrated in **Figure 3A**, and illustrating the contacting portion of the post beginning to form to a contour of the coupler;

[0020] Figure 3C is a partial, cross-sectional detail view of the post of the coaxial cable connector of **Figure 2** in a state of further assembly than as illustrated in **Figures 3A** and **3B**, and illustrating the contacting portion of the post continuing to form to a contour of the coupler;

[0021] Figure 3D is a partial, cross-sectional detail view of the post of the coaxial cable connector of **Figure 2** in a state of further assembly than as illustrated in **Figures 3A, 3B** and **3C** and illustrating the contacting portion of the post forming to a contour of the coupler;

[0022] Figure 4A is a partial, cross-sectional view of the post of the coaxial cable connector of **Figure 2** in which the post is partially inserted into a forming tool;

[0023] Figure 4B is a partial, cross-sectional detail view of the post of the coaxial cable connector of **Figure 2** in which the post is inserted into the forming tool further than as illustrated in **Figure 4A** using a forming tool and illustrating the contacting portion of the post beginning to form to a contour of the forming tool;

[0024] Figure 4C is a partial cross-sectional detail view of the post of the coaxial cable connector of **Figure 2** in in which the post is inserted into the forming tool further than as illustrated in **Figures 4A** and **4B** illustrating the contacting portion of the post continuing to form to the contour of the forming tool;

[0025] Figure 4D is a partial cross-sectional detail view of the post of the coaxial cable connector of **Figure 2** in which the post is fully inserted into the forming tool and illustrating the contacting portion of the post forming to the contour of the forming tool;

[0026] Figures 5A through **5H** are front and side schematic views of exemplary embodiments of the contacting portions of the post;

[0027] Figure 6 is a cross-sectional view of an exemplary embodiment of a coaxial cable connector comprising an integral pin, in the state of assembly with body having a contacting portion forming to a contour of the coupler;

[0028] Figure 6A is a cross-sectional view of the coaxial cable connector illustrated in **Figure 6** in a partial state of assembly illustrating the contacting portion of the body and adapted to form to a contour of the coupler;

[0029] Figure 7 is a cross-sectional view of an exemplary embodiment of a coaxial cable connector comprising an integral pin, wherein the coupler rotates about a body instead of a post and the contacting portion is part of a component press fit into the body and forming to a contour of the coupler;

[0030] Figure 8 is a cross-sectional view of an exemplary embodiment of a coaxial cable connector in a partial state of assembly and comprising an integral pin, wherein the coupler rotates about a body instead of a post and the contacting portion is part of a component press position in the body and forming to a contour of the coupler;

[0031] Figure 8A is a front and side detail view of the component having the contacting portion of the coaxial cable connector of **Figure 8;**

[0032] Figure 9 is a cross sectional view of an exemplary embodiment of a coaxial cable connector comprising a post-less configuration, and a body having a contacting portion forming to a contour of the coupler;

[0033] Figure 10 is a cross sectional view of an exemplary embodiment of a coaxial cable connector comprising a hex crimp body and a post having a contacting portion forming to a contour of the coupler;

[0034] Figure 11 is an isometric, schematic view of the post of the coaxial cable connector of **Figure 2** wherein the post has a contacting portion in a formed state;

[0035] Figure 12 is an isometric, cross-sectional view of the post and the coupler of the coaxial cable connector of **Figure 2** illustrating the contacting portion of the post forming to a contour of the coupler;

[0036] Figure 13 is a cross-sectional view of an exemplary embodiment of a coaxial cable connector having a coupler with a contacting portion forming to a contour of the post;

[0037] Figure 14 is a cross-sectional view of an exemplary embodiment of a coaxial cable connector having a post with a contacting portion forming to a contour of the coupler;

[0038] Figure 15 is a cross-sectional view of an exemplary embodiment of a coaxial cable connector having a post with a contacting portion forming to a contour behind a lip in the coupler toward the rear of the coaxial cable connector;

[0039] Figure 16 is a cross-sectional view of an exemplary embodiment of a coaxial cable connector having a post with a contacting portion forming to a contour behind a lip in the coupler toward the rear of the coaxial cable connector;

[0040] Figure 17 is a cross-sectional view of an exemplary embodiment of a coaxial cable connector having a body with a contacting portion forming to a contour behind a lip in the coupler toward the rear of the coaxial cable connector;

[0041] Figure 18 is a cross-sectional view of an exemplary embodiment of a coaxial cable connector having a post with a contacting portion forming to a contour of a coupler with an undercut;

[0042] Figure 18A is a partial, cross-sectional view of an exemplary embodiment of a coaxial cable connector having a post with a contacting portion forming to a contour of a coupler with an undercut having a prepared coaxial cable inserted in the coaxial cable connector;

[0043] Figure 19 is a partial, cross-sectional view of an exemplary embodiment of a coaxial cable connector having a moveable post with a contacting portion wherein the post is in a forward position;

[0044] Figure 20 is a partial cross sectional view of the coaxial cable connector of **Figure 19** with the movable post in a rearward position and the contacting portion of the movable post forming to a contour of the coupler;

[0045] Figure 21 is a cross-sectional view of an exemplary embodiment of a coaxial cable connector comprising an integral pin;

[0046] Figure 22 is a cross-sectional view of the coaxial cable connector illustrated in **Figure 21** in a partial state of assembly illustrating the contacting portion of the retainer and adapted to form to a contour of the coupler;

[0047] Figure 23 is a cross-sectional view of the coaxial cable connector illustrated in **Figure 21** in a partial state of successively further assembly illustrating the contacting portion of the retainer and adapted to form to a contour of the coupler;

[0048] Figure 24 is a cross-sectional view of the coaxial cable connector illustrated in **Figure 21** in a partial state of yet successively further assembly illustrating the contacting portion of the retainer and adapted to form to a contour of the coupler wherein the retainer is in an un-flared condition;

[0049] Figure 25 is cross-sectional views of the coaxial cable connector illustrated in **Figure 21** in a partial state of still yet successively further assembly illustrating the contacting portion of the retainer and adapted to form to a contour of the coupler where in the retainer is in a final flared condition;

[0050] Figure 26 is a side, cross sectional view of an exemplary embodiment of an assembled coaxial cable connector providing for circuitous electrical paths at the coupler to form an integral Faraday cage for RF protection;

[0051] Figure 27 is a cross sectional view of an exemplary embodiment of a coaxial connector comprising a post with an integral shield element;

[0052] Figure 28 is a schematic front view of a post of the coaxial connector of **Figure 27**, wherein the post has an integral contacting portion in the form of a flange;

[0053] Figure 29 is a schematic side view of the post of **Figure 28** showing the flange prior to it being formed;

[0054] Figure 30 is a schematic side view of the post of **Figure 28** shown with the flange formed;

[0055] Figure 31 is a partial cross sectional detail view of the coaxial cable connector with the post in a state of partial assembly;

[0056] Figure 32 is a partial cross sectional detail view of the coaxial cable connector with the post in a state of further assembly than as shown in **Figure 31**; and

[0057] Figure 33 is a partial cross sectional detail view of the coaxial cable connector with the post in a state of further assembly than as shown in **Figures 31** and **32**.

DETAILED DESCRIPTION

[0058] Reference will now be made in detail to the embodiments, examples of which are illustrated in the accompanying drawings, in which some, but not all embodiments are shown. Indeed, the concepts may be embodied in many different forms and should not be construed as limiting herein. Rather, these embodiments are provided so that this disclosure will satisfy applicable legal requirements. Whenever possible, like reference numbers will be used to refer to like components or parts.

[0059] Coaxial cable connectors are used to couple a prepared end of a coaxial cable to a threaded female equipment connection port of an appliance. The coaxial cable connector may have a post, a moveable post or be postless. In each case, though, in addition to providing an electrical and mechanical connection between the conductor of the coaxial connector and the conductor of the female equipment connection port, the coaxial cable connector provides a ground path from an outer conductor of the coaxial cable to the equipment connection port. The outer conductor may be, as examples, a conductive foil or a braided sheath. To provide RF shielding, electrical continuity may be established through the components of the coaxial connector other than by using a separate grounding or continuity member or component. In other words, electrical continuity may be established other than by using a component unattached from or independent of the other components , which other components may include, but not be limited to, a coupler, a post, a retainer and a body. In this way, the number of components in the coaxial cable connector may be reduced, manufacture simplified, and performance increased.

[0060] Maintaining electrical continuity and, thereby, a stable ground path, protects against the ingress of undesired or spurious radio frequency ("RF") signals which may degrade performance of the appliance. In such a way, the integrity of the electrical signal transmitted through coaxial cable connector may be maintained. This is especially applicable when the coaxial cable connector is not fully tightened to the equipment connection port, either due to not being tightened upon initial installation or due to becoming loose after installation.

[0061] RF shielding within given structures may be complicated when the structure or device comprises moving parts, such as a coaxial cable connector. Providing a coaxial cable connector that acts as a Faraday cage to prevent ingress and egress of RF signals can be especially

challenging due to the necessary relative movement between connector components required to couple the connector to an equipment port. Relative movement of components due to mechanical clearances between the components can result in an ingress or egress path for unwanted RF signal and, further, can disrupt the electrical and mechanical communication between components necessary to provide a reliable ground path. To overcome this situation the coaxial cable connector may incorporate one or more circuitous paths that allow necessary relative movement between connector components and still inhibit ingress or egress of RF signal. This path combined with an integral grounding flange of a component that moveably contacts a coupler acts as a rotatable or moveable Faraday cage within the limited space of a RF coaxial connector creating a connector that both shields against RFI and provides electrical ground even when improperly installed.

[0062] Embodiments disclosed herein include a coaxial cable connector having an inner conductor, a dielectric surrounding the inner conductor, an outer conductor surrounding the dielectric, and a jacket surrounding the outer conductor and used for coupling an end of a coaxial cable to an equipment connection port. The coaxial cable comprises a coupler, a body a post, and, optionally, a retainer. The coupler is adapted to couple the connector to the equipment connection port. The coupler has a step and a threaded portion adapted to connect with a threaded portion of the equipment connection port. At least one thread on the coupler has a pitch angle different than a pitch angle of at least one thread of the equipment connection port. The body is assembled with the coupler. The post is assembled with the coupler and the body and is adapted to receive an end of a coaxial cable. The post or the retainer may include a flange, a contacting portion and a shoulder. The contacting portion is integral and monolithic with at least a portion of the post or retainer.

[0063] A first circuitous path is established by the step, the flange, the contacting portion and the shoulder. A second circuitous path is established by the threaded portion of the coupler and the threaded portion of the equipment connection port. The first circuitous path and the second circuitous path provide for RF shielding of the assembled coaxial cable connector wherein RF signals external to the coaxial cable connector are attenuated by at least about 50dB in a range up to about 1000MHz, and the integrity of an electrical signal transmitted through coaxial cable connector is maintained regardless of the tightness of the coupling of the connector to the equipment connection port. A transfer impedance averages about 0.24 ohms. Additionally, the

pitch angle of the thread of the coupler may be about 2 degrees different than the pitch angle of the thread of the equipment connection port. As a non-limiting example, the pitch angle of the thread of the coupler may be about 62 degrees, and the pitch angle of the thread of the equipment connection port is about 60 degrees.

[0064] For purposes of this description, the term "forward" will be used to refer to a direction toward the portion of the coaxial cable connector that attaches to a terminal, such as an appliance equipment port. The term "rearward" will be used to refer to a direction that is toward the portion of the coaxial cable connector that receives the coaxial cable. The term "terminal" will be used to refer to any type of connection medium to which the coaxial cable connector may be coupled, as examples, an appliance equipment port, any other type of connection port, or an intermediate termination device. Further, it should be understood that the term "RF shield" or "RF shielding" shall be used herein to also refer to radio frequency interference (RFI) shield or shielding and electromagnetic interference (EMI) shield or shielding, and such terms should be considered as synonymous. Additionally, for purposes herein, electrical continuity shall mean DC contact resistance from the outer conductor of the coaxial cable to the equipment port of less than about 3000 milliohms. Accordingly, a DC contact resistance of more than about 3000 milliohms shall be considered as indicating electrical discontinuity or an open in the path between the outer conductor of the coaxial cable and the equipment port.

[0065] Referring now to **Figure 2**, there is illustrated an exemplary embodiment of a coaxial cable connector **100**. The coaxial cable connector **100** has a front end **105**, a back end **195**, a coupler **200**, a post **300,** a body **500, a** shell **600** and a gripping member **700.** The coupler **200** comprises a front end **205**, a back end **295**, a central passage **210**, a radially inwardly projecting lip **215** with a forward facing surface **216** and a rearward facing surface **217**, a through-bore **220** formed by the lip **215**, and a bore **230**. Coupler **200** may be made of metal such as brass and plated with a conductive material such as nickel. Alternately or additionally, selected surfaces of the coupler **200** may be coated with conductive or non-conductive coatings or lubricants, or a combination thereof. Post **300** may be tubular and include a front end **305**, a back end **395**, and a contacting portion **310**. In **Figure 2**, contacting portion **310** is shown as a protrusion integrally formed and monolithic with post **300**. Contacting portion **310** may, but does not have to be, radially projecting. Post **300** may also comprise an enlarged shoulder **340**, a flange **320**, a through-bore **325**, a rearward

facing annular surface **330,** and a barbed portion **335** proximate the back end **395**. The post **300** may be made of metal such as brass and plated with a conductive material such as tin. Additionally, the material, in an exemplary embodiment, may have a suitable spring characteristic permitting contacting portion **310** to be flexible, as described below. Alternately or additionally, selected surfaces of post **300** may be coated with conductive or non-conductive coatings or lubricants or a combination thereof. Contacting portion **310**, as noted above, is monolithic with post **300** and provides for electrical continuity through the connector **100** to an equipment port (not shown in **Figure 2**) to which connector **100** may be coupled. In this manner, post **300** provides for a stable ground path through the connector **100**, and, thereby, electromagnetic or RF shielding to protect against the ingress and egress of RF signals. Electrical continuity is established through the coupler **200**, the post **300**, and the body other than by the use of a component unattached from or independent of the coupler **200**, the post **300**, and the body **500**, to provide RF shielding. In this way, the integrity of an electrical signal transmitted through coaxial cable connector **100** may be maintained regardless of the tightness of the coupling of the connector **100** to the terminal. Maintaining electrical continuity and, thereby, a stable ground path, protects against the ingress of undesired or spurious radio frequency ("RF") signals which may degrade performance of the appliance. In such a way, the integrity of the electrical signal transmitted through coaxial cable connector **100** may be maintained. This is especially applicable when the coaxial cable connector **100** is not fully tightened to the equipment connection port, either due to not being tightened upon initial installation or due to becoming loose after installation.

[0066] Body **500** comprises a front end **505**, a back end **595**, and a central passage **525.** Body **500** may be made of metal such as brass and plated with a conductive material such as nickel. Shell **600** comprises a front end **605**, a back end **695**, and a central passage **625**. Shell **600** may be made of metal such as brass and plated with a conductive material such as nickel. Gripping member 7**00** comprises a front end **705**, a back end **795**, and a central passage **725**. Gripping member 7**00** may be made of a suitable polymer material such as acetal or nylon. The resin can be selected from thermoplastics characterized by good fatigue life, low moisture sensitivity, high resistance to solvents and chemicals, and good electrical properties.

[0067] In **Figure 2**, coaxial cable connector **100** is shown in an unattached, uncompressed state, without a coaxial cable inserted therein. Coaxial cable connector **100** couples a prepared end of a coaxial cable to a terminal, such as a threaded female equipment appliance connection port (not shown in **Figure 2**). This will be discussed in more detail with reference to **Figure 18A.** Shell **600** slideably attaches to body **500** at back end **595** of body **500**. Coupler **200** attaches to coaxial cable connector **100** at back end **295** of coupler **200**. Coupler **200** may rotatably attach to front end **305** of post **300** while engaging body **500** by means of a press-fit. Front end **305** of post **300** positions in central passage **210** of coupler **200** and has a back end **395** which is adapted to extend into a coaxial cable. Proximate back end **395**, post **300** has a barbed portion **335** extending radially outwardly from post **300.** An enlarged shoulder **340** at front end **305** extends inside the coupler **200**. Enlarged shoulder **340** comprises a collar portion **320** and a rearward facing annular surface **330.** Collar portion **320** allows coupler **200** to rotate by means of a clearance fit with through-bore **220** of coupler **200**. Rearward facing annular surface **330** limits forward axial movement of the coupler **200** by engaging forward facing surface **216** of lip **215**. Coaxial cable connector **100** may also include a sealing ring **800** seated within coupler **200** to form a seal between coupler **200** and body **500.**

[0068] Contacting portion **310** may be monolithic with or a unitized portion of post **300**. As such, contacting portion **310** and post **300** or a portion of post **300** may be constructed from a single piece of material. The contacting portion **310** may contact coupler **200** at a position that is forward of forward facing surface **216** of lip **215**. In this way, contacting portion **310** of post **300** provides an electrically conductive path between post **300**, coupler **200** and body **500.** This enables an electrically conductive path from coaxial cable through coaxial cable connector **100** to terminal providing an electrical ground and a shield against RF ingress and egress. Contacting portion **310** is formable such that as the coaxial cable connector **100** is assembled, contacting portion **310** may form to a contour of coupler **200**. In other words, coupler **200** forms or shapes contacting portion **310** of post **300**. The forming and shaping of the contacting portion **310** may have certain elastic/plastic properties based on the material of contacting portion **310**. Contacting portion **310** deforms , upon assembly of the components of coaxial cable connector **100**, or, alternatively contacting portion **310** of post **300** may be pre-formed, or partially preformed to electrically contactedly fit with coupler **200** as explained in greater detail with reference to **Figure 4A** through **Figure 4D**, below. In this manner, post **300** is secured within

coaxial cable connector **100**, and contacting portion **310** establishes an electrically conductive path between body **500** and coupler **200**. Further, the electrically conductive path remains established regardless of the tightness of the coaxial cable connector **100** on the terminal due to the elastic/plastic properties of contacting portion **310**. This is due to contacting portion **310** maintaining mechanical and electrical contact between components, in this case, post **300** and coupler **200**, notwithstanding the size of any interstice between the components of the coaxial cable connector **100**. In other words, contacting portion **310** is integral to and maintains the electrically conductive path established between post **300** and coupler **200** even when the coaxial cable connector **100** is loosened or partially disconnected from the terminal, provided there is some contact of coupler **200** with equipment port.

[0069] Although coaxial connector **100** in **Figure 2** is an axial-compression type coaxial connector having a post **300**, contacting portion **310** may be integral to and monolithic with any type of coaxial cable connector and any other component of a coaxial cable connector, examples of which will be discussed herein with reference to the embodiments. However, in all such exemplary embodiments, contacting portion **310** provides for electrical continuity from an outer conductor of a coaxial cable received by coaxial cable connector **100** through coaxial cable connector **100** to a terminal, without the need for a separate component. Additionally, the contacting portion **310** provides for electrical continuity regardless of how tight or loose the coupler is to the terminal. In other words, contacting portion **310** provides for electrical continuity from the outer conductor of the coaxial cable to the terminal regardless or irrespective of the tightness or adequacy of the coupling of the coaxial cable connector **100** to the terminal. It is only necessary that the coupler **200** be in contact with the terminal.

[0070] Referring now to **Figures 3A, 3B 3C** and **3D**, post **300** is illustrated in different states of assembly with coupler **200** and body **500**. In **Figure 3A,** post **300** is illustrated partially assembled with coupler **200** and body **500** with contacting portion **310** of post **300**, shown as a protrusion, outside and forward of coupler **200**. Contacting portion **310** may, but does not have to be, radially projecting. In **Figure 3B**, contacting portion **310** has begun to advance into coupler **200** and contacting portion **310** is beginning to form to a contour of coupler **200**. As illustrated in **Figure 3B**, contacting portion **310** is forming to an arcuate or, at least, a partially arcuate shape. As post **300** is further advanced into coupler **200** as shown in **Figure 3C**, contacting portion **310** continues to form to the contour of coupler **200**. When assembled as

shown in **Figure 3D**, contacting portion **310** is forming to the contour of coupler **200** and is contactedly engaged with bore **230** accommodating tolerance variations with bore **230**. In **Figure 3D** coupler **200** has a face portion **202** that tapers. The face portion **202** guides the contacting portion **310** to its formed state during assembly in a manner that does not compromise its structural integrity, and, thereby, its elastic/plastic property. Face portion **202** may be or have other structural features, as a non-limiting example, a curved edge, to guide the contacting portion **310**. The flexible or resilient nature of the contacting portion **310** in the formed state as described above permits coupler **200** to be easily rotated and yet maintain a reliable electrically conductive path. It should be understood, that contacting portion **310** is formable and, as such, may exist in an unformed and a formed state based on the elastic/plastic property of the material of contacting portion **310**. As the coaxial cable connector **100** assembles contacting portion **310** transitions from an unformed state to a formed state.

[0071] Referring now to **Figures 4A, 4B, 4C** and **4D** the post **300** is illustrated in different states of insertion into a forming tool **900**. In **Figure 4A**, post **300** is illustrated partially inserted in forming tool **900** with contacting portion **310** of post **300** shown as a protrusion**.** Protrusion may, but does not have to be radially projecting. In **Figure 4B**, contacting portion **310** has begun to advance into forming tool **900**. As contacting portion **310** is advanced into forming tool **900**, contact portion **310** begins flexibly forming to a contour of the interior of forming tool **900**. As illustrated in **Figure 4B**, contacting portion **310** is forming to an arcuate or, at least, a partially arcuate shape. As post **300** is further advanced into forming tool **900** as shown in Figure **4C**, contacting portion **310** continues forming to the contour of the interior of forming tool **900**. At a final stage of insertion as shown in Figure **4C** contacting portion **310** is fully formed to the contour of forming tool **900,** and has experienced deformation in the forming process but retains spring or resilient characteristics based on the elastic/plastic property of the material of contacting portion **310**. Upon completion or partial completion of the forming of contacting portion **310,** post **300** is removed from forming tool **900** and may be subsequently installed in the connector **100** or other types of coaxial cable connectors. This manner of forming or shaping contacting portion **310** to the contour of forming tool **900** may be useful to aid in handling of post **300** in subsequent manufacturing processes, such as plating for example. Additionally, use of this method makes it possible to achieve various configurations of contacting portion **310** formation as illustrated in **Figures 5A** through **5H**.

[0072] **Figure 5A** is a side schematic view of an exemplary embodiment of post **300** where contacting portion **310** is a radially projecting protrusion that completely circumscribes post **300**. In this view, contacting portion **310** is formable but has not yet been formed to reflect a contour of coaxial cable connector or forming tool. Figure **5B** is a front schematic view of the post **300** of **Figure 5**. **Figure 5C** is a side schematic view of an exemplary embodiment of post **300** where contacting portion **310** has a multi-cornered configuration. Contacting portion **310** may be a protrusion and may, but does not have to be, radially projecting. Although in **Figure 5C** contacting portion **310** is shown as tri-cornered, contacting portion **310** can have any number of corner configurations, as non-limiting examples, two, three, four, or more. In **Figure 5C**, contacting portion **310** may be formable but has not yet been formed to reflect a contour of coaxial cable connector or forming tool. **Figure 5D** is a front schematic view of post **300** of **Figure 5C.** Figure **5E** is a side schematic view of post **300** where contacting portion **310** has a tri-cornered configuration. In this view, contacting portion **310** is shown as being formed to a shape in which contacting portion **310** cants or slants toward the front end **305** of post **300**. Figure **5F** is a front schematic view of post **300** of **Figure 5E.** **Figure 5G** is a side schematic view of an exemplary embodiment of post **300** where contacting portion **310** has a tri-cornered configuration. In this view contacting portion **310** is formed in a manner differing from **Figure 5E** in that indentations **311** in contacting portion **310** result in a segmented or reduced arcuate shape **313**. **Figure 5H** is a front schematic view of post **300** of **Figure 5G.**

[0073] It will be apparent to those skilled in the art that contacting portion **310** as illustrated in **Figures 2-5H** may be integral to and monolithic with post **300**. Additionally, contacting portion **310** may have or be any shape, including shapes that may be flush or aligned with other portions of post **300**, or may have any number of configurations, as non-limiting examples, configurations ranging from completely circular to multi-cornered geometries, and still perform its function of providing electrical continuity. Further, contacting portion **310** may be formable and formed to any shape or in any direction.

[0074] **Figure 6** is a cross-sectional view of an exemplary embodiment of a coaxial cable connector **110** comprising an integral pin **805,** wherein coupler **200** rotates about body **500** instead of post **300** and contacting portion **510** is a protrusion from, integral to and monolithic with body **500** instead of post **300**. In this regard, contacting portion **510** may be a unitized portion of body **500**. As such, contacting portion **510** may be constructed with body **500** or a

portion of body **500** from a single piece of material. Coaxial cable connector **110** is configured to accept a coaxial cable. Contacting portion **510** may be formed to a contour of coupler **200** as coupler **200** is assembled with body **500** as illustrated in **Figure 6A. Figure 6A** is a cross-sectional view of an exemplary embodiment of a coaxial cable connector **110** in a state of partial assembly. Contacting portion **510** has not been formed to a contour of the coupler **200**. Assembling the coupler **200** with the body **500** forms the contacting portion **510** in a rearward facing manner as opposed to a forward facing manner as is illustrated with the contacting portion **310**. However, as with contacting portion **310**, the material of contacting portion **510** has certain elastic/plastic property which, as contacting portion **510** is formed provides that contacting portion **510** will press against the contour of the coupler **200** and maintain mechanical and electrical contact with coupler **200**. Contacting portion **510** provides for electrical continuity from the outer conductor of the coaxial cable to the terminal regardless of the tightness or adequacy of the coupling of the coaxial cable connector **100** to the terminal, and regardless of the tightness of the coaxial cable connector **100** on the terminal in the same way as previously described with respect to contacting portion **310**. Additionally or alternatively, contacting portion **310** may be cantilevered or attached at only one end of a segment.

[0075] Figure 7 is a cross-sectional view of an exemplary embodiment of a coaxial cable connector **111** comprising an integral pin **805**, and a conductive component **400**. Coupler **200** rotates about body **500** instead of about a post, which is not present in coaxial cable connector **111**. Contacting portion **410** is shown as a protrusion and may be integral to, monolithically with and radially projecting from a conductive component **400** which is press fit into body **500**. Contacting portion **410** may be a unitized portion of conductive component **400**. As such, the contacting portion **410** may be constructed from a single piece of material with conductive component **400** or a portion of conductive component **400**. As with contacting portion **310**, the material of contacting portion **410** has certain elastic/plastic property which, as contacting portion **410** is formed provides that contacting portion **410** will press against the contour of the coupler **200** and maintain mechanical and electrical contact with coupler **200** as conductive component **400** inserts in coupler **200** when assembling body **500** with coupler **200** as previously described.

[0076] Figure 8 is a cross-sectional view of another exemplary embodiment of the coaxial cable connector **111** comprising an integral pin **805**, and a retaining ring **402.** The coupler **200** rotates

about body **500** instead of a post. Contacting portion **410** may be integral with and radially projecting from a retaining ring **402** which fits into a groove formed in body **500**. The contacting portion **410** may be a unitized portion of the retaining ring **402**. As such, the contacting portion **410** may be constructed from a single piece of material with the retaining ring **402** or a portion of the retaining ring **402**. In this regard, **Figure 8A** illustrates front and side views of the retaining ring **402**. In **Figure 8A**, contacting portion **410** is shown as three protrusions integral with and radially projecting from retaining ring **402**. As discussed above, the material of contacting portion **410** has certain elastic/plastic property which, as contacting portion **410** is formed provides that contacting portion **410** will press against the contour of the coupler **200** and maintain mechanical and electrical contact with coupler **200** as retaining ring **402** inserts in coupler **200** when assembling body **500** with coupler **200** as previously described.

[0077] It will be apparent to those skilled in the art that the contacting portion **410** as illustrated in **Figures 6-8A** may be integral to the body **500** or may be attached to or be part of another component **400**, **402**. Additionally, the contacting portion **410** may have or be any shape, including shapes that may be flush or aligned with other portions of the body **500** or another component **400, 402**, or may have any number of configurations, as non-limiting examples, configurations ranging from completely circular to multi-cornered geometries.

[0078] Figure 9 is a cross-sectional view of an embodiment of a coaxial cable connector **112** that is a compression type of connector with no post. In other words, having a post-less configuration. The coupler **200** rotates about body **500** instead of a post. The body **500** comprises contacting portion **510.** The contacting portion **510** is integral with the body **500**. As such, the contacting portion **510** may be constructed from a single piece of material with the body **500** or a portion of the body **500**. The contacting portion **510** forms to a contour of the coupler **200** when the coupler **200** is assembled with the body **500.**

[0079] Figure 10 is a cross-sectional view of an embodiment of a coaxial cable connector **113** that is a hex-crimp type connector. The coaxial cable connector **113** comprises a coupler **200**, a post **300** with a contacting portion **310** and a body **500.** The contacting portion **310** is integral to and monolithic with post **300.** Contacting portion **310** may be unitized with post **300**. As such, contacting portion **310** may be constructed from a single piece of material with post **300** or a portion of post **300**. Contacting portion **310** forms to a contour of coupler **200** when coupler **200**

is assembled with body **500** and post **300**. The coaxial cable connector **113** attaches to a coaxial cable by means radially compressing body **500** with a tool or tools known in the industry.

[0080] Figure 11 is an isometric schematic view of post **300** of coaxial cable connector **100** in **Figure 2** with the contacting portion **310** formed to a position of a contour of a coupler (not shown).

[0081] Figure 12 is an isometric cross sectional view of post **300** and coupler **200** of connector **100** in **Figure 2** illustrated assembled with the post **300**. The contacting portion **310** is formed to a contour of the coupler **200**.

[0082] Figure 13 is a cross-sectional view of an embodiment of a coaxial cable connector **114** comprising a post **300** and a coupler **200** having a contacting portion **210**. Contacting portion **210** is shown as an inwardly directed protrusion**.** Contacting portion **210** is integral to and monolithic with coupler **200** and forms to a contour of post **300** when post **300** assembles with coupler **200**. Contacting portion **210** may be unitized with coupler **200**. As such, contacting portion **210** may be constructed from a single piece of material with coupler **200** or a portion of coupler **200**. Contacting portion **210** provides for electrical continuity from the outer conductor of the coaxial cable to the terminal regardless of the tightness or adequacy of the coupling of the coaxial cable connector **114** to the terminal, and regardless of the tightness of coaxial cable connector **114** on the terminal. Contacting portion **210** may have or be any shape, including shapes that may be flush or aligned with other portions of coupler **200**, or may have or be formed to any number of configurations, as non-limiting examples, configurations ranging from completely circular to multi-cornered geometries.

[0083] Figures 14, 15 and **16** are cross-sectional views of embodiments of coaxial cable connectors **115** with a post similar to post **300** comprising a contacting portion **310** as described above such that the contacting portion **310** is shown as outwardly radially projecting, which forms to a contour of the coupler **200** at different locations of the coupler **200.** Additionally, the contacting portion **310** may contact the coupler **200** rearward of the lip **215**, for example as shown in **Figures 15** and **16,** which may be at the rearward facing surface **217** of the lip **215**, for example as shown in **Figure 15.**

[0084] Figure 17 is a cross-sectional view of an embodiment of a coaxial cable connector **116** with a body **500** comprising a contacting portion **310**, wherein the contacting portion **310** is shown as an outwardly directed protrusion from body **500** that forms to the coupler **200**.

[0085] **Figure 18** is a cross-sectional view of an embodiment of a coaxial cable connector **117** having a post **300** with an integral contacting portion **310** and a coupler **200** with an undercut **231**. The contacting portion **310** is shown as a protrusion that forms to the contours of coupler **200** at the position of undercut **231.** **Figure 18A** is a cross-sectional view of the coaxial cable connector **117** as shown in **Figure 18** having a prepared coaxial cable inserted in the coaxial cable connector **117**. The body **500** and the post **300** receive the coaxial cable (**Figure 18A**). The post **300** at the back end **395** is inserted between an outer conductor and a dielectric layer of the coaxial cable.

[0086] **Figure 19** is a partial, cross-sectional view of an embodiment of a coaxial cable connector **118** having a movable post **301** comprising an integral contacting portion **310**. The movable post **301** is movable in relation to the coupler **200** and to the body **500** and is shown in a forward position with the contacting portion **310** not formed by a contour of the coupler **200**. **Figure 20** is a partial, cross-sectional view of the coaxial cable connector **118** shown in **Figure 19** with the post **301** in a rearward position and the contacting portion **310** forming to a contour of the coupler **200**.

[0087] Referring now to **Figure 21,** an exemplary embodiment of a coaxial cable connector **110** configured to accept a coaxial cable and comprising an integral pin **805** is illustrated. The coaxial cable connector **110** has a coupler **200**, which rotates about body **500'**, and retainer **901**. Coaxial cable connector **110** may include post **300'**, O-ring **800**, insulating member **960**, shell **600**, and deformable gripping member **700**. O-ring **800** may be made from a rubber-like material, such as EPDM (Ethylene Propylene Diene Monomer). Body **500'** has front end **505'**, back end **595'**, and a central passage **525'** and may be made from a metallic material, such as brass, and plated with a conductive, corrosion resistant material, such as nickel. Insulating member **960** includes a front end **962**, a back end **964**, and an opening **966** between the front and rear ends and may be made of an insulative plastic material, such as high-density polyethylene or acetal. At least a portion of back end **964** of insulating member **960** is in contact with at least a portion of post **300'**. Post **300'** includes front end **305'** and rear end **395'** and may be made from a metallic material, such as brass, and may be plated with a conductive, corrosion resistant material, such as tin. Deformable gripping member **700** may be disposed within the longitudinal opening of shell **600** and may be made of an insulative plastic material, such as high-density polyethylene or acetal. Pin **805** has front end **810**, back end **812**, and flared portion **814** at its

back end **812** to assist in guiding an inner conductor of a coaxial cable into physical and electrical contact with pin **805**. Pin **805** is inserted into and substantially along opening **966** of insulating member **960** and may be made from a metallic material, such as brass, and may be plated with a conductive, corrosion resistant material, such as tin. Pin **805** and insulating member **960** are rotatable together relative to body **500'**and post **300'.**

[0088] Referring also now to **Figure 22** with **Figure 21**, retainer **901** may be tubular and comprise a front end **905**, a back end **920**, and a contacting portion **910**. Contacting portion **910** may be in the form of a protrusion extending from retainer **901**. Contacting portion **910** may, but does not have to be, radially projecting. Contacting portion may be integral to and monolithic with retainer **901**. In this regard, contacting portion **910** may be may be a unitized portion of retainer **901**. As such, contacting portion **910** may be constructed with retainer **901** from a single piece of material. The retainer **901** may be made of metal such as brass and plated with a conductive material such as tin. Retainer **901** may also comprise an enlarged shoulder **940**, flange **943**, collar portion **945**, and a through-bore **925**. Contacting portion **910** may be formed to a contour of coupler **200** as retainer **901** is assembled with body **500** as illustrated in **Figure 22** through **Figure 25**.

[0089] Continuing with reference to **Figure 22**, there is shown a cross-sectional view of the coaxial cable connector **110** partially assembled with body **500'** engaged with coupler **200** but with retainer **901** separate therefrom. In other words, in **Figure 22**, retainer **901** is shown as not yet being inserted in coupler **200**. Since retainer **901** is not inserted in coupler **200**, contacting portion **910** has not yet been formed to a contour of the coupler **200**. However, contacting portion **910** may be adapted to form to a contour of coupler **200**.

[0090] **Figure 23** illustrates coaxial cable connector **110** in a further partial state assembly than as illustrated in **Figure 22** with retainer **901** partially inserted in coupler **200**. In **Figure 23**, contacting portion **910** is shown as beginning to form to a contour of coupler **200**. Assembling the retainer **901** with coupler **200** and body **500'** (as seen in successive **Figures 24** and **25**) continues forming the contacting portion **910** in a manner similar to embodiments having a post with a contacting portion **310** as previously described. As with contacting portion **310**, the material of contacting portion **910** has certain elastic/plastic property which, as contacting portion **910** is formed, provides that contacting portion **910** may press against or be biased toward the contour of coupler **200** and, thereby, contacting portion **910** may maintain mechanical

and electrical contact with coupler **200**. In this way, contacting portion **910** provides for electrical continuity through itself, and coupler **200** and body **500'** from the outer conductor of the coaxial cable to the terminal regardless of the tightness or adequacy of the coupling of the coaxial cable connector **110** to the terminal, and regardless of the tightness of the coaxial cable connector **110** on the terminal, in the same way as previously described with respect to contacting portion **310**. In other words, electrical continuity may be established through the coupler **200**, the post **300'**, the body **500'** and the retainer **901** other than by the use of a component unattached from or independent of the coupler **200**, the post **300'**, body **500'**, and retainer **901** to provide RF shielding such that the integrity of an electrical signal transmitted through coaxial cable connector **110** is maintained regardless of the tightness of the coupling of the connector to the terminal. Maintaining electrical continuity and, thereby, a stable ground path, protects against the ingress of undesired or spurious RF signals which may degrade performance of the appliance. In such a way, the integrity of the electrical signal transmitted through coaxial cable connector **110** may be maintained. This is especially applicable when the coaxial cable connector **110** is not fully tightened to the equipment connection port, either due to not being tightened upon initial installation or due to becoming loose after installation. Contacting portion **910** may be cantilevered from or attached to retainer **910** at only one end of a segment of contacting portion **910**.

[0091] Referring now to **Figures 24**, coaxial cable connector **110** is illustrated in a further partial state of assembly than as illustrated in **Figure 23**; with retainer **901** fully inserted in coupler **200** and press fit into body **500**. In **Figure 24**, back end **920** of retainer **901** is not flared out. In other words, retainer **901** is shown in an un-flared condition. Contacting portion **910** is illustrated as formed to and within contour of coupler **200**.

[0092] **Figure 25** is an illustration coaxial cable connector **110** in in a further partial state of assembly than as illustrated in **Figure 24**. In **Figure 24**, in addition to retainer **901** being fully inserted in coupler **200** and press fit into body **500'**, back end **920** of retainer **901** is shown as flared within contours **559** of body **500'**. In other words, retainer **901** is shown in a flared condition. Flaring of back end **920** secures retainer **901** within body **500'**. It will be apparent to those skilled in the art that the contacting portion **910** as illustrated in **Figures 21-25** may be integral to the retainer **901** or may be attached to or be part of another component. Additionally, the contacting portion **910** may have or be any shape, including shapes that may be flush or

aligned with other portions of the body **500'** or another component, or may have any number of configurations, as non-limiting examples, configurations ranging from completely circular to multi-cornered geometries.

[0093] In this regard, **Figure 26** illustrates a coaxial cable connector **119** having front end **105**, back end **195,** coupler **200**, post **300**, body **500**, compression ring **600** and gripping member **700. C**oupler **200** is adapted to couple the coaxial cable connector **119** to a terminal, which includes an equipment connection port. Body **500** is assembled with the coupler **200** and post **300**. The post **300** is adapted to receive an end of a coaxial cable. Coupler **200** comprises front end **205**, back end **295** central passage **210**, lip **215**, through-bore **220,** bore **230** and bore **235**. Coupler **200** may be made of metal such as brass and plated with a conductive material such as nickel. Post **300** comprises front end **305**, back end **395**, contacting portion **310**, enlarged shoulder **340**, collar portion **320**, through-bore **325**, rearward facing annular surface **330,** shoulder **345** and barbed portion **335** proximate back end **395**. Post **300** may be made of metal such as brass and plated with a conductive material such as tin. Contacting portion **310** is integral and monolithic with post **300**. Contacting portion **310** provides a stable ground path and protects against the ingress and egress of RF signals. Body **500** comprises front end **505**, back end **595**, and central passage **525.** Body **500** may be made of metal such as brass and plated with a conductive material such as nickel. Shell **600** comprises front end **605**, back end **695**, and central passage **625.** Shell **600** may be made of metal such as brass and plated with a conductive material such as nickel. Gripping member **700** comprises front end **705**, back end **795**, and central passage **725.** Gripping member **700** may be made of a polymer material such as acetal.

[0094] Although, coaxial cable connector **119** in **Figure 26** is an axial-compression type coaxial connector having post **300**, contacting portion **310** may be incorporated in any type of coaxial cable connector. Coaxial cable connector **119** is shown in its unattached, uncompressed state, without a coaxial cable inserted therein. Coaxial cable connector **119** couples a prepared end of a coaxial cable to a threaded female equipment connection port (not shown in **Figure 26**). Coaxial cable connector **119** has a first end **105** and a second end **195**. Shell **600** slideably attaches to the coaxial cable connector **119** at back end **595** of body **500**. Coupler **200** attaches to coaxial cable connector **119** at back end **295**. Coupler **200** may rotatably attach to front end **305** of post **300** while engaging body **300** by means of a press-

fit. Contacting portion **310** is of monolithic construction with post 300, being formed or constructed in a unitary fashion from a single piece of material with post **300**. Post **300** rotatably engages central passage **210** of coupler **200** lip **215**. In this way, contacting portion **310** provides an electrically conductive path between post **300**, coupler **200** and body **500.** This enables an electrically conductive path from the coaxial cable through the coaxial cable connector **119** to the equipment connection port providing an electrical ground and a shield against RF ingress. Elimination of separate continuity member **4000** as illustrated in connector **1000** of **Figure 1** improves DC contact resistance by eliminating mechanical and electrical interfaces between components and further improves DC contact resistance by removing a component made from a material having higher electrical resistance properties.

[0095] An enlarged shoulder **340** at front end **305** extends inside coupler **200**. Enlarged shoulder **340** comprises flange **312**, contacting portion **310,** collar portion **320,** rearward facing annular surface **330** and shoulder **345.** Collar portion **320** allows coupler **200** to rotate by means of a clearance fit with through bore **220** of coupler **200.** Rearward facing annular surface **330** limits forward axial movement of coupler **200** by engaging lip **215**. Contacting portion **310** contacts coupler **200** forward of lip **215**. Contacting portion **310** may be formed to contactedly fit with the coupler **200** by utilizing coupler **200** to form contacting portion **310** upon assembly of coaxial cable connector **119** components. In this manner, contacting portion **310** is secured within coaxial cable connector **119**, and establishes mechanical and electrical contact with coupler **200** and, thereby, an electrically conductive path between post **300** and coupler **200**. Further, contacting portion **310** remains contactedly fit, in other words in mechanical and electrical contact, with coupler **200** regardless of the tightness of coaxial cable connector **119** on the appliance equipment connection port. In this manner, contacting portion **310** is integral to the electrically conductive path established between post **300** and coupler **200** even when the coaxial cable connector **119** is loosened or disconnected from the appliance equipment connection port. Post **300** has a front end **305** and a back end **395**. Back end **395** is adapted to extend into a coaxial cable. Proximate back end **395**, post **300** has a barbed portion **335** extending radially outwardly from the tubular post **300.**

[0096] Figure 27 illustrates an exemplary embodiment of a coaxial cable connector **1100.** having front end **1105**, back end **1195**, coupler **1200**, post **1300,** body **1500,** shell **1600** and gripping member **1700.** Coupler **1200** comprises front end **1205**, back end **1295** central

passage **1210**, lip **1215**, through-bore **1220,** bore **1230** and bore **1235**. Lip **1215** has a forward facing surface **1216**, rearward facing surface **1217** and intermediate portion **1218** between the forward facing surface **1216** and rearward facing surface **1217**. Coupler **1200** may be made of any suitable material, as a non-limiting example, of metal such as brass and plated with a conductive material such as nickel. Post **1300** may comprise front end **1305**, back end **1395**, contacting portion **1310**, edge **1311**, enlarged shoulder **1340**, collar portion 1**320**, through-bore **1325**, rearward facing annular surface **1330,** and barbed portion **1335** proximate back end **1395**. Back end **1395** is adapted to extend into a coaxial cable. Barbed portion **1335** extends radially outwardly from post **1300.** Post **1300** may be made of any suitable material, as a non-limiting example, of metal such as brass and plated with a conductive material such as tin.

[0097] Contacting portion **1310** may be any part of the post **1300**. As non-limiting examples, contacting portion **1310** may be a surface or some other feature of the post **1300** that is integral with the post **1300**. Contacting portion **1310** is constructed from the same unitary piece of material of the post **1300**, and, as such, is monolithic with the post **1300** or a portion of the post **1300**. In the embodiment shown in **Figure 27**, the contacting portion **1310** extends in a generally perpendicular orientation with respect to the longitudinal axis of the coaxial cable connector **1100**. The contacting portion **1310** may be configured to maintain the generally perpendicular orientation when the coaxial cable connector **1100** has been assembled. The contacting portion **1310** may facilitate electrical continuity between the post and the coupler to provide RF shielding such that the integrity of an electrical signal transmitted through coaxial cable connector **1100** is maintained regardless of the tightness of the coupling of the coaxial cable connector **1100** to the terminal. In this manner, the contacting portion **1310** functions as an integral shield to provide a stable ground path for and protect against the ingress of RF signals into the coaxial cable connector **1100**.

[0098] Body **1500** at least partially comprises front end **1505**, back end **1595**, and central passage **1525.** Body **1500** may be made of any suitable material, as a non-limiting example, of metal such as brass and plated with a conductive material such as nickel. Shell **1600** may comprise front end **1605**, back end **1695**, and central passage **1625.** Shell **1600** may be made of any suitable material, as a non-limiting example, of metal such as brass and plated with a conductive material such as nickel. Gripping member **1700** comprises front end **1705**, back

end **1795**, and central passage **1725.** Gripping member **1700** may be made of any suitable polymer material such as acetal.

[0099] Coaxial cable connector **1100** is shown in its unattached, uncompressed state, without a coaxial cable inserted therein. Although the coaxial connector **1100** in **Figure 27** is an axial-compression type coaxial connector having post **1300**, the contacting portion **1310** may be incorporated in any type of coaxial connector as illustrated with reference to other embodiments previously discussed herein. The coaxial cable connector **1100** couples a prepared end of a coaxial cable to a threaded female equipment connection port or terminal (not shown in **Figure 27**). Shell **1600** slideably attaches to the coaxial cable connector **1100** at the back end **1595** of body **1500**. Coupler **1200** may rotatably attach to the front end **1305** of post **1300** while engaging body **1500** by means of a press-fit. An enlarged shoulder **1340** at the front end **1305** of post **1300** extends inside the coupler **1200**. The enlarged shoulder **1340** includes contacting portion **1310,** collar portion **1320**, and rearward facing annular surface **1330**. Collar portion **1320** allows coupler **1200** to rotate by means of a clearance fit with through bore **1220** of coupler **1200.** Rearward facing annular surface **1330** limits forward axial movement of coupler **1200** by engaging forward facing surface 1216 of lip 1215.

[00100] Contacting portion **1310** contacts coupler **1200**. Contacting portion **1310** may contact the coupler **1200** at one or more of lip **1215**, forward of the lip **1215** and rearward of the lip **1200**. For example, as shown in **Figure 27**, contacting portion **1310** contacts the forward facing surface **1216** of lip **1215** of coupler **1200**. In this way, contacting portion **1310** establishes an electrically conductive path between post **1300** and coupler **1200** and, thereby, with body **1500.** This facilitates an electrically conductive path from the coaxial cable through the coaxial cable connector **1100** to the equipment connection port or terminal providing an electrical ground and a shield against RF ingress. Elimination of separate continuity member **4000** as illustrated in connector **1000** of **Figure 1** improves DC contact resistance by eliminating mechanical and electrical interfaces between components and further improves DC contact resistance by removing a component made from a material having higher electrical resistance properties.

[00101] Further, the contacting portion **1310** remains in electrical and mechanical contact with coupler **1200** independent of the tightness of the coaxial cable connector **1100** on the appliance equipment connection port. In other words, the contacting portion **1310** is integral

to the electrically conductive path established between the post **1300** the coupler **1200** and body **1500** even when the coaxial cable connector is loosened or disconnected from the appliance equipment connection port. Additionally, contacting portion **1310** may be formed to contactedly fit with the coupler by pre-forming it during a fabrication process.

[00102] **Figure 28** is a side schematic view of post **1300** showing contacting portion **1310** at least partially circumscribing post **1300**. In this view contacting portion **1310** has not been formed. **Figure 29** is a front schematic view of post **1300** shown in **Figure 28**. **Figure 30** is a side schematic view of post **1300** where contacting portion **1310** has been formed such that edge **1311** extends at least partially beyond rearward facing annular surface **1330**. Alternatively, contacting portion **1310** can be machined such that edge **1311** extends at least partially beyond reward facing annular surface **1330**.

[00103] Referring now to **Figures 31, 32**, and **33,** post **1300** is illustrated in a state of partial assembly in body **1500** with contacting portion **1310** in formed condition**.** At the state of assembly illustrated in **Figure 32** contacting portion **1310** passes through the interior contours of coupler **1200.** As post **1300** is further advanced as shown in **Figure 33** contacting portion **1310** contacts forward facing surface **1216** of lip **1215.** Contacting portion **1310** accommodates limited axial movement of coupler **1200** in relation to body **1500** and post **1300**. The flexible and resilient nature of contacting portion **1310** permits coupler **1200** to be easily rotated and yet maintain a reliable conductive path. The co-planar or near co-planar engagement between contacting portion **1310** and forward facing lip **1215** provide improved coupling nut rotation. Additionally, although not shown in **Figures 31, 32 and 33**, contacting portion **1310** may contact any other portion of the coupler **1200** including, without limitation, the rearward facing surface **1217** or intermediate surface **1218**.

[00104] Many modifications and other embodiments set forth herein will come to mind to one skilled in the art to which the embodiments pertain having the benefit of the teachings presented in the foregoing descriptions and the associated drawings. Therefore, it is to be understood that the description and claims are not to be limited to the specific embodiments disclosed and that modifications and other embodiments are intended to be included within the scope of the appended claims

[00105] It is intended that the embodiments cover the modifications and variations of the embodiments provided they come within the scope of the appended claims and their

equivalents. Although specific terms are employed herein, they are used in a generic and descriptive sense only and not for purposes of limitation.

What is claimed is:

1. A coaxial cable connector, the connector comprising a post and a coupler wherein:

the post is adapted to receive an end of a coaxial cable;

the post comprises a front end, an enlarged shoulder at the front end, and a plurality of contacting portions;

the contacting portions are of monolithic construction with the post, collectively circumscribe the enlarged shoulder at the front end of the post, and comprise forward and rearward facing surfaces that extend in a generally perpendicular orientation with respect to a longitudinal axis of the connector;

the coupler comprises an internally projecting lip;

the lip comprises a forward facing surface, a rearward facing surface, and an intermediate portion;

the forward facing surface of the lip extends in a generally perpendicular orientation with respect to the longitudinal axis of the connector;

the rearward facing surfaces of the contacting portions contact the forward facing surface of the lip of the coupler in a co-planar engagement; and

the contacting portions are configured to maintain the generally perpendicular orientation while in contact with the forward facing surface of the lip of the coupler and facilitate electrical continuity between the post and the coupler to provide RF shielding.

2. The coaxial cable connector of claim 1, wherein:

the enlarged shoulder comprises a collar portion a rearward facing annular surface; and

the contacting portions circumscribe the collar portion and extend from the collar portion in a generally perpendicular orientation with respect to the longitudinal axis of the connector.

3. The coaxial cable connector of claim 1, wherein:

the enlarged shoulder comprises a collar portion a rearward facing annular surface; and

the rearward facing annular surface of the enlarged shoulder is engaged to the forward facing surface of the lip of the coupler when the post is assembled to the coupler.

Date Reçue/Date Received 2021-06-23

4. The coaxial cable connector of claim 1, wherein the contacting portions form to the contours of the coupler when the post is assembled to the coupler.

5. The coaxial cable connector of claim 1, wherein the contacting portions facilitate electrical continuity between the post and the coupler regardless of the tightness of the coupling of the connector.

6. The coaxial cable connector of claim 1, wherein the contacting portions facilitate electrical continuity between the post and the coupler when the coaxial cable connector is loosened or disconnected.

7. The coaxial cable connector of claim 1, further comprising a body, wherein the post is press-fit to the body.

8. The coaxial cable connector of claim 1, wherein the contacting portion functions as an integral shield to provide a stable ground path for and protect against the ingress of RF signals into the coaxial cable connector.

9. A coaxial cable connector, the connector comprising a post and a coupler wherein:

the post is adapted to receive an end of a coaxial cable;

the post comprises a front end, an enlarged shoulder at the front end, and a plurality of contacting portions;

the enlarged shoulder comprises a collar portion defined by a collar portion surface and a rearward facing annular surface,

the contacting portions are of monolithic construction with the post, collectively circumscribe the enlarged shoulder at the front end of the post, extend initially in a generally perpendicular orientation with respect to a longitudinal axis of the connector from the collar portion surface of the enlarged shoulder, and are formed to depart from the initial generally perpendicular orientation such that an edge of the contacting portions extends at least partially beyond the rearward facing annular surface of the enlarged shoulder;

the coupler is rotatably attached to the post comprising an internally projecting lip, adapted to couple the connector;

Date Reçue/Date Received 2021-06-23

the lip comprises a forward facing surface, a rearward facing surface and an intermediate portion; and

the contacting portions are configured to contact the forward facing surface of the lip of the coupler and facilitate electrical continuity between the post and the coupler to provide RF shielding.

10. The coaxial cable connector of claim 9, wherein the contacting portions form to the contours of the coupler when the post is assembled to the coupler.

11. The coaxial cable connector of claim 9, wherein the contacting portions facilitate electrical continuity between the post and the coupler regardless of the tightness of the coupling of the connector.

12. The coaxial cable connector of claim 9, wherein the contacting portions facilitate electrical continuity between the post and the coupler when the coaxial cable connector is loosened or disconnected.

13. The coaxial cable connector of claim 9, further comprising a body, wherein the post is press-fit to the body.

14. The coaxial cable connector of claim 9, wherein the contacting portion functions as an integral shield to provide a stable ground path for and protect against the ingress of RF signals into the coaxial cable connector.

Date Reçue/Date Received 2021-06-23

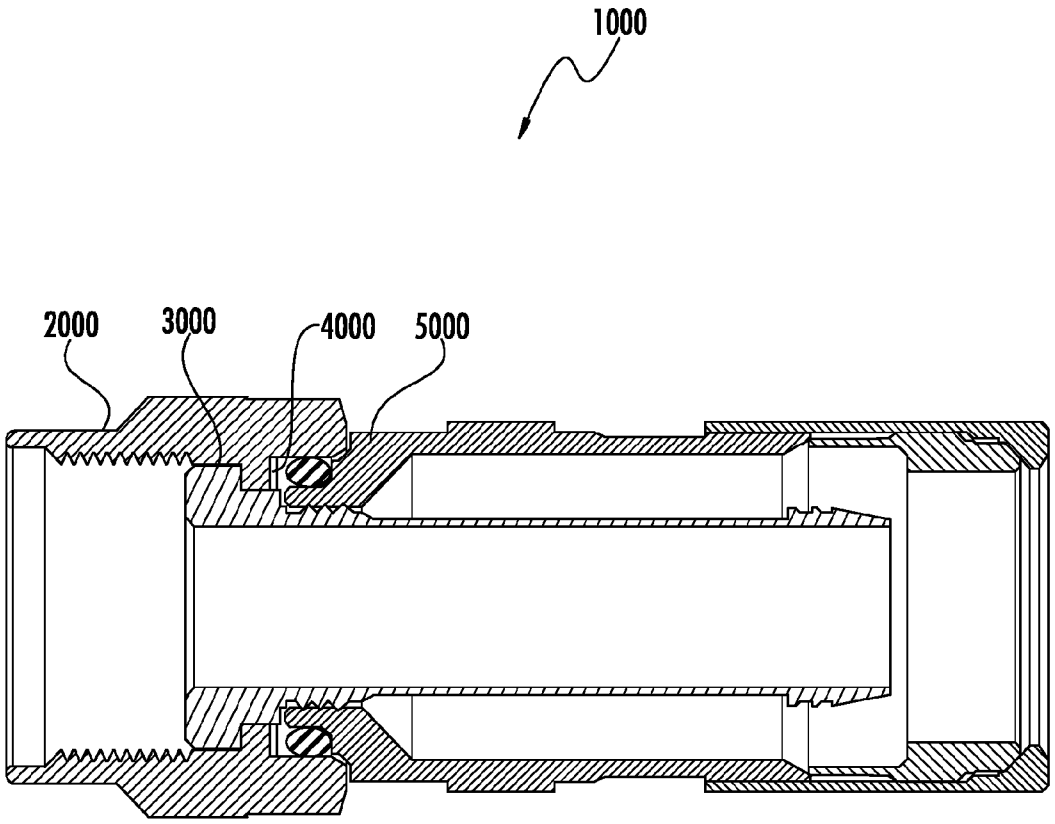

FIG. 1
(PRIOR ART)

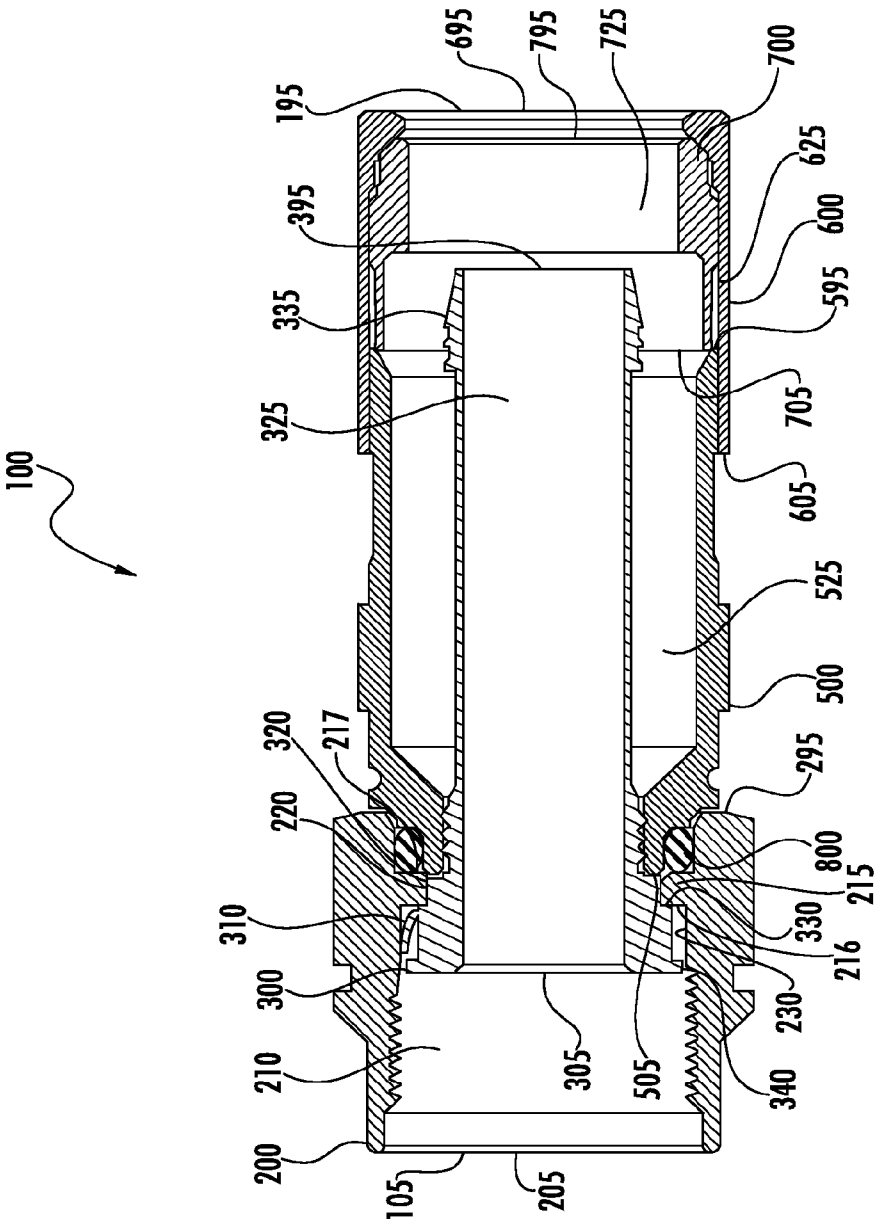
100
695
795
725
700
195
625
395
600
595
335
705
325
605
525
500
320
217
295
220
800
215
310
330
216
300
230
210
305
505
340
200
105
205

FIG. 2

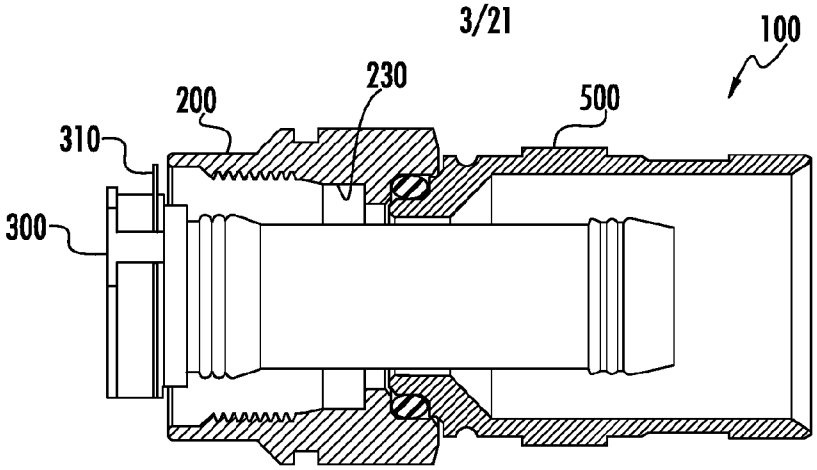

FIG. 3A

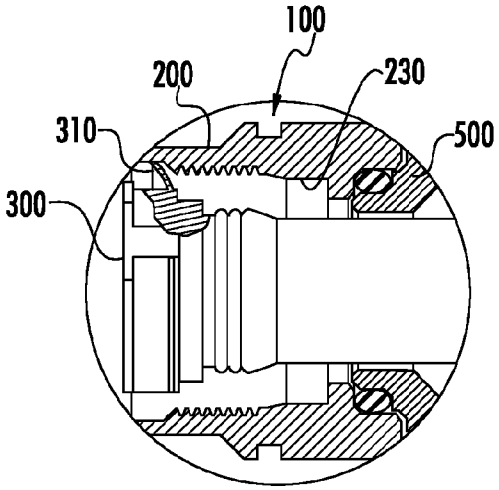

FIG. 3B

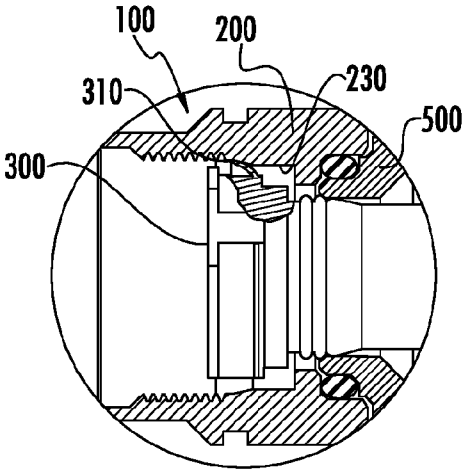

FIG. 3C

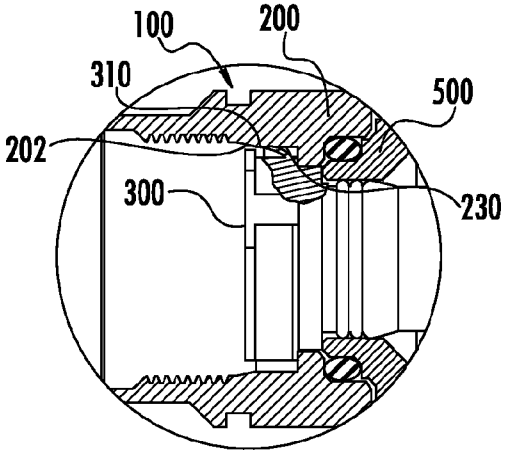

FIG. 3D

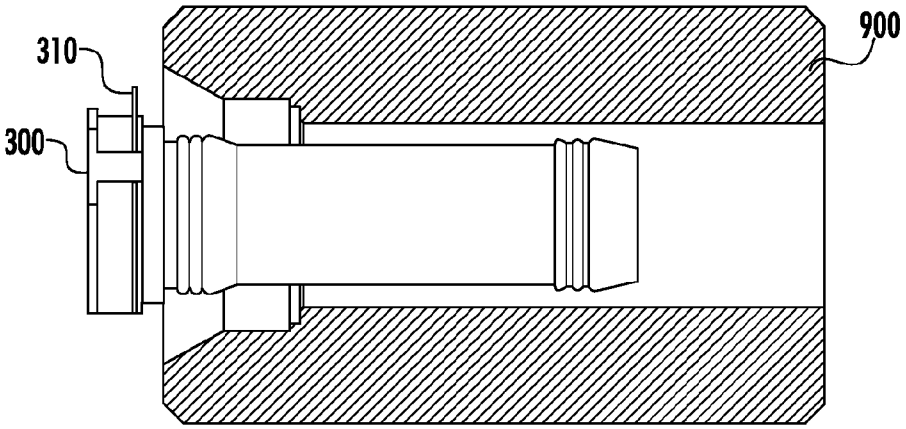

FIG. 4A

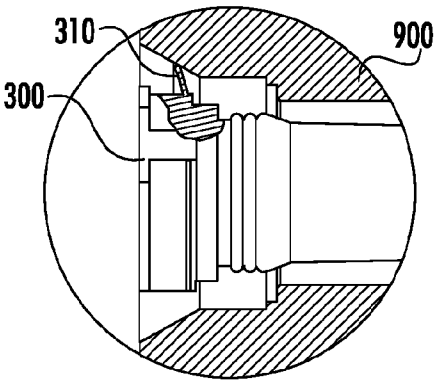

FIG. 4B

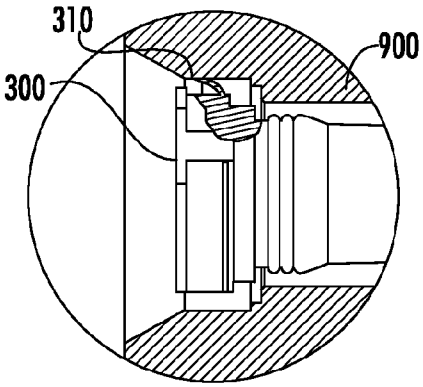

FIG. 4C

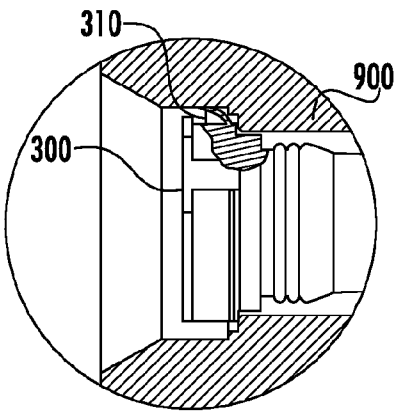

FIG. 4D

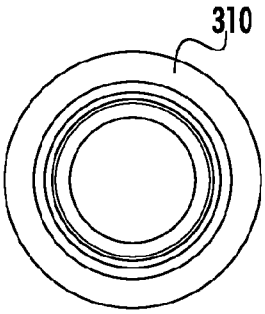

FIG. 5B

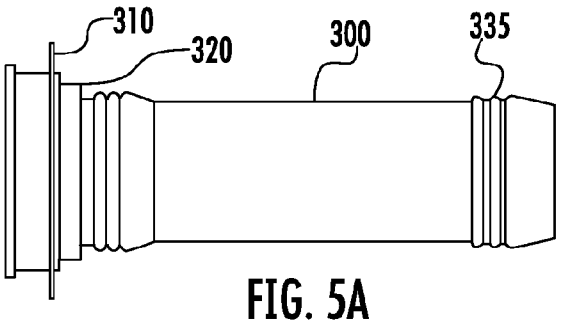

FIG. 5A

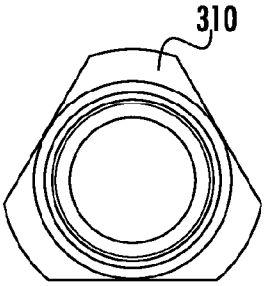

FIG. 5D

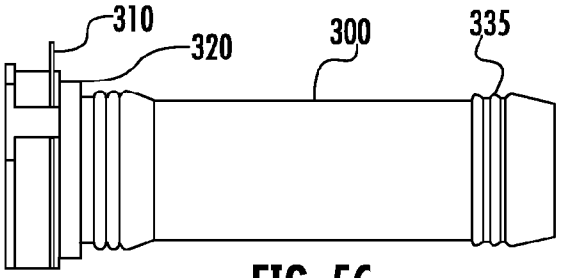

FIG. 5C

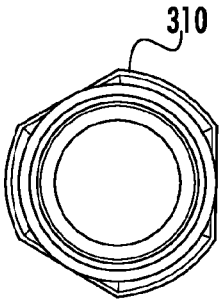

FIG. 5F

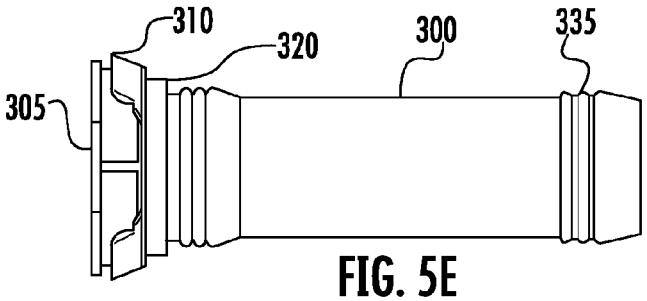

FIG. 5E

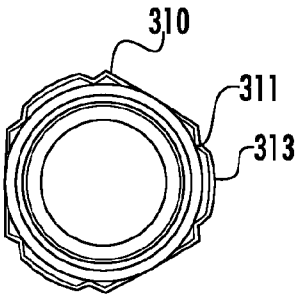

FIG. 5H

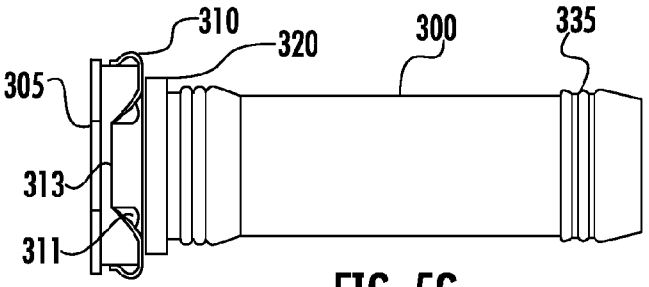

FIG. 5G

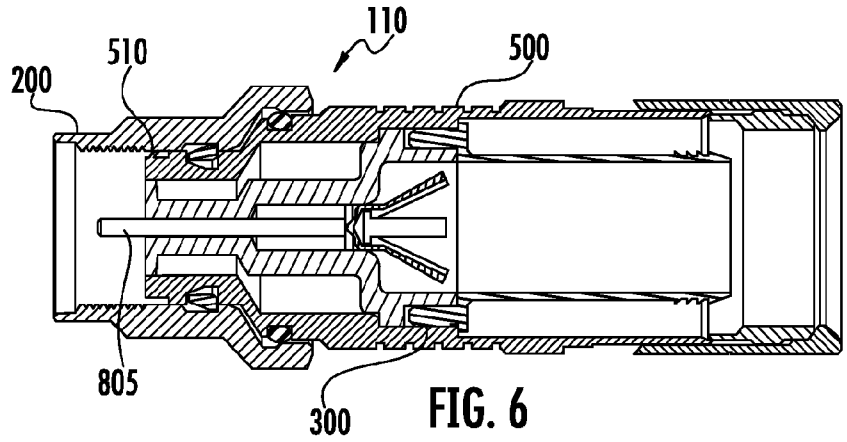

FIG. 6

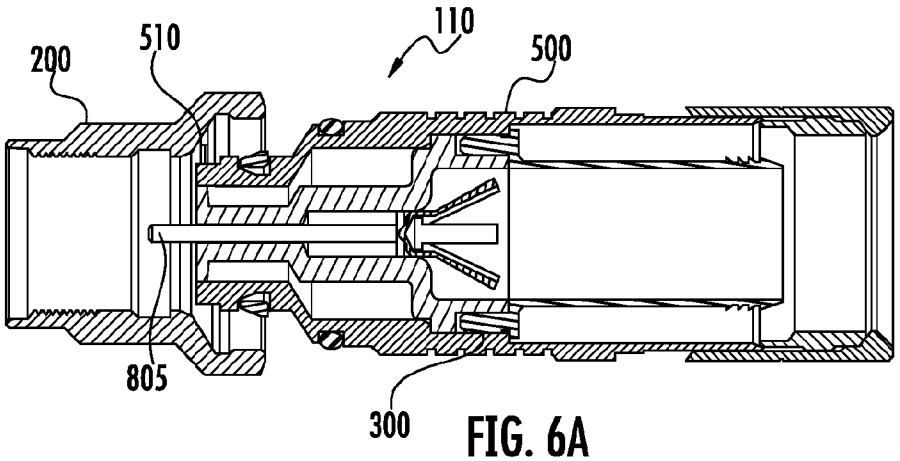

FIG. 6A

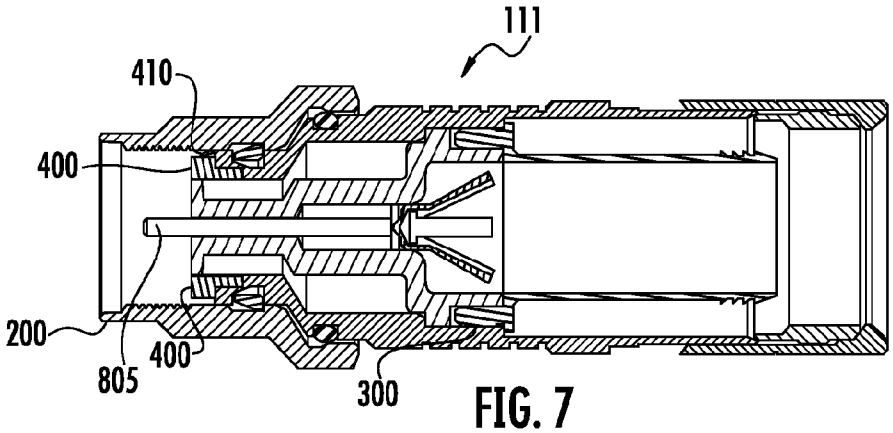

FIG. 7

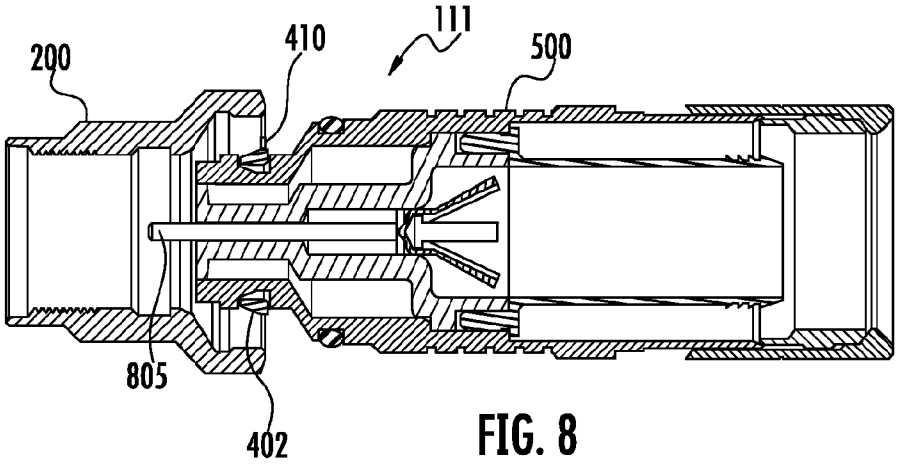

FIG. 8

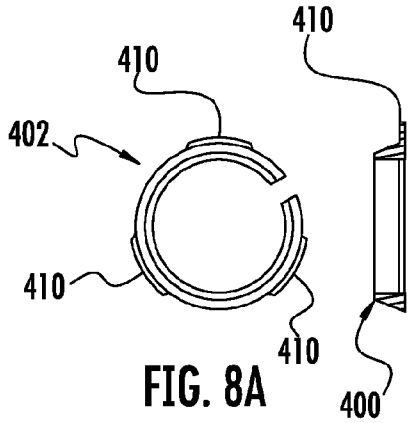

FIG. 8A

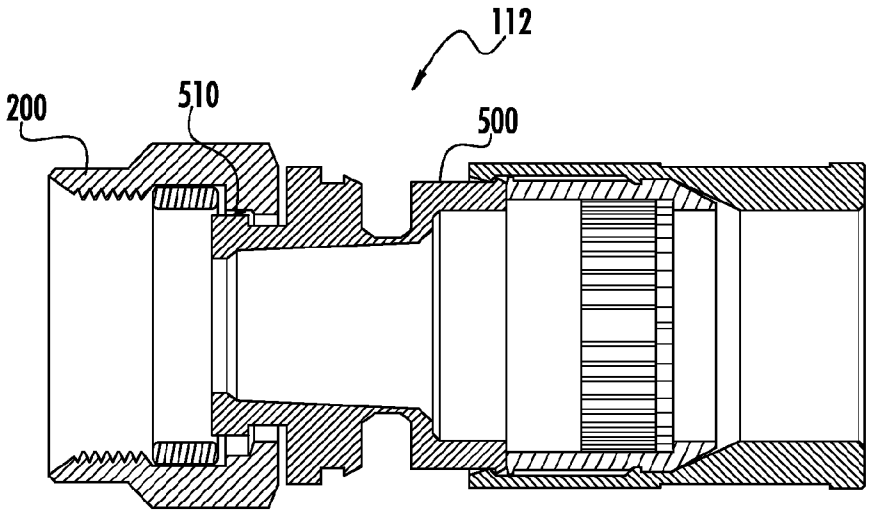

FIG. 9

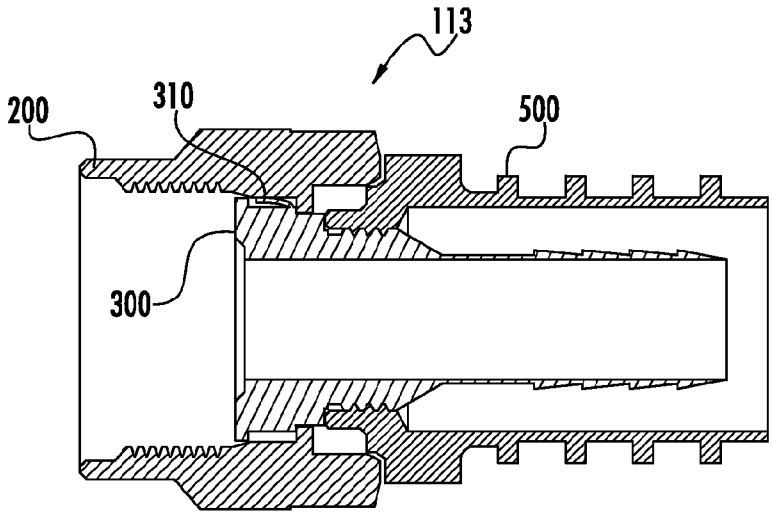

FIG. 10

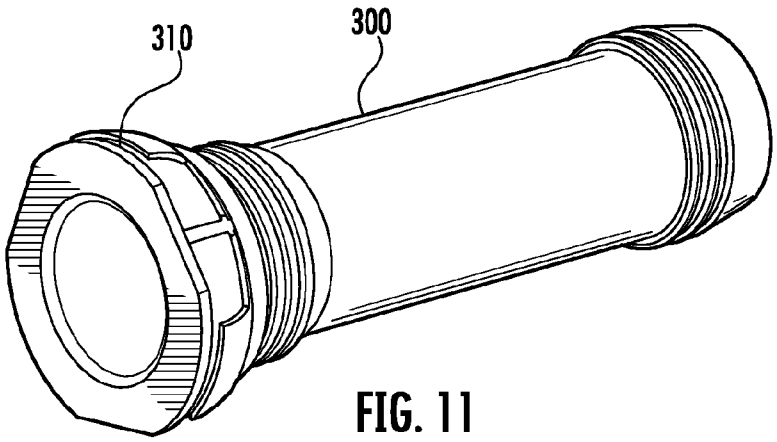

FIG. 11

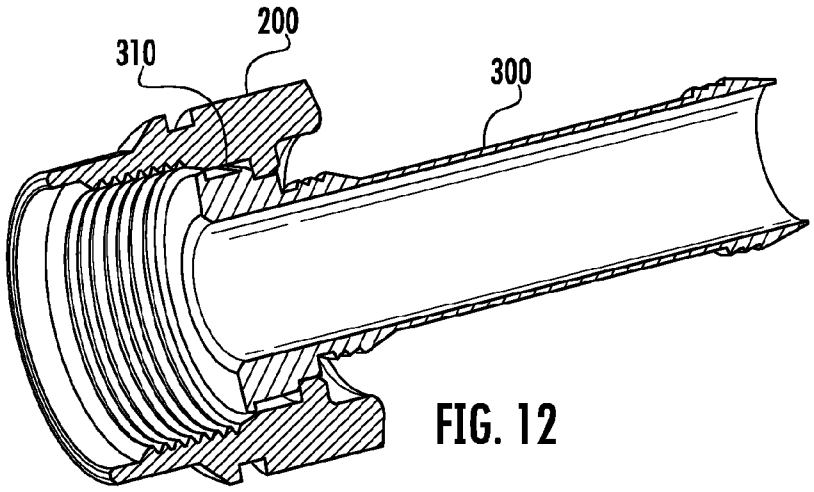

FIG. 12

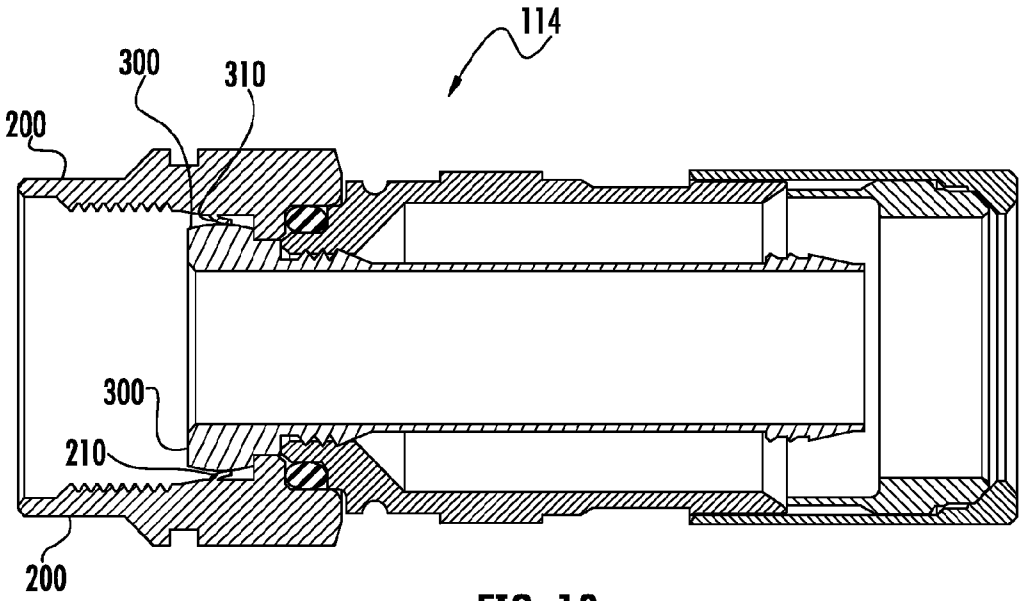

FIG. 13

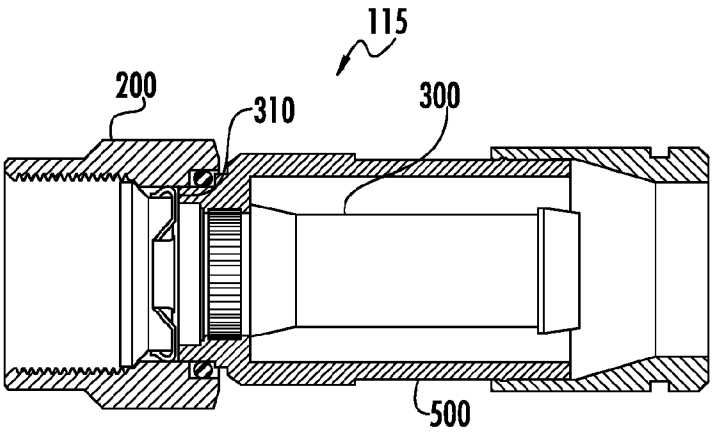

FIG. 14

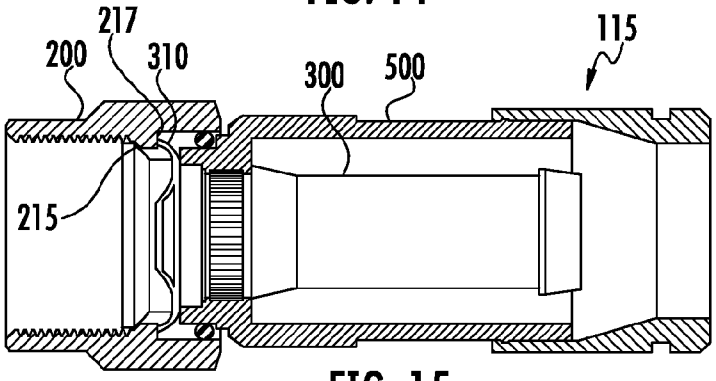

FIG. 15

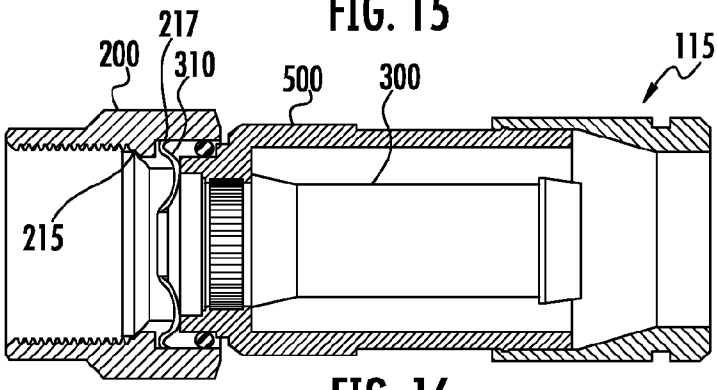

FIG. 16

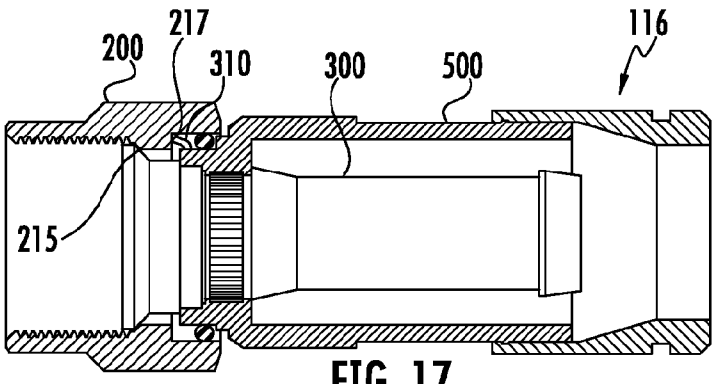

FIG. 17

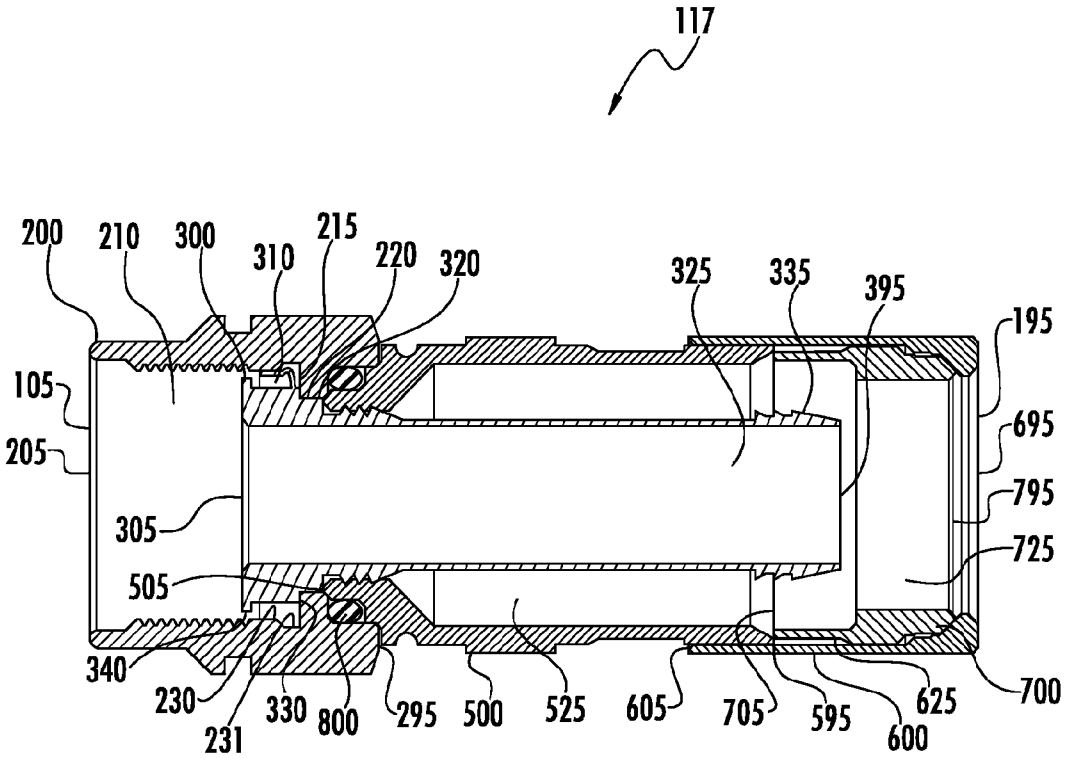
117
200
210
300
310
215
220
320
325
335
395
195
105
205
695
795
305
725
505
340
230
231
330
800
295
500
525
605
705
595
600
625
700

FIG. 18

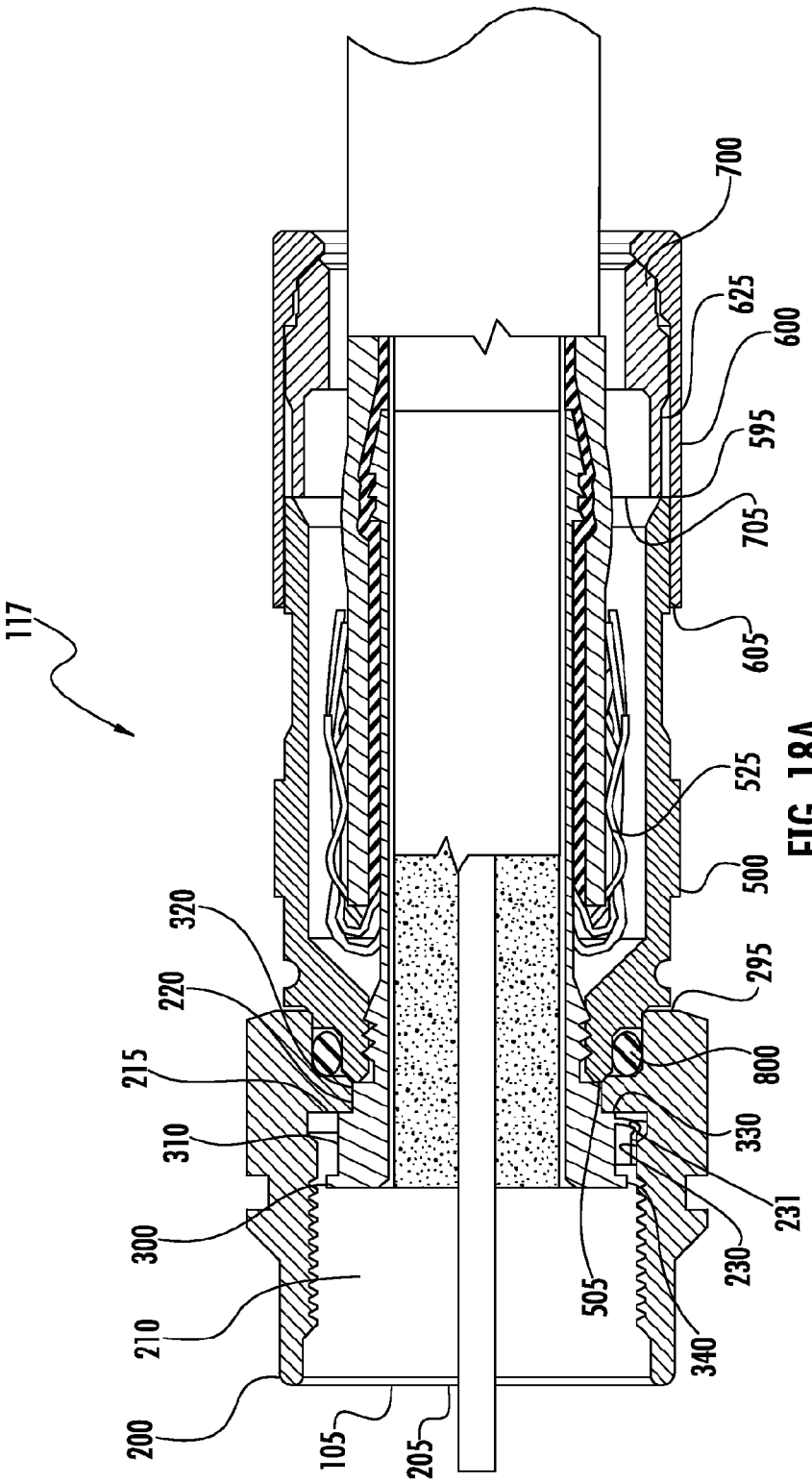
117
700
625
600
595
705
605
525
500
295
800
330
231
230
340
505
320
220
215
310
300
210
200
105
205

FIG. 18A

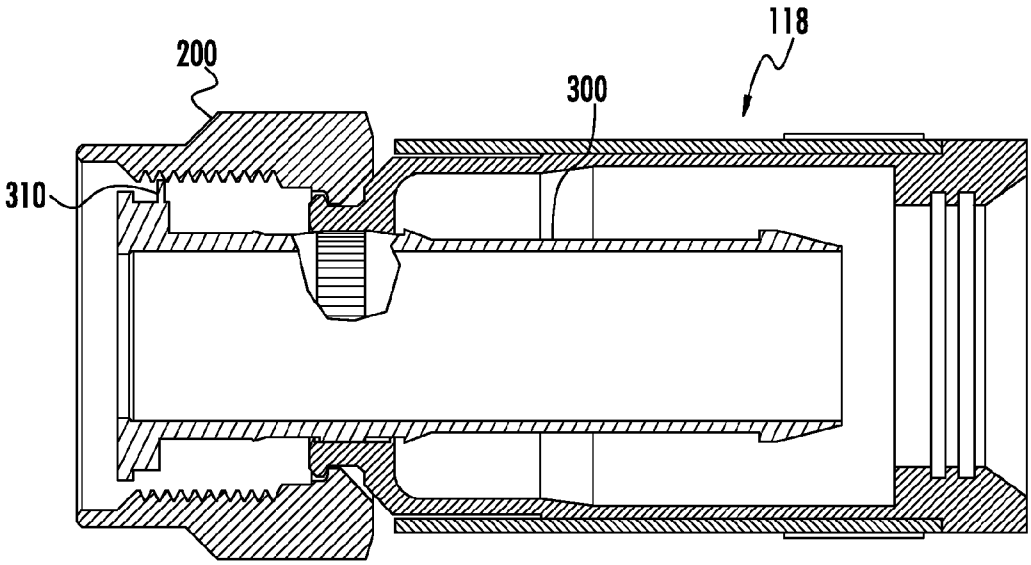

FIG. 19

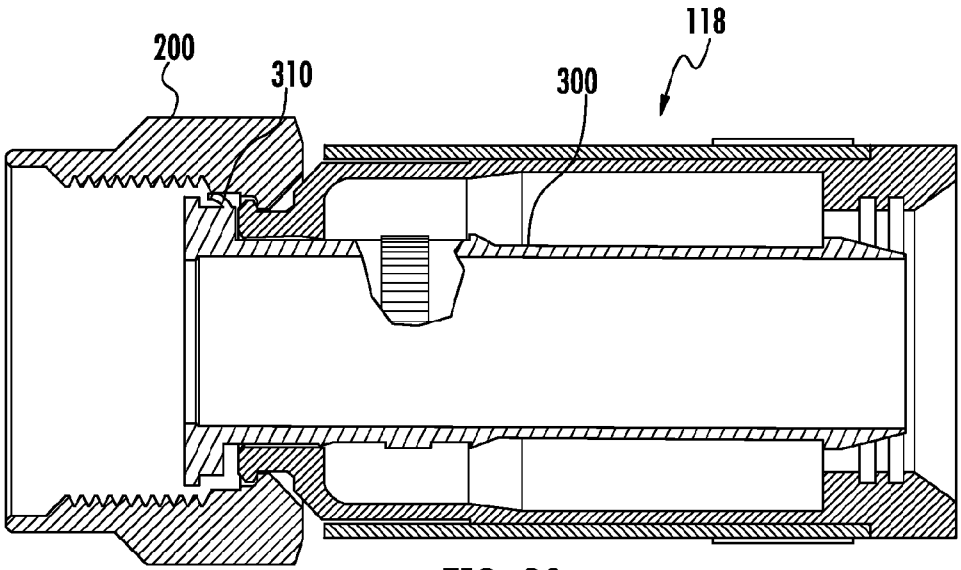

FIG. 20

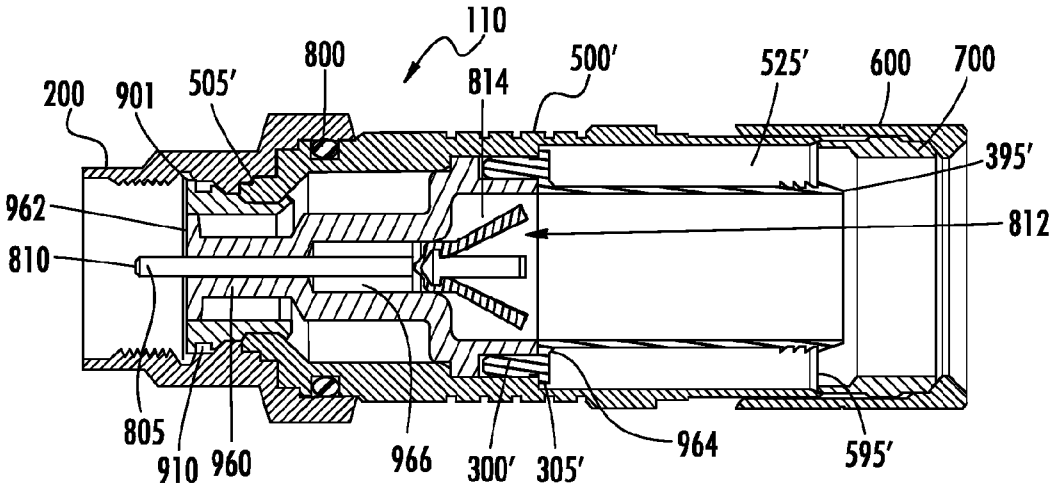
110
800
814
500'
525'
600
700
200
901
505'
395'
962
812
810
805
910
960
966
300'
305'
964
595'

FIG. 21

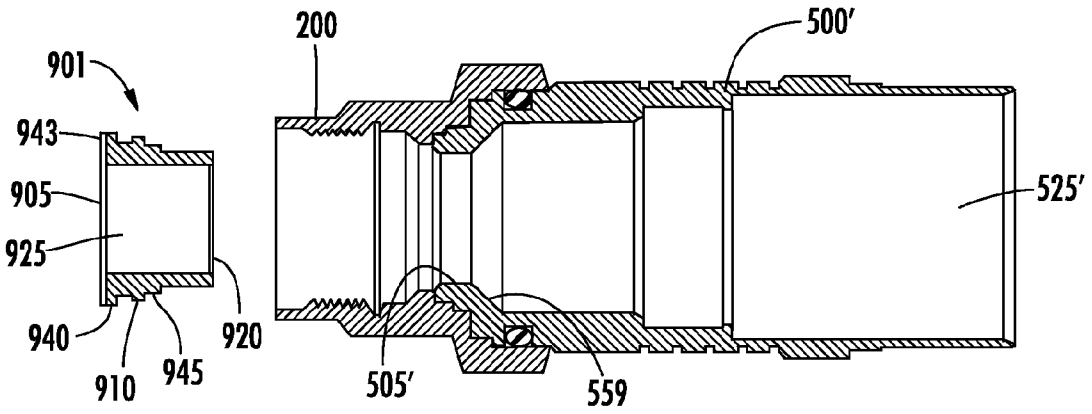
200
500'
901
943
905
525'
925
940
920
910
945
505'
559

FIG. 22

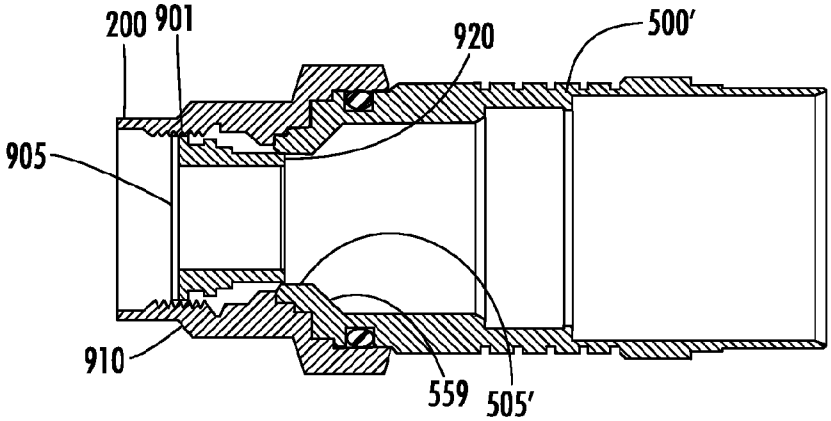

FIG. 23

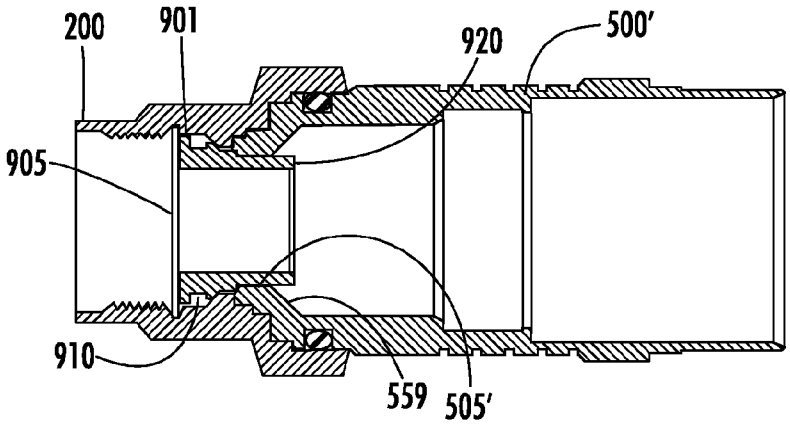

FIG. 24

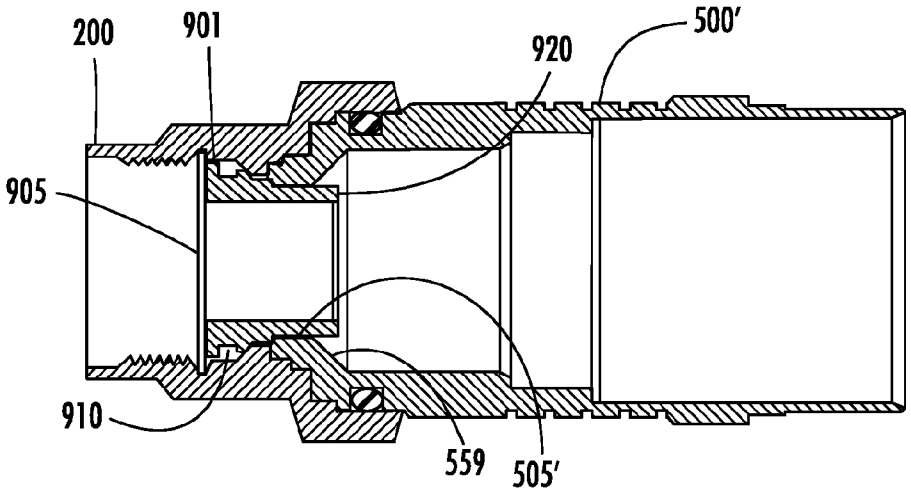

FIG. 25

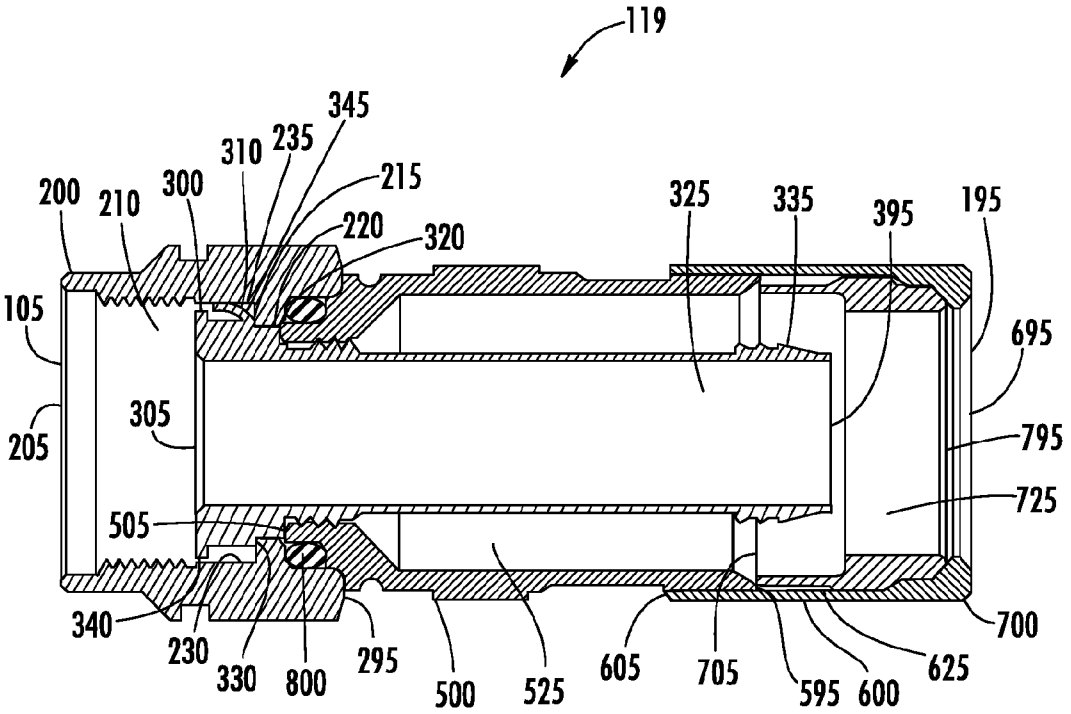
119
345
310
235
215
200
210
300
220
320
325
335
395
195
105
695
305
795
205
725
505
340
230
330
800
295
500
525
605
705
595
600
625
700

FIG. 26

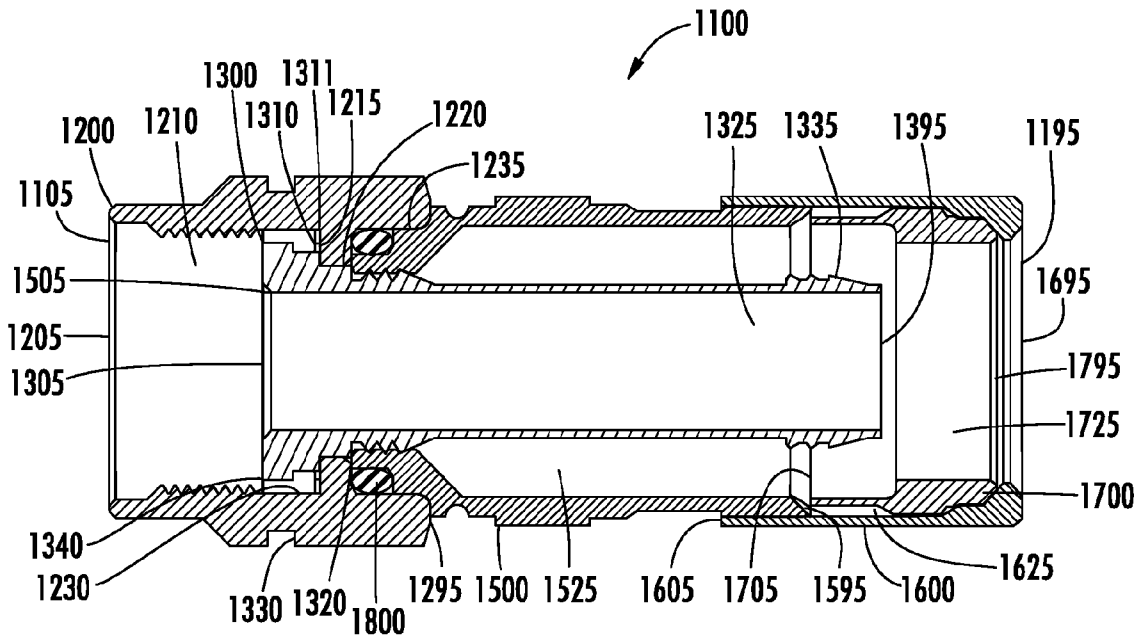
1100
1300
1311
1215
1220
1200
1210
1310
1325
1335
1395
1195
1235
1105
1505
1695
1205
1795
1305
1725
1700
1340
1625
1230
1330
1320
1800
1295
1500
1525
1605
1705
1595
1600

FIG. 27

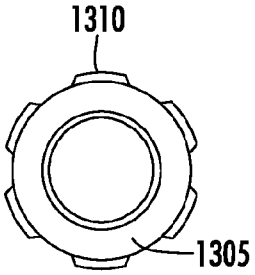

FIG. 29

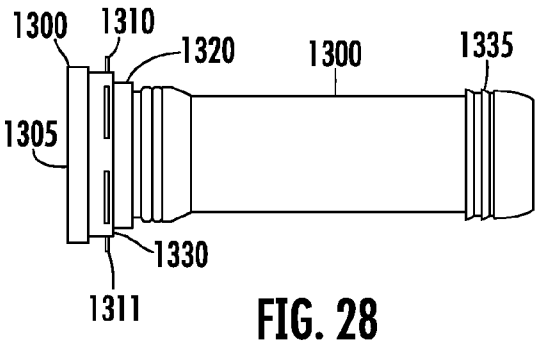

FIG. 28

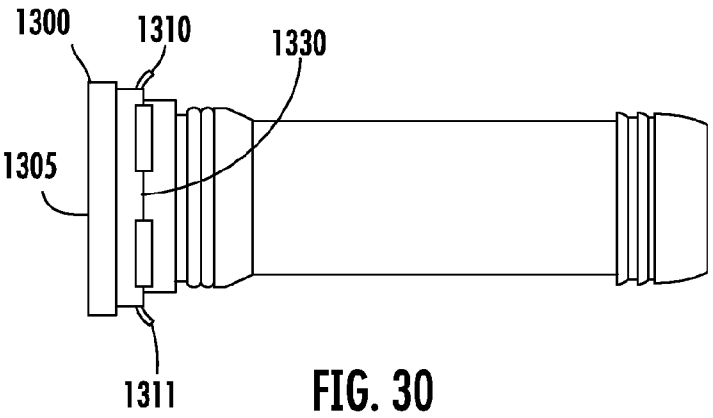

FIG. 30

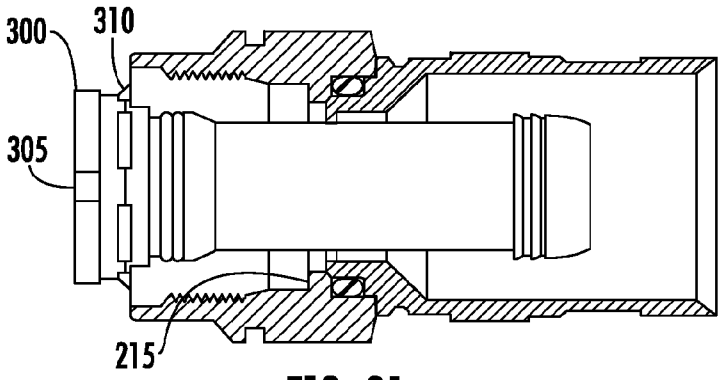

FIG. 31

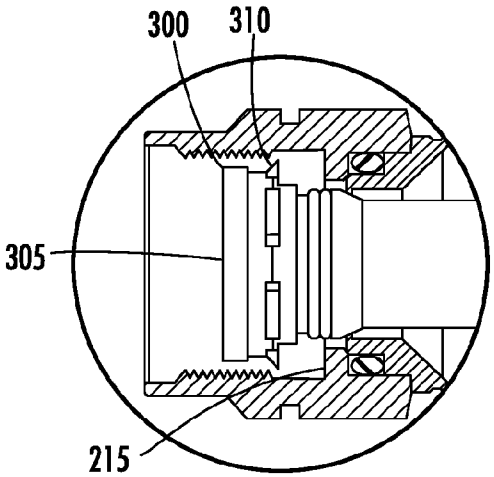

FIG. 32

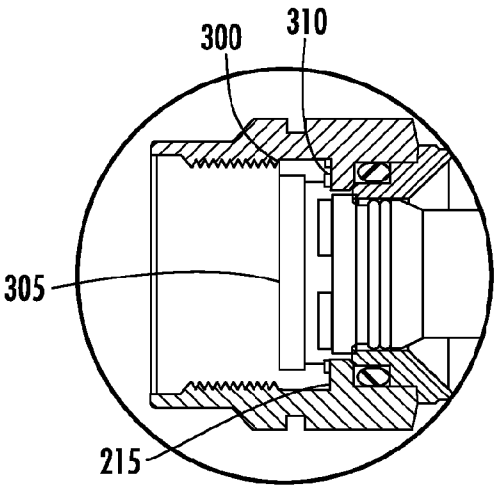

FIG. 33

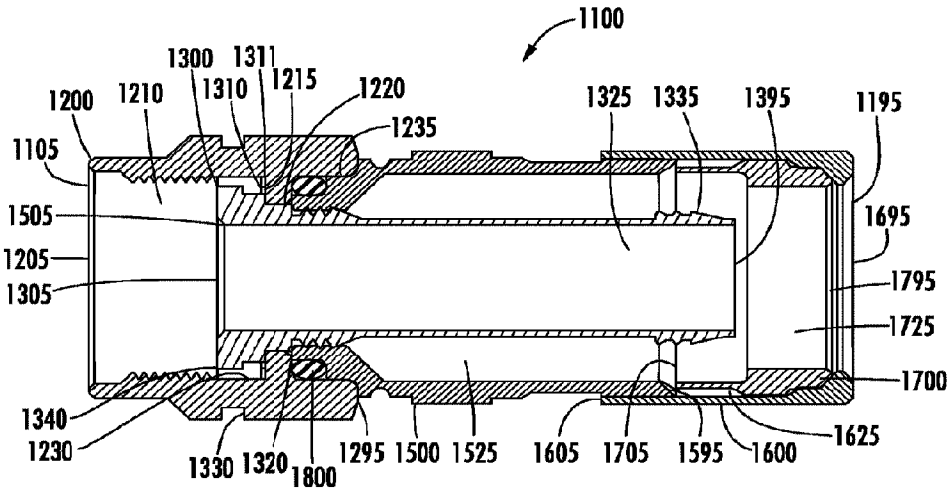
1100
1300
1311
1215
1220
1200
1210
1310
1235
1325
1335
1395
1195
1105
1505
1695
1205
1305
1795
1725
1700
1340
1230
1330
1320
1800
1295
1500
1525
1605
1705
1595
1600
1625