Sept. 14, 1937. W. C. GROENIGER 2,092,757

AUTOMATIC AIR VALVE AND SIPHON BREAKER

Filed April 25, 1936

Fig. 1.

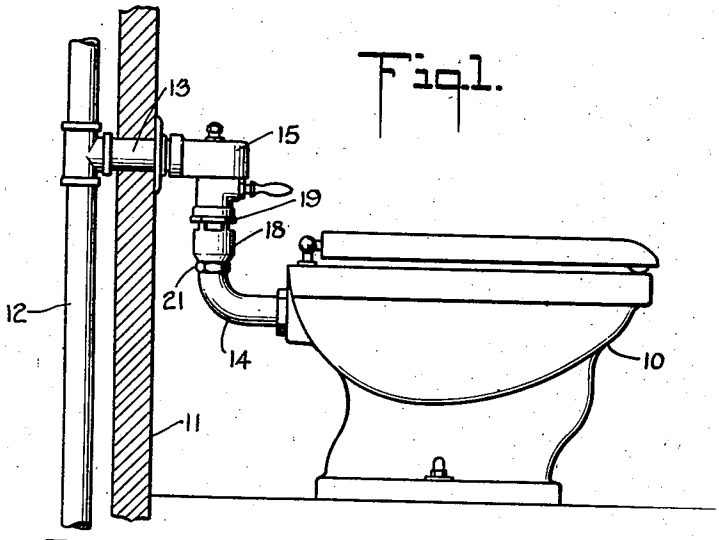

Fig. 2.

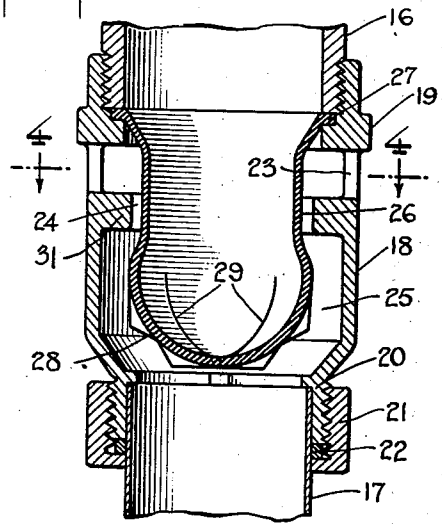

Fig. 3.

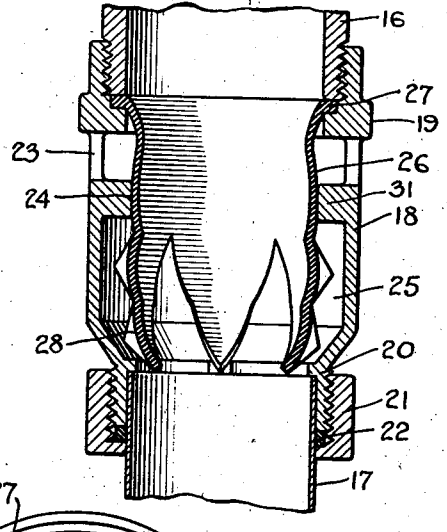

Fig. 4.

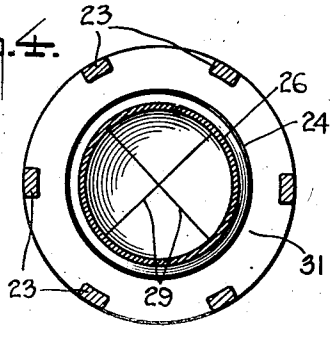

Fig. 5.

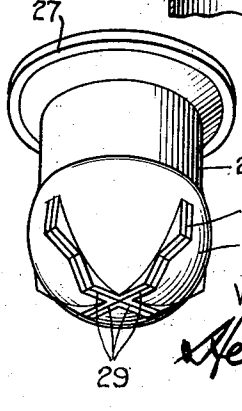

INVENTOR
William C. Groeniger
BY
Henry J. Rooke
HIS ATTORNEY

Patented Sept. 14, 1937

2,092,757

UNITED STATES PATENT OFFICE

2,092,757

AUTOMATIC AIR VALVE AND SIPHON BREAKER

William C. Groeniger, Columbus, Ohio, assignor to John B. Pierce Foundation, New York, N. Y., a corporation of New York

Application April 25, 1936, Serial No. 76,317

6 Claims. (Cl. 277—20)

My present invention relates to valves, and more particularly to an automatic air valve and siphon breaker.

In water supply systems, and particularly in water supply systems wherein a single source of supply is utilized both as a source of potable water and as a source of water for flushing purposes, there is always the danger that a cross-connection may be built up between a flushing receptacle, or a receptacle utilized for other than potable water, and the main supply line. Such cross-connection may be built up either under normal or abnormal conditions of use of the system, with the result that contaminated water from a flushing receptacle may be drawn into the main supply pipe, and afterwards distributed as potable water. Serious epidemics have resulted from such cross-connections in the past, and my present invention is designed to obviate this defect in water supply systems.

In my present invention I have designed a fitting adapted to be associated with the supply feeder leading from the main supply source to a flushing receptacle. It may be incorporated as an integral part of the control member usually arranged in such pipe; it may be made auxiliary thereto and interposed between the control device and the flush receptacle; or it may be disposed in any other suitable position between the main supply pipe and the water outlet.

In my invention I have utilized, as an essential element, a resilient closure member which will permit passage of water therethrough in one direction only. Preferably, I associate such closure member with a fitting which, when no water in flowing through the resilient closure referred to, permits air to flow from the outer atmosphere into the fitting around the resilient closure member and thus constitutes an automatically operating air break between the source of water supply and the flushing receptacle. Such fitting performs a three-fold purpose; it acts as a container for the resilient closure member above referred to; it permits flow of atmospheric air into the flushing receptacle and thus constitutes a break point in a connecting pipe between a flushing receptacle and a source of water supply; and it permits the seepage of water outward to the atmosphere and into view of those interested in or charged with the care of the plumbing device, thus acting as a policeman for the complete device.

A feature of my invention therefore, is an improved air valve for plumbing systems.

A feature of my invention is an improved siphon breaker for feed lines connecting a main source of water supply and a receiving receptacle.

Other features and novel details of a structure embodying my device will appear as the description of the invention progresses.

In the accompanying drawing illustrating one form of my invention:

Fig. 1 is a side elevation of a flushing receptacle connected to a main supply pipe, and with my invention interposed between the same;

Fig. 2 is an enlarged sectional view of my invention with the parts thereof shown in normal, or inoperative position;

Fig. 3 is a view similar to Fig. 2, but showing the parts in their operative position to allow the passage of water therethrough in one direction only;

Fig. 4 represents a horizontal section on the line 4—4 of Fig. 2, and

Fig. 5 is a perspective view of the resilient valve member shown in closed and open positions in Figs. 2 and 3, respectively.

Referring to the drawing, there is shown a flushing receptacle 10 in position adjacent to a wall 11 of a room. Behind the wall is located the usual riser 12 of a water supply system, which serves to supply water both for potable and flushing purposes to various receptacles located in the house or other building of which the wall 11 forms a part. The flushing receptacle 10 is connected with the riser 12 through the pipe 13, and elbow 14, and has the usual automatic flush valve 15 interposed between the pipe 13 and elbow 14. This is the usual and ordinary construction and arrangement of parts whereby measured quantities of water may be drawn from the riser 12 and delivered to the flushing receptacle 10 for flushing purposes.

As thus constructed it is apparent that under abnormal conditions of operation, and in certain circumstances under normal conditions of operation, the bowl of the flushing receptacle 10, the elbow 14 and pipe 13 may be made the short leg of a siphon, of which the riser 12 forms the long leg. It is possible, therefore, for water which had been previously drawn from the riser 12, and deposited in the flushing receptacle 10, to be drawn from the receptacle 10 back into the riser 12, and afterwards delivered from such riser 12 to a faucet or tap where potable water is being withdrawn from the system. The water in the flushing receptacle 10 may or may not be contaminated, but ordinarily is, and therefore it is important that any water drawn from the riser

12 and delivered to the flushing receptacle 10 never return to the riser 12.

In carrying out my invention, I have associated with the connection between the riser 12 and the flushing receptacle 10, and preferably between the automatic flush valve 15 and the elbow 14, a fitting which will break any air lock in the said connection, and positively prevent the formation of a closed short siphon leg from the flushing receptacle 10 to the riser 12.

Such fitting is shown specifically in Figs. 2 and 3 wherein 16 designates a downwardly extending threaded portion of the flush valve 15, and 17 designates the upper end of the elbow 14. The portions 16 and 17 are separated from each other, and therefore I screw onto the threaded end 16 a hollow body member 18, preferably cylindrical in form, provided at its upper end with a noncircular portion 19 to receive a wrench for screwing the same onto the threaded end 16 of the flush valve 15. The lower end of the cylindrical hollow member 18 is externally threaded, as at 20, to receive a packing nut 21. The interior of the threaded end 20 is machined to receive, as a relatively close fit, the outer cylindrical end 17 of the elbow 14.

Between the outer or lower end of the packing nut 21 and the end of the threaded portion 20 of the member 18 is resilient packing material 22 which, when the elements are in the position shown in Fig. 2, is compressed by screwing the packing nut 21 onto the threaded end 20, to thereby maintain a water tight joint between the end 17 of the elbow 14 and the cylindrical body member 18.

The main portion of the body member 18 is spaced apart from the portion which screws onto the end 16 of the flush valve 15 by a plurality of members 23 spaced about the periphery of the body member 18, as shown in Fig. 4. This main portion of the body member 18 is provided with an inwardly extending annular member 31 defining a cylindrical valve seat 24. The opening through the annular member 31 forms a passage leading into a chamber 25 formed in the member 18.

Referring to Fig. 5 there is shown a resilient valve member comprising a tubular body portion 26 having at its upper end an upwardly and laterally extending flange 27, and at its other end a substantially ball-like split-ball valve 28. The ball valve 28 is provided with a plurality of slits 29 extending through the material of the ball and the adjacent edges of such slits 29 are reinforced by lips 30. Such lips 30 are also of resilient material and integral with the ball valve 28.

The structure shown in Fig. 5 is adapted to be positioned within the body member 18 and to be maintained in position therein by the gripping of the flange 27 between the lower end of the threaded portion 16 of the flush valve 15 and the upper end of the body member 18.

Fig. 2 shows the complete assembly of my invention in the normal or non-operative position. In this position air may pass freely through the spaces, i. e. ports, between the members 23, through the opening in the cylindrical valve seat 24, and down through the elbow 14 into the receptacle 10. Under these conditions the lips 30 of the slits 29 are in engagement with each other and no air, and no water, can pass upwardly from the elbow 14 into the threaded member 16.

When the device is operating normally and water is flowing from the riser 12 through the flush valve 15 and into the receptacle 10, such water flow through the ball valve 28 will distend the tubular body portion 26 thereof, as shown in Fig. 3, and the portions of the ball valve 28, between the slits 29, will assume the position shown in Fig. 3. This will provide a free passage for the water from the threaded member 16 into the upper end 17 of the elbow 14. Also the distending of the tubular body portion 26 of the ball valve 28 will engage with the cylindrical valve seat 24 and thus air will be prevented from flowing from the outer atmosphere into the chamber 25, and thence into the receptacle 10 or upwardly into the threaded member 16.

Should a back pressure be built up in the riser 12, as by reason of an excess of water being drawn therefrom at a point or points below the lateral pipe 13, the only effect thereof will be to tightly close the slits 29, and, therefore, no water can be drawn backward through the lateral pipe 13 into the riser 12.

Should a back pressure exist in the riser 12, as above described, and if, at the same time, the ball valve fails to function properly, i. e. the slits 29 fail to close entirely, air will flow through the annular member 24 around the ball valve and through the slits 29, thus preventing the formation of a siphon, and preventing water which has passed through the ball valve from returning to the riser 12.

By the use of the device forming the subject matter of my present invention, that portion of the piping system from the riser 12 to the receptacle 10 can never be converted into the short leg of a siphon. When the ball valve of my invention is functioning normally, it positively prevents the return, to the riser, of water that has passed therethrough. When the ball valve is not functioning properly, it permits air to pass therethrough, preventing the establishment of a siphon, and thus positively prevents the return, to the riser, of water that has passed therethrough.

Whereas I have described my invention with reference to specific forms thereof, it will be understood that many changes and modifications may be made without departing from the spirit of the invention.

I claim:

1. In an improved automatic air valve the combination of a body member, a passageway extending therethrough, means for connecting said body member between a source of fluid supply and a receiving receptacle, a valve seat formed in said body member, and a resilient valve member normally completely closing the said passage way, and opening under pressure to permit passage of fluid from the source of fluid supply to the receiving receptacle, and simultaneously expanding to engage with the valve seat in the body member.

2. An improved automatic air valve comprising a body member provided with a passage extending longitudinally therethrough, and with means for connecting the body between a source of fluid supply and a receiving receptacle, a valve seat formed in said body, laterally extending passages for connecting the interior of the body with the outer atmosphere, and a resilient member located in the body and provided with a valve at one end thereof and acting to permit flow of fluid through the body in one direction only, and said resilient member, intermediate its ends, distendable on flow of fluid therethrough and engaging with the valve seat in the body to prevent flow of air into the receiving receptacle, said engagement with

the valve seat occurring simultaneously with the flow of fluid through the said valve.

3. An automatic air valve comprising a body provided with a passage extending longitudinally therethrough, and with means for connecting the body between a source of fluid supply and a receiving receptacle, passages extending laterally of said body connecting the longitudinal passage with the outer atmosphere under normal conditions, an inwardly extending annular member defining a cylindrical valve seat formed integral with the body, and a resilient valve member located within the body and normally completely closing the said longitudinal body passage, said resilient valve member permitting the free flow of air through the lateral passages into the interior of the body in the normal position of such resilient valve member, the intermediate portion of said valve member distending and engaging the inwardly extending cylindrical valve seat on passage of fluid from the source of fluid supply through the body to the receiving receptacle for preventing flow of air to the interior of the body and flow of fluid from the body through the lateral passages.

4. In a valve, the combination of an expansible valve member normally closing the outlet of a flow passage, a valve seat proximate the valve member and extending substantially coextensively with the outer periphery thereof, and passage means defined between said expansible valve member and said valve seat, flow through said flow-passage effecting expansion of the valve member against the valve seat for closing said passage means.

5. A valve as recited in claim 4 wherein the expansible valve member comprises an elongated hollow body of resilient material fitted at one end to, and communicating thereat with, the outlet of the flow-passage, and having its free end of partial ball formation split to allow expansion thereof under conditions of flow therethrough, and wherein the valve seat surrounds an intermediate portion of the elongated hollow body, said intermediate portion expanding under conditions of flow therethrough and seating against said surrounding valve seat.

6. In a valve, a valve body having a flow-passage therethrough, ports in the walls of the valve body communicating with the outside atmosphere, valve seating means dividing the ported portion of the valve body from the unported portion, and a valve member normally closing the said flow-passage, said valve member being expansible under conditions of flow therethrough for seating against the valve seating means.

WILLIAM C. GROENIGER.