A. WINTON.

INTERNAL COMBUSTION ENGINE.

APPLICATION FILED DEC. 13, 1912.

1,117,738.

Patented Nov. 17, 1914.

2 SHEETS—SHEET 1.

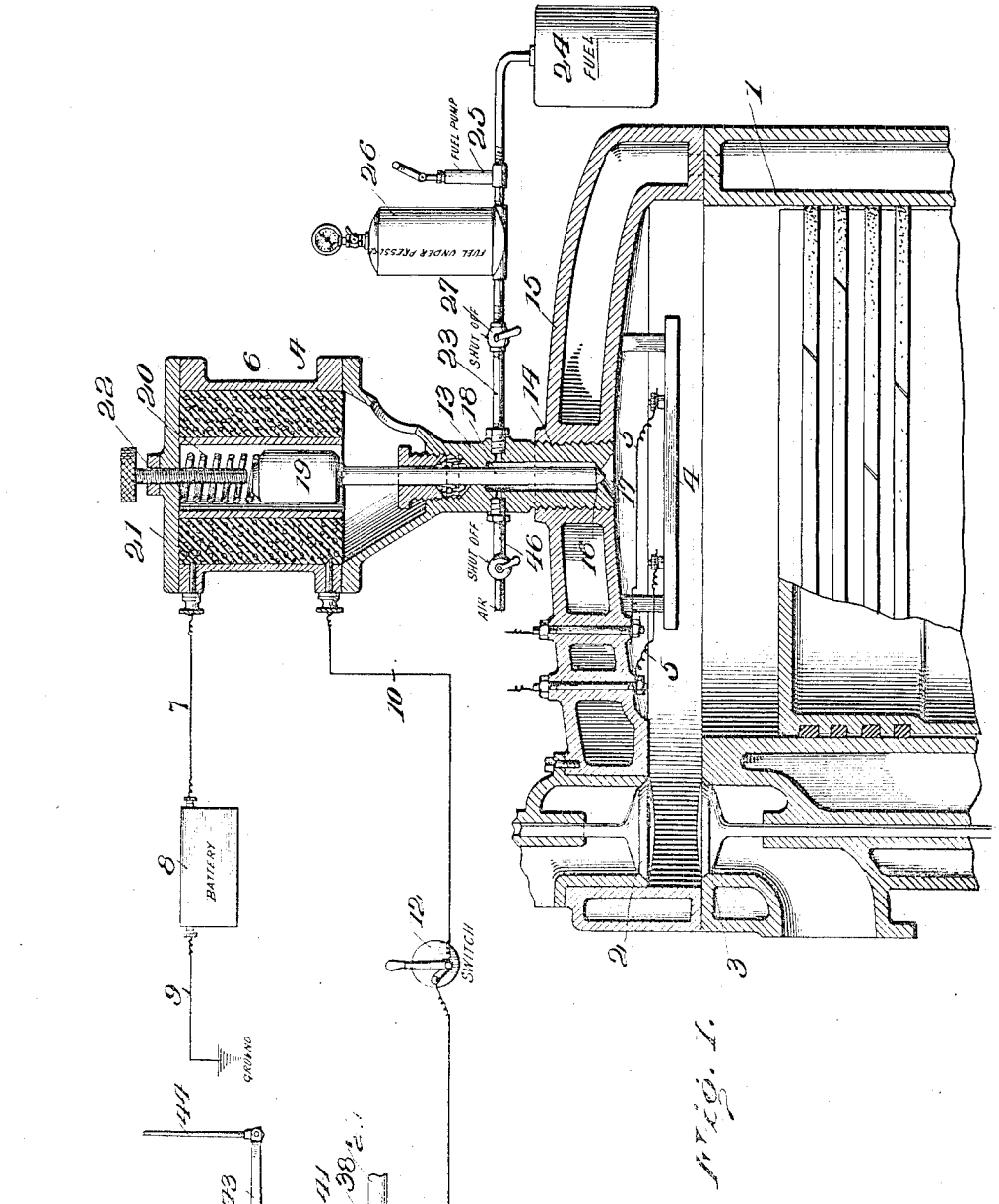

Fig. 1.

Witnesses
L. L. Burket
H. A. Pattison

Inventor
Alexander Winton
By A. L. Pattison
Attorney

A. WINTON.

INTERNAL COMBUSTION ENGINE.

APPLICATION FILED DEC. 13, 1912.

1,117,738.

Patented Nov. 17, 1914.

2 SHEETS—SHEET 2.

Fig. 2.

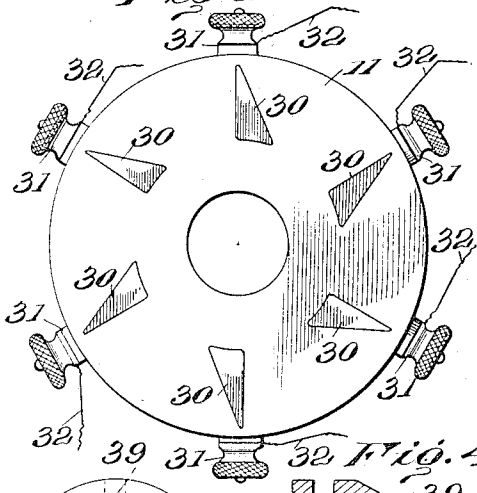

Fig. 3.

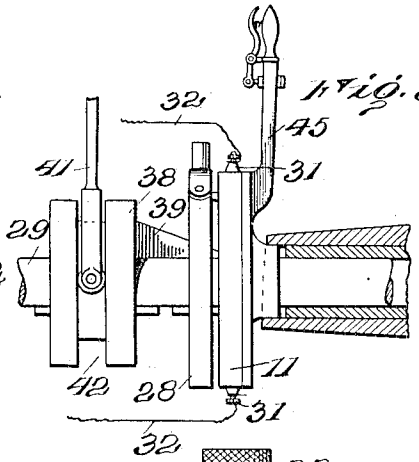

Fig. 4.

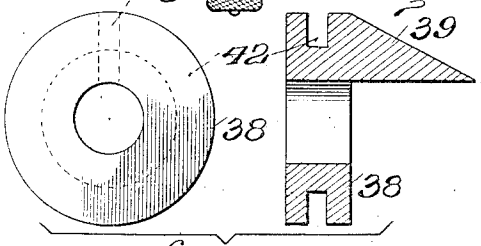

Fig. 5.

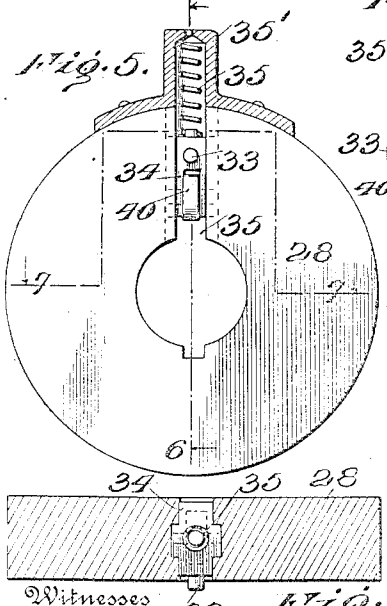

Fig. 6.

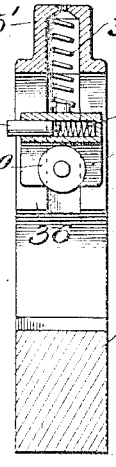

Fig. 8.

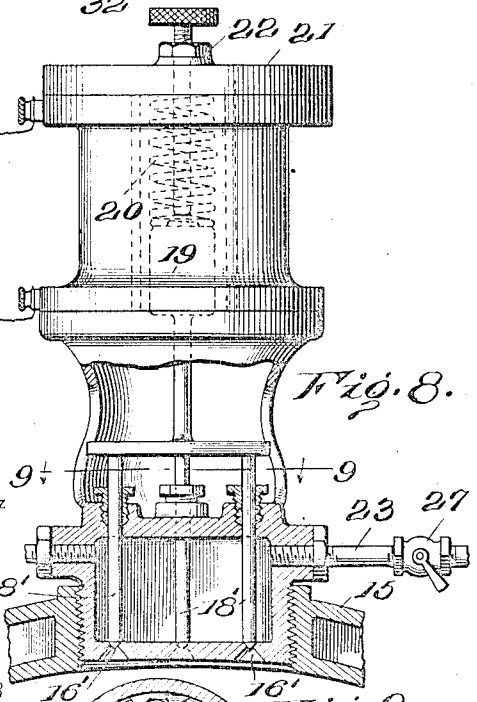

Fig. 9.

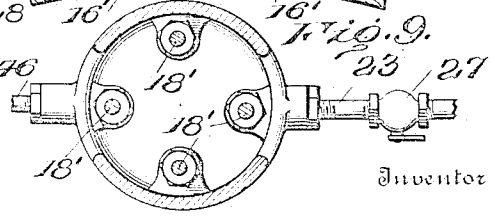

Fig. 7.

Witnesses

L. L. Burket.

H. A. Pattison.

Inventor

Alexander Winton,

By A. S. Pattison

Attorney

UNITED STATES PATENT OFFICE.

ALEXANDER WINTON, OF CLEVELAND, OHIO, ASSIGNOR TO WINTON GAS ENGINE AND MANUFACTURING COMPANY, OF CLEVELAND, OHIO.

INTERNAL-COMBUSTION ENGINE.

1,117,738. Specification of Letters Patent. Patented Nov. 17, 1914.

Application filed December 13, 1913. Serial No. 736,600.

To all whom it may concern:

Be it known that I, ALEXANDER WINTON, a citizen of the United States, residing at Cleveland, in the county of Cuyahoga and State of Ohio, have invented certain new and useful Improvements in Internal-Combustion Engines, of which the following is a specification, reference being had therein to the accompanying drawing.

This invention relates to improvements in internal combustion engines, of that type in which heavy grades of oil are used as a fuel.

The present invention is an improvement upon the construction in my pending application Serial No. 731,000, filed November 12th 1912, and the object of this improvement is to provide electrical means for controlling the admission of the oil or fuel to be vaporized and ignited, and to provide a commutator controlling the electrical device so constructed that the time of the admission of the oil in the cycle of the engine can be controlled, *i. e.*, advance or retard the time of admission in the cycle of the engine, and, furthermore, to so construct the commutator that the amount of oil or fuel admitted can be controlled by the commutator and thus vary the speed and power of the engine.

By means of this improvement all complication, wear and noise of cams is avoided, making the operation of the fuel controlling element or valve noiseless and under complete control through the means of a commutator.

In the accompanying drawings—Figure 1 is a sectional view of an engine cylinder with my invention applied thereto. Fig. 2 is an enlarged face view of the plurality contact member of the commutator. Fig. 3 is a side view of the commutator. Fig. 4 is an end and sectional view of the wedge-shaped member for controlling the position of the contact or rotating member of the commutator. Fig. 5 is a side elevation partly in section of the rotating member of the commutator carrying the adjustable contact. Fig. 6 is a sectional view of Fig. 5 on the line 6—6. Fig. 7 is a sectional view on the line 7—7 of Fig. 5. Fig. 8 is a modification showing a plurality of fuel admission valves or elements controlled by an electrical device. Fig. 9 is a reduced sectional view on the line 9—9 of Fig. 8.

This improvement is designed to be used in connection with a heated fuel vaporizer which is provided for each engine cylinder whether there be one or more. The improvement here shown is constructed for a six cylinder engine, but the invention can be carried out in connection with an engine having one or any number of cylinders, as will appear more fully hereinafter.

Referring now to the drawings, 1 is the combustion chamber or end of an internal combustion engine. As here shown, it is of the four cycle type, the valves 2 and 3 controlling respectively the inlet of air and the exhaust of the products of combustion. This type of engine is so fully understood by those skilled in the art that further description or illustration is unnecessary.

For the purpose of illustrating a vaporizer and igniter in connection with my present improvement, I show herein a vaporizer and igniter of the type disclosed in my before-mentioned pending application, which comprises a member 4, having electrical connections 5, with a suitable electrical source (not shown) by means of which the vaporizer and igniter is initially electrically heated, but, as stated in that application, after the engine has become thoroughly heated up and the vaporizer sufficiently heated by the explosions to vaporize and ignite the charge independent of the heat from the electric current, the electric current may be cut off until it is again needed for the initial starting of the engine. The improvement, however, may be used with other specific types of vaporizers and heaters, as my co-pending application is not limited to any particular type of vaporizer, and the specific form here shown is only for illustrative purposes so far as the present improvement is concerned.

No claim is herein made for a vaporizer and igniter since this is made the subject-matter of the before-mentioned pending application.

This present improvement relates to the provision of an electrically operated device for controlling the admission of the oil or fuel and a commutator controlling the electrical device.

The particular form of electrical device shown and the particular form of commutator here shown are only intended as illustrative of one of the mechanical expressions of the inventive idea and to which specific

forms I do not limit myself so far as the scope of this invention is concerned.

The type of mechanical devices here selected for illustrative purposes to control the admission of the fuel is a solenoid A. As here arranged, the coil 6 of the solenoid is connected by a wire 7, to a suitable electrical generator 8, of a battery or other form, and the other pole of the electrical generator 8 is grounded by means of a wire 9. The other end 10 of the coil 6 is connected with an adjustable member 11 of the commutator B. The electric circuit may be closed or opened by a suitable switch 12, placed at the proper position in the said circuit. As here shown, this solenoid A is supported upon a hollow member 12, which is screw-threaded into the cylinder head 15, similar to the well-known spark-plug now so commonly used in explosion engines. The lower end of this tubular member 13, is provided with a fuel outlet 16, with its outward end countersunk or flared, as shown at 17, for the purpose of effecting a spraying action upon the escaping oil. This outlet 16 is controlled by a suitable valve 18, and this valve 18 is connected with the movable core or armature 19 of the solenoid A. The expanding coiled spring 20 has its lower end in engagement with the upper end of the core 19, and its upper end in engagement with the cap 21 of the solenoid, thus exerting a continued closing pressure on the valve 18. When an electric current is passed through the coil 6 of the solenoid, the core 19 is lifted, thus unseating the valve 18. The distance that the valve shall be lifted is controlled by an adjustable screw 22.

The oil passes into the tubular member 13, through a pipe 23. The oil is taken from a supply tank 24 by a pump 25 and forced into a pressure tank 26. From this tank 26, it passes into the tubular member 13, and is there under pressure, preferably about four hundred pounds. The flow of oil under pressure from the tank 26 to the tubular member 13 is controlled by a valve 27. It will be understood, of course, that the pump 25 will be operated by the engine 1.

The commutator B, has the before-mentioned adjustable member 11, and it also has a rotating member 28. The construction and operation of this commutator will now be described.

Both the said members of the commutator are supported upon a shaft 29, which constitutes the cam-shaft of the engine, or one which is operatively connected therewith and rotates in unison with it, so that the shaft 29 revolves only half as fast as the crank shaft (not shown) of the engine. This feature of placing the commutator on a shaft timed to revolve, as stated, is so well-known and understood by those skilled in this art that further description or illustration is deemed unnecessary for the understanding of the present invention.

Referring now to Fig. 2, the member 11 of the commutator is provided with a plurality of electrical contacts 30, there being one for each cylinder of the engine. As here shown, there are six of these contacts and each of the contacts are respectively electrically connected with the wire fastening members 31. These wire fastening members are respectively electrically connected by the wires 32 with the respective solenoids A of the respective cylinders of the engine. The contacts 30 are flush with the surface of the non-conducting member 11, and they are triangular in shape to provide an increasing width of surface toward one end, and a decreasing width of surface toward the other end. As here shown, they are triangular in shape for accomplishing that purpose and with the broadest end of the triangular nearest the axis of the member 11. However, this specific construction of the contacts and the specific arrangement of the contacts may be varied and changed without departing from the spirit and scope of my invention, so long as the contacts are so positioned and so shaped that they have a surface which increases in width or length in one direction and decreases in width and length in the other direction, the object of which will be explained presently. This member 11 is loose on the shaft 29 and does not rotate therewith. The member 28 is keyed to the shaft 29 and rotates therewith. This member 28 carries an adjustable electrical contact 33, which projects toward and is adapted to bear upon the contact face of the member 11. As the member 28 is rotated by the shaft 29, the contact 33 successively engages the contacts 30, and this successively opens and closes the respective circuits to the respective solenoids A of the cylinders 1 of the engine. When the circuit is closed through the contact 33 and one of the contacts 30, and core 19 of the solenoid in that circuit is lifted and oil is admitted through the opening 16, under pressure, as above stated. This contact 33 is radially adjustable on the member 28 to be moved in and out. To accomplish this adjustment the contact is in a sliding carrier 34, movable in a slot 35 of the member 28. A spring 35 normally holds the carrier 34 to its innermost position and a spring 37 normally holds the contact 33 against the face of the member 11. Rotating with the shaft 29 and slidable thereon is a collar 38, which carries a wedge-shaped member 39. This wedge-shaped member 39 is adapted to enter the slot 36 of the member 38 and by engaging a wheel 40 of the carrier 34 forces the carrier with the contact 33 outward. As shown, the collar 38 is moved on the shaft 29 by a yoke 41, this yoke entering an annular

groove 42 made in the said collar. The yoke 41 is formed on one end of the bell-crank lever 43, and the other end of the bell-crank lever is connected by a rod 44 with any desired device for operating the collar 38.

From the foregoing it will be understood that when the contact 33 is in position to engage the narrow portions of the contacts 30, the valve 18 is lifted a short period of time and that the period of time that the valve is lifted and, therefore, the period of time and amount of oil admitted will be gradually increased as the contact 33 is moved toward the wide portion of the contacts 30, thus increasing the length of time that the electric current passes through the solenoid and the length of time that the valve is open, thus controlling the amount of oil permitted to pass by controlling the length of time the valve is open. As above stated, the distance the valve is permitted to open is controlled by the adjustable screw 22. The screw having been adjusted to control the distance the valve shall open and, therefore, regulates the size of the opening through which the oil is to pass, the amount of oil permitted to pass through this adjusted opening is controlled by the commutator. The commutator controls it through the position of the contact 33 in respect to the contacts 30, as above explained, and the position of the contact 33 in respect to the contacts 30 is controlled by the wedge-shaped member, and the wedge-shaped member in turn will be controlled by a governor, or other suitable devices or by hand. In this way the amount of oil or fuel admitted to the cylinders for each explosion is controlled electrically through the commutator, and the time in the cycle of the engine that the oil is to be admitted is also controlled by the commutator by oscillating the member 11 through a suitable hand-operated or other device 45. The oscillation of the member 11 in one direction will cause the contact 33 to engage the contacts 30 later in the cycle of the engine, and when oscillated in the other direction will cause the contact to engage earlier in the cycle of the engine and in this way the oil is admitted late or early in the cycle of the engine just as an electrical spark in the spark-plug of the ordinary well-known engine is caused to occur late or early in the cycle of the engine.

In Figs. 8 and 9, is shown a modification of the valve construction and in which several oil exits 16′ and several controlling valves 18 are connected with the solenoid so that a plurality of spaces instead in a single spray of each cylinder may be provided.

When desired air under pressure may be admitted through a pipe 46, to the tubular member 13 and pass with the oil through the opening 16.

I do not limit myself to the construction herein shown, for it may be varied without departing from the spirit and scope of my present improvement. The construction here shown is only one of many mechanical expressions of the inventive idea and is intended to illustrate the broad inventive conception.

Having thus described my invention, what I claim and desire to secure by Letters Patent is—

The combination with the cylinder of an explosive engine, of a fuel supply, an electric device controlling said supply, a commutator comprising two parts, one part rotatively adjustable and carrying a triangular-shaped contact, the other member rotatably driven by the engine and carrying a contact radially adjustable independent of the adjustment of said first mentioned part to engage the narrow or wide part of said triangular contact, whereby the fuel can be admitted early or late with respect to the cycle of the engine and the length of time fuel is supplied regulated independent of each other.

In testimony whereof I hereunto affix my signature in the presence of two witnesses.

ALEXANDER WINTON.

Witnesses:

HAROLD B. ANDERSON,

W. S. MCKINSTRY.