(19) Europäisches Patentamt
European Patent Office
Office européen des brevets

(11) EP 1 236 995 A1

(12) **EUROPEAN PATENT APPLICATION**

(43) Date of publication:
**04.09.2002 Bulletin 2002/36**

(51) Int Cl.[7]: **G01N 27/42**, G01N 27/49, C12Q 1/00, G01N 33/487

(21) Application number: **02076325.6**

(22) Date of filing: **15.11.1996**

(84) Designated Contracting States:
**AT BE CH DE DK ES FR GB GR IT LI NL SE**

(30) Priority: **16.11.1995 AU PN661995**

(62) Document number(s) of the earlier application(s) in accordance with Art. 76 EPC:
**96937918.9 / 0 882 226**

(71) Applicant: **USF Filtration and Separations Group Inc.**
**Timonium, Maryland 21093 (US)**

(72) Inventors:
- **Hodges, Alastair McIndoe**
  **Blackburn South, VIC 3130 (AU)**
- **Beck, Thomas William**
  **South Windsor, NSW 2756 (AU)**
- **Johansen, Oddvar**
  **Mulgrave, VIC 3170 (AU)**
- **Maxwell, Ian Andrew**
  **Leichhardt, NSW 2040 (AU)**

(74) Representative: **Eyles, Christopher Thomas**
**W.P. THOMPSON & CO.**
**Celcon House**
**289-293 High Holborn**
**London WC1V 7HU (GB)**

Remarks:
This application was filed on 02 - 04 - 2002 as a divisional application to the application mentioned under INID code 62.

(54) **Repetitive potential step method for amperometric detection**

(57) A method for determining the concentration of a reduced or oxidized form of a redox species in an electrochemical cell of the kind comprising a working electrode and a counter electrode spaced from the working electrode such that reaction products from the counter electrode arrive at the working electrode, the method comprising the steps of applying (21) an electric potential between the electrodes, such that the electro-oxidation of the redox species is diffusion controlled, determining the current as a function of time, estimating the magnitude of the steady state current (23), interrupting and reapplying the potential, again determining current as a function of time and estimating the reverse potential steady state (25).

FIGURE 5

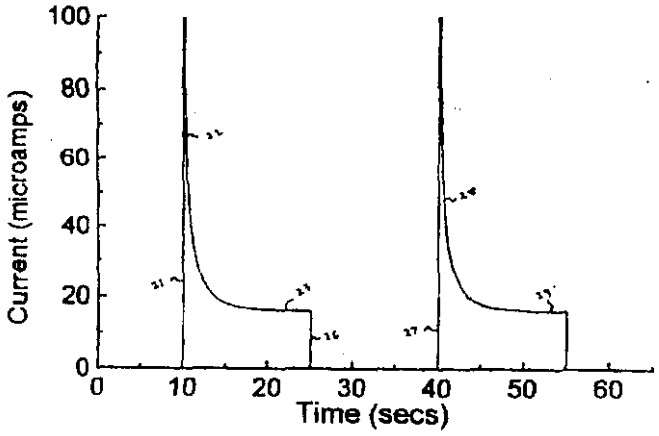


EP 1 236 995 A1

Printed by Jouve, 75001 PARIS (FR)

## Description

FIELD OF THE INVENTION

**[0001]** This invention relates to an electrochemical method for determining the concentration of an analyte in a carrier and to apparatus suitable for use in conducting the method.

BACKGROUND ART

**[0002]** The invention herein described is an improvement in or modification of the invention described in our co-pending European Patent Application No. 96917287.3 (International Patent Application No. PCT/AU96/00365; WO-A-97/00441) the contents of which are incorporated herein by reference.

**[0003]** The invention will herein be described with particular reference to a biosensor adapted to measure the concentration of glucose in blood, but it will be understood not to be limited to that particular use and is applicable to other analytic determinations.

**[0004]** It is known to measure the concentration of a component to be analysed in an aqueous liquid sample by placing the sample into a reaction zone in an electrochemical cell comprising two electrodes having an impedance which renders them suitable for amperometric measurement. The component to be analysed is allowed to react directly with an electrode, or directly or indirectly with a redox reagent whereby to form an oxidisable (or reducible) substance in an amount corresponding to the concentration of the component to be analysed. The quantity of the oxidisable (or reducible) substance present is then estimated electrochemically. Generally this method requires sufficient separation of the electrodes so that electrolysis products at one electrode cannot reach the other electrode and interfere with the processes at the other electrode during the period of measurement.

**[0005]** In our co-pending application we described a novel method for determining the concentration of the reduced (or oxidised) form of a redox species in an electrochemical cell of the kind comprising a working electrode and a counter (or counter/reference) electrode spaced from the working electrode. The method involves applying an electrical potential difference between the electrodes, spacing the working electrode from the counter electrode so that reaction products from the counter electrode arrive at the working electrode and selecting the potential of the working electrode so that the rate of electro-oxidation of the reduced form of the species (or of electro-reduction of the oxidised form) is diffusion controlled. By determining the current as a function of time after application of the potential and prior to achievement of a steady state current and then estimating the magnitude of the steady state current, the method previously described allows the diffusion coefficient and/or the concentration of the reduced (or oxidised) form of the species to be estimated.

**[0006]** Our co-pending application exemplifies this method with reference to use of a "thin layer" cell employing a GOD/Ferrocyanide system. As herein used, the term "thin layer electrochemical cell" refers to a cell having closely spaced electrodes such that reaction products from the counter electrode arrive at the working electrode. In practice, the separation of electrodes in such a cell for measuring glucose in blood will be less than 500 microns, and preferably less than 200 microns.

**[0007]** The chemistry used in the exemplified electrochemical cell is as follows:

$$\text{glucose} + \text{GOD} \rightarrow \text{gluconic acid} + \text{GOD}^* \qquad \text{reaction 1}$$

$$\text{GOD}^* + 2\text{ferricyanide} \rightarrow \text{GOD} + 2\text{ferrocyanide} \qquad \text{reaction 2}$$

where GOD is the enzyme glucose oxidase, and GOD* is the 'activated' enzyme. Ferricyanide ($[Fe(CN)_6]^{3-}$) is the 'mediator' which returns the GOD* to its catalytic state. GOD, an enzyme catalyst, is not consumed during the reaction so long as excess mediator is present. Ferrocyanide ($[Fe(CN)_6]^{4-}$) is the product of the total reaction. Ideally there is initially no ferrocyanide, although in practice there is often a small quantity. After reaction is complete the concentration of ferrocyanide (measured electrochemically) indicates the initial concentration of glucose. The total reaction is the sum of reactions 1 and 2:

$$\text{glucose} + 2\text{ferricyanide} \xrightarrow{\text{GOD}} \text{gluconic acid} + 2\text{ferrocyanide} \qquad \text{reaction 3}$$

"Glucose" refers specifically to β-D-glucose.

[0008] The prior art suffers from a number of disadvantages. Firstly, sample size required is greater than desirable. It would be generally preferable to be able to make measurements on samples of reduced volume since this in turn enables use of less invasive methods to obtain samples.

[0009] Secondly, it would be generally desirable to improve the accuracy of measurement and to eliminate or reduce variations due, for example, to cell asymmetry or other factors introduced during mass production of microcells.

[0010] Thirdly, it would be generally desirable to reduce the time that is required in which to obtain a measurement. The test protocols used in current commercially available electrochemical glucose sensors involve a predetermined wait period at the beginning of the test during which the enzyme reacts with the glucose to produce the specie that is sensed electrochemically. This initial period is fixed at the maximum necessary to achieve the desired reaction under all conditions of use.

[0011] Fourthly, it would be desirable to eliminate variations due to oxygen. Oxygen can be plentiful in blood, either dissolved in the plasma, or bound in haemoglobin. It can also be introduced during "finger sticking", where a blood drop of small volume and high surface area is exposed to the atmosphere prior to introduction to a cell. Oxygen can interfere since oxygen is a mediator for GOD. The reaction is as follows:

$$\text{glucose} + \text{GOD} \rightarrow \text{gluconic acid} + \text{GOD}^* \qquad \text{reaction 4}$$

$$\text{GOD}^* + \text{oxygen} + \text{water} \rightarrow \text{GOD} + \text{hydrogen peroxide} \qquad \text{reaction 5}$$

[0012] The total reaction is given by:

$$\text{glucose} + \text{water} + \text{oxygen} \xrightarrow{\text{GOD}} \text{gluconic acid} + \text{hydrogen peroxide} \qquad \text{reaction 6}$$

[0013] In most situations the complication of oxygen also acting as a mediator is unwanted, simply because the concentration of final ferrocyanide no longer is directly proportional to the concentration of initial glucose. Instead, the initial glucose concentration is then related to both the final concentration of ferrocyanide and of hydrogen peroxide.

## OBJECT OF THE INVENTION

[0014] An object of the invention is to provide an improved method for determination of the concentration of an analyte in a carrier which avoids or ameliorates the disadvantages of prior art. It is an object of preferred forms of the invention to provide a biosensor of improved accuracy, and/or reliability and/or speed.

## DISCLOSURE OF THE INVENTION

[0015] According to one aspect the invention consists in a method for determining the concentration of a reduced (or oxidised) form of a redox species in an electrochemical cell of the kind comprising a working electrode and a counter electrode spaced from the working electrode by a predetermined distance, said method comprising the steps of:

(a) applying an electric potential between the electrodes, wherein the electrodes are spaced so that reaction products from the counter electrode arrive at the working electrode by diffusion and wherein the potential of the working electrode is such that the rate of the electro-oxidation of the reduced form (or oxidised form) of the redox species is diffusion controlled,
(b) determining current as a function of time after application of the potential and prior to achievement of a steady state,
(c) estimating the magnitude of the steady state current,
(d) interrupting, or reversing the polarity, of the potential,
(e) repeating step (b) and step (c).

[0016] The invention stems from the discovery that if the polarity is reversed (ie the anode becomes the cathode and vice versa) after the initial steady state current is achieved, then a second transient current can be observed and after a period of time a second steady state is achieved. This has proved useful for diagnosing, and for reducing the effects of, cell asymmetry and other factors which influence the transient current. It also permits greater reliability and/

or accuracy of estimation by allowing measurements to be made repetitively using reverse polarities. Likewise if the potential is interrupted for a time sufficient for the concentration profile to relax to a random state and is then reapplied, steps (b) and (c) can be repeated.

**[0017]** According to a second aspect the invention consists in a method according to the first aspect for measuring the concentration of glucose in a sample by means of a cell having a working electrode. a counter electrode, an enzyme catalyst and a redox mediator, comprising the steps of operating the cell at a potential higher than that of the redox reaction so as to oxidise hydrogen peroxide at the anode and then conducting a method according to the first aspect.

**[0018]** By this means the interference of oxygen can be ameliorated as explained in more detail hereinafter.

**[0019]** According to a third aspect the invention consists in a method according to the first or second aspect wherein the sample is allowed to react with an enzyme catalyst and a redox mediator comprising the steps of:

(a) applying a potential between the electrodes before or during filling of the cell,
(b) measuring the increase in current as a function of time,
(c) determining or predicting from the measurement in step (b) the time of completion of reaction with said catalyst, and
(d) then interrupting or reversing the polarity of the potential.

## BRIEF DESCRIPTION OF THE DRAWINGS

**[0020]** The invention will now be more particularly described by way of example only and with reference to the accompanying drawings wherein:

Figure 1 exemplifies the reactions taking place in a cell according to the invention.
Figure 2 illustrates the concentration profiles across an electrochemical cell according to the invention before the application of an electrical potential, after application of the potential and prior to reaching steady state, and at steady state.
Figure 3 shows the time dependence of current prior to and after application of electrical potential.
Figure 4 shows the ferrocyanide concentration profiles across an electrochemical cell according to the invention prior to a polarity reversal, after reversal and prior to reaching a steady state, and at steady state.
Figure 5 shows the time dependence of current prior to and after a polarity reversal.
Figure 6 shows the time dependence of current prior to and after an interruption of applied potential of 15 seconds.
Figure 7 shows the reactions in an electrochemical cell with peroxide oxidation.
Figure 8 shows the time dependence of current when an initial potential sufficient to oxidise hydrogen peroxide is applied.
Figure 9 describes the cell of Figure 7 in plan view.
Figure 10 describes an embodiment of a cell suitable for use in the invention in cross-section view on line 10-10 of Figure 9.
Figure 11 describes the cell of Figure 7 in end section view.

**[0021]** With reference to Figures 9, 10 and 11 there is shown (not to scale) by way of example only an electrochemical cell suitable for use in the method of the invention.

**[0022]** The cell comprises a polyester core 4 approximately 18mm x 5mm and 100 micron thick and having a circular aperture 8 of 3.4mm diameter. Aperture 8 defines a cylindrical cell side wall 10. Adhered to one side of core 4 is a polyester sheet 1 having a sputter coating of palladium 2. The sputter coating took place at between 4 and 6 millibar pressure in an atmosphere of argon gas to give a uniform coating thickness of about 100-1000 angstroms. The sheet is adhered by means of an adhesive 3 to core 4 with palladium 2 adjacent core 4 and covering aperture 8.

**[0023]** A second polyester sheet 7 having a second sputter coating of palladium 6 is adhered by means of contact adhesive 5 to the other side of core 4 and covering aperture 8. There is thereby defined a cell having cylindrical side wall 10 and closed each end by palladium metal. The assembly is notched at 9 to provide for a solution to be admitted to the cell or to be drawn in by wicking or capillary action and to allow air to escape. The metal films 2, 6 are connected with suitable electrical connections or formations whereby potentials may be applied and currently measured. The cell is furnished with GOD and ferrocyanide in dry form. The cell is shown schematically in Figure 1.

**[0024]** In use according to the method a drop of blood is drawn into the cell at 9 by capillary action and allowed to react.

## PREFERRED EMBODIMENTS OF THE INVENTION

**[0025]** The electrochemical means for measuring the ferrocyanide concentration after complete reaction can be considered by reference to figure 1.

[0026] In a thin layer cell the initial concentration of ferrocyanide and ferricyanide (after 'enzymatic' reaction is complete) is equal throughout the cell (the axis of interest being that between the electrodes). The concentration profile of ferrocyanide is given in figure 2.

[0027] When a particular potential is applied across the cell ferricyanide is converted to ferrocyanide at the cathode and ferrocyanide is converted to ferricyanide at the anode. The chemistry is so arranged that after complete reaction there is still an excess of ferricyanide compared to ferrocyanide. For this reason the process that limits the complete electrochemical process is the conversion of ferrocyanide to ferricyanide at the anode, simply because ferrocyanide is at a significantly lower concentration. Further the rate limiting step for the reaction of ferrocyanide is the diffusion of ferrocyanide to the anode. After a period of time a steady-state is achieved, wherein the concentration profile of ferrocyanide and ferricyanide remains constant (see figure 2).

[0028] Therefore there are two limiting situations: initially 20 the ferrocyanide is evenly distributed throughout the cell. Then after a known potential is applied across the cell for a period of time a steady-state concentration profile 23 of ferrocyanide is achieved. The 'transient' 22 reflects the measured current across the cell as the concentration adjusts from the initial situation to the final steady state situation 23. This is shown as a function of time in Figure 3. It has been found that the change in the current with time during this 'transient' period is dependent upon the total concentration of ferrocyanide and the diffusion coefficient of ferrocyanide.

[0029] By solving the diffusion equations for this situation, it can be shown that the transient can be adequately described by the following equation over a restricted calculable time range:

$$\ln\left(\frac{i}{i_{ss}}-1\right)=\frac{-4\pi^2 Dt}{L^2}+\ln(2) \qquad \text{Eqn 1}$$

where i is the measured current, $i_{ss}$ is the current at steady-state, D the diffusion coefficient of ferrocyanide in the cell, L the separation distance between the anode and cathode, and t is time.

[0030] This is a simple solution of the general diffusion equation. However, it may be possible to use other solutions.

[0031] The final current at steady state also depends upon the total concentration of ferrocyanide and the diffusion coefficient of ferrocyanide. The steady state current can also be modelled by diffusion theory, and is given by:

$$i_{ss} = \frac{2D\,FCA}{L} \qquad \text{Eqn 2}$$

where F is the Faraday constant. C the initial concentration of ferrocyanide and A the area of the working electrode. By initial concentration is meant the unperturbed concentration (shown as 20 in Figure 2).

[0032] Analysis of the current observed during the transient and also at steady state allows calculation of both the concentration and diffusion coefficient of ferrocyanide, and thus also the initial glucose concentration.

[0033] This analysis is achieved by plotting:

$$\ln\left(\frac{i}{i_{ss}}-1\right) \qquad \text{Eqn 3}$$

versus time which is substantially linear over a restricted and calculable time range and thus can be analysed for example by linear least squares regression . Since L is a constant for a given cell, measurement of i as a function of time and of $i_{ss}$ thus enables the value of the diffusion coefficient of the redox mediator to be calculated and the concentration of the analyte to be determined.

[0034] Another possible way to analyse the data is to use the variation of current with time soon after the potential step is applied to the electrodes. In this time period the current can be adequately described by the Cottrell equation. That is:

$$i \propto FAD^{1/2}C/(\pi^{1/2}t^{1/2}) \qquad \text{Eqn 4}$$

[0035] By least squares regression on a plot of i vs $1/t^{1/2}$ a value of $FAD^{1/2}C/\pi^{1/2}$ can be estimated from the slope of this plot. The steady state current $i_{ss}$ is given as before, so by combining the slope of the plot given above with the steady state current a value of the concentration of the ferrocyanide, independent of the diffusion coefficient of the ferrocyanide in the cell, can be estimated. This is given by:

$$C = 2slope^2 pi/(FALi_{ss}) \quad \text{Eqn 5}$$

**[0036]** In an example according to the present invention, a sample of blood is admitted to a thin layer cell containing a GOD/ferrocyanide system such as previously described with reference to Figures 7,8 and 9. As illustrated in Figure 3 after allowing a short time 20 for reaction, an electric potential is applied between the electrodes, current flow commences when the potential is applied 21 but then falls as a transient 22 towards a steady state level 23. The diffusion coefficient and/or glucose concentration are derived by measuring current as a function of time and by estimating the steady state current.

**[0037]** According to the present invention, the current is then interrupted, or reversed in polarity, for example by means of a suitable switch. If the polarity is reversed, a second transient is then observed, and a second steady state is reached after a further period of time although the profile is reversed. The underlying change in ferrocyanide concentration profile across the cell is shown schematically in Figure 4. The initial concentration profile prior to current reversal is 23. The new steady state concentration profile is shown at 25. The transient concentration profiles are exemplified at 24.

**[0038]** By solving the diffusion equations for this situation, it can be shown that the transient current is described by:

$$\ln\left(\frac{i}{i_{ss}}-1\right)=\frac{-4\pi^2 Dt}{L^2}+\ln(4) \quad \text{Eqn 6}$$

**[0039]** It is therefore simple to re-estimate the diffusion coefficient and concentration under the reversed polarity conditions. In theory the results should be independent of the type of transient or polarity. In practice, the results may differ due to factors affecting the transient such as sample inhomogeneity, state of the electrodes, or more importantly, due to asymmetries in the cell construction. This measure is therefore useful for cell diagnosis and also enables greater accuracy by allowing repetitive measurement and averaging with reverse polarities.

**[0040]** Similarly, if the potential is interrupted after steady state is reached, the initial concentration profile will be re-established in a short time (for example 4 seconds).

**[0041]** Once the initial state is re-established (or approximated) the potential can be reapplied and the procedure repeated without current reversal. Figure 6 shows a plot of current versus time similar to that of Figure 3 but having the potential interrupted at 26 and reapplied after 15 seconds at 27 yielding a new transient current 28 and then a state 29.

**[0042]** As stated previously, the presence of oxygen in the blood is an interference since the concentration of final ferrocyanide is then not directly proportional to the initial glucose. Instead the initial glucose is related both to the final concentration of ferrocyanide plus hydrogen peroxide. however, the present inventors have found that hydrogen peroxide can be oxidised at the anode at a known potential which is higher than that for the ferrocyanide/ferricyanide redox reaction. The total electrochemical path is given in Figure 7. The hydrogen peroxide reaction is:

$$\text{hydrogen peroxide} \rightarrow \text{oxygen} + 2\,H^+ + 2\,e^- \quad \text{reaction 7}$$

**[0043]** If, during the period of enzyme reaction a potential is applied (Figure 8) across the cell that is sufficient to oxidise hydrogen peroxide. then the following will happen during that period:

(a) glucose will be reacted to gluconic acid.
(b) ferrocyanide and hydrogen peroxide will result.
(c) the ferrocyanide/ferricyanide redox will eventually reach steady state.
(d) the peroxide will be oxidised at the anode and the electrons used to convert ferricyanide to ferrocyanide.

**[0044]** In total, after a period of time (approximately 2½ seconds in Figure 8) at a constant potential all the peroxide will be converted to oxygen (which is then a catalyst, and will return to complete more enzyme chemistry until glucose is exhausted), and the electrons utilised to convert ferricyanide to ferrocyanide.

**[0045]** At this stage (60 seconds in Figure 8) a reverse transient is applied. That is, the polarity of the cells is switched, but now at the lower potential suitable for the ferricyanide/ferrocyanide redox reaction. The final steady state ferrocyanide will once again reflect the initial glucose concentration. This can be analysed in the previously described manner to determine the total concentration of glucose in the initial sample.

**[0046]** Using the method of the invention the reaction phase of the test can be monitored in situ electrochemically

without interfering with the measurement phase. When the reaction is complete one can proceed to measurement without further delay. The wait time will vary from test to test and will be the minimum necessary for any particular sample and cell. taking account of changes in enzyme activity from cell to cell as well as different temperatures and glucose concentrations. This is in stark contrast to prior art in which measurement is delayed until the maximum time required for reaction after allowing for all these factors.

**[0047]** In the present method the reaction phase is monitored by applying a potential between the two electrodes of, for example, -300mV as soon as the cell begins to fill with sample.

**[0048]** A linear concentration profile of the reduced mediator is soon achieved across the cell. As more reduced mediator is produced by the enzyme reaction with glucose this linear concentration profile becomes steeper and the current increases. When the reaction is complete the current no longer increases. This point can be detected by well known electronic means and the measurement phase of the test can then be commenced.

**[0049]** The end-point of the reaction can also be estimated by fitting a theoretical kinetic equation to the current versus time curve generated during this part of the test This equation can predict the degree of completion of the reaction at any time, so would allow knowledge of when the end-point would occur without having to wait to get there. This would further shorten the test time. For example, one could fit an equation to the measured prepulse current versus time curve. This equation could then predict that at time X the reaction will be, for example, 90% complete.. If one measures the concentration at time X one would then divide the answer by 0.90 to get the true concentration.

**[0050]** The measurement of concentration in this system is done by reversing the potential, ie applying +300mV between the electrodes. A current versus time curve will then occur, which is the same as that of the second transient in a double transient experiment ie by transforming the current i measured during the measurement phase one can obtain a plot of ln(i/iss - 1) versus time which will have a slope of -4pi^2D/1^2 and an intercept ln(4). The normal analysis can then be used to obtain the concentration of glucose.

**[0051]** In some situations it may be difficult or impossible to know the distance between the electrodes in the electrochemical cell. For example, very small separations (ca. 10 microns) may be very difficult to manufacture or measure reproducibly. In these situations the use of information from two adjoining cells can be used to calculate the concentration of an analyte in a sample without knowledge of the cell separation if one of the cells contains a known concentration of the analyte or the corresponding reduced mediator prior to sample addition. Alternatively, a known quantity of this analyte or reduced mediator can be added to the sample destined for one of the two cells prior to addition of the sample to the cell. Another variation is if both cells contain a predetermined analyte or reduced mediator concentration but each has a different concentration. Yet another variation is if two different predetermined quantities of the analyte or reduced mediator are added to two aliquots of the sample, which are then added to the adjoining cells.

**[0052]** The two electrochemical cells are then used in the normal fashion, and from each cell the following quantities are measured: steady state current ($i_{ss}$) and the slope of the straight line defined by $\ln(i/i_{ss}-1)$ versus time, where i is the measured current. With a knowledge of these values and also a knowledge of the difference in concentration of the analyte or reduced mediator between the two cells, which is known (it is equal to that value purposely added to one cell), it is possible to calculate the concentration of analyte or reduced mediator in the sample, without any knowledge of the separation distance of the electrodes.

**[0053]** The above can be used in conjunction with a third cell that is used to measure the background current or concentration due to current caused by, for example, reduced mediator formed by the application and drying of the chemistry, catalytic effect of the metal surface, oxidation of the metal surface, sample components that have effects on the analyte or mediator, electrochemically responsive components of the sample etc. This background concentration or current would be subtracted from the values measured from the two cells discussed above to calculate the true values for each cell resulting from the analyte in the sample, and in one case also the analyte or reduced mediator purposely added to the cell or the sample.

**[0054]** As will be apparent to those skilled in the art from the teaching hereof the method is suitable for use with automatic measuring apparatus. Cells of the kind described may be provided with electrical connectors to an apparatus provide with a microprocessor or other programmed electronic control and display circuits which are adapted to make the required measurements perform the required calculations and to display the result. The method may be used to measure the concentration of analytes other than glucose and in liquids other than blood.

**[0055]** The method may be conducted using cells of other design and/or construction and using known catalysts and redox systems other than that exemplified.

**[0056]** Valuable features described herein are as follows:

1. A method for determining the concentration of a reduced (or oxidized) form of a redox species in an electrochemical cell of the kind comprising a working electrode and a counter electrode spaced from the working electrode by a predetermined distance, said method comprising the steps of:

(a) applying an electric potential between the electrodes, wherein the electrodes are spaced so that reaction

products from the counter electrode arrive at the working electrode by diffusion and wherein the potential of the working electrode is such that the rate of the electro-oxidation of the reduced form or electroreduction of the oxidised form of the redox species is diffusion controlled,
(b) determining current as a function of time after application of the potential and prior to achievement of a steady state,
(c) estimating the magnitude of the steady state current,
(d) interrupting and reapplying, or reversing the polarity, of the potential, and
(e) repeating step (b) and step (c).

2. A method according to feature 1, wherein the polarity is reversed in step (d).

3. A method according to feature 1 or feature 2, wherein the electrodes are separated by less than 500 microns.

4. A method according to feature 1 or feature 2, wherein the electrodes are separated by less than 200 microns.

5. A method according to any one of the preceding features, wherein the working electrode extends in a plane parallel to and facing the plane in which the counter electrode extends.

6. A method according to feature 1, wherein the potential is reversed repetitively and the concentration of the species is estimated as an average from the result obtained prior to each reversal.

7. A method according to any one of the preceding features, wherein the cell contains an enzyme and a redox mediator.

8. A method according to any one of the preceding features, wherein the cell contains GOD.

9. A method according to any one of the preceding features, wherein the cell contains ferricyanide.

10. A method according to any one of the preceding features, wherein the sample is allowed to react with an enzyme catalyst and a redox mediator, said method comprising the prior step of operating the cell at a potential higher than that of the redox reaction so as to oxidize hydrogen peroxide at the anode.

11. A method according to any one of the preceding features, wherein the sample is allowed to react with an enzyme catalyst and a redox mediator further comprising the steps of:

(a) applying a potential between the electrodes before or during filling of the cell
(b) measuring the increase in current as a function of time,
(c) determining or predicting from the measurement in step (b) the time of substantial completion of said reaction with said catalyst, and
(d) then interrupting or reversing the polarity of, the potential.

12. A method according to any one of the preceding features, further comprising a second cell containing a known concentration of analyte or reduced mediator and wherein the second cell is used to calibrate the first.

13. A method according to any one of the preceding features, wherein a known concentration of analyte or reduced mediator is added to the analyte and used for calibration.

## Claims

1. A method for determining the concentration of a reduced (or oxidized) form of a redox species in an electrochemical cell of the kind comprising a working electrode and a counter electrode spaced from the working electrode by a predetermined distance, said method comprising the steps of:

(a) applying an electric potential between the electrodes, wherein the electrodes are spaced so that reaction products from the counter electrode arrive at the working electrode by diffusion and wherein the potential of the working electrode is such that the rate of the electro-oxidation of the reduced form (or electroreduction of the oxidised form) of the redox species is diffusion controlled,

(b) determining current as a function of time after application of the potential and prior to achievement of a steady state,
(c) estimating the magnitude of the steady state current,
(d) interrupting and reapplying the potential, wherein the potential is reapplied prior to achieving a steady state, and
(e) repeating step (b) and step (c).

2. A method according to claim 1, wherein the electrodes are separated by less than 500 microns.

3. A method according to claim 1, wherein the electrodes are separated by less than 200 microns.

4. A method according to any one of the preceding claims, wherein the working electrode extends in a plane parallel to and facing the plane in which the counter electrode extends.

5. A method according to claim 1 wherein the potential is interrupted repetitively and the concentration of the species is estimated as an average from the result obtained prior to each interruption.

6. A method according to claim 1, wherein the cell contains an enzyme and a redox mediator.

7. A method according to claim 6, wherein the cell contains GOD.

8. A method according to claim 6, wherein the cell contains ferricyanide.

9. A method according to claim 1, wherein a sample is allowed to react with an enzyme catalyst and a redox mediator, said method comprising the prior step of operating the cell at a potential higher than that of the redox reaction so as to oxidize hydrogen peroxide at the anode.

10. A method according to claim 1, wherein a sample is admitted to the cell and allowed to react to produce an electrochemically oxidizable or reducible species further comprising the steps of:

(a) applying a potential between the electrodes before or during filling of the cell,
(b) measuring the change in current as a function of time,
(c) determining or predicting from the measurement in step (b) the time of substantial completion of said reaction and/or the magnitude of the measured current upon substantial completion of said reaction,
(d) then interrupting and reapplying the potential, wherein the potential is reapplied prior to achievement of a steady state,
(e) then determining current as a function of time after reapplication of the potential and prior to achievement of a steady state,
(f) estimating the magnitude of the steady state current, and
(g) from the results of steps (c), (e) and (f) estimating the concentration of an analyte in the sample.

11. A method according to claim 10, further comprising providing a second cell containing a known concentration of analyte or reduced mediator and wherein the second cell is used to calibrate the first.

12. A method according to claim 10, wherein a known concentration of analyte or reduced mediator is added to the analyte and used for calibration.

13. A method according to claim 11, wherein the potential is applied between the electrodes continuously between step (a) and step (c).

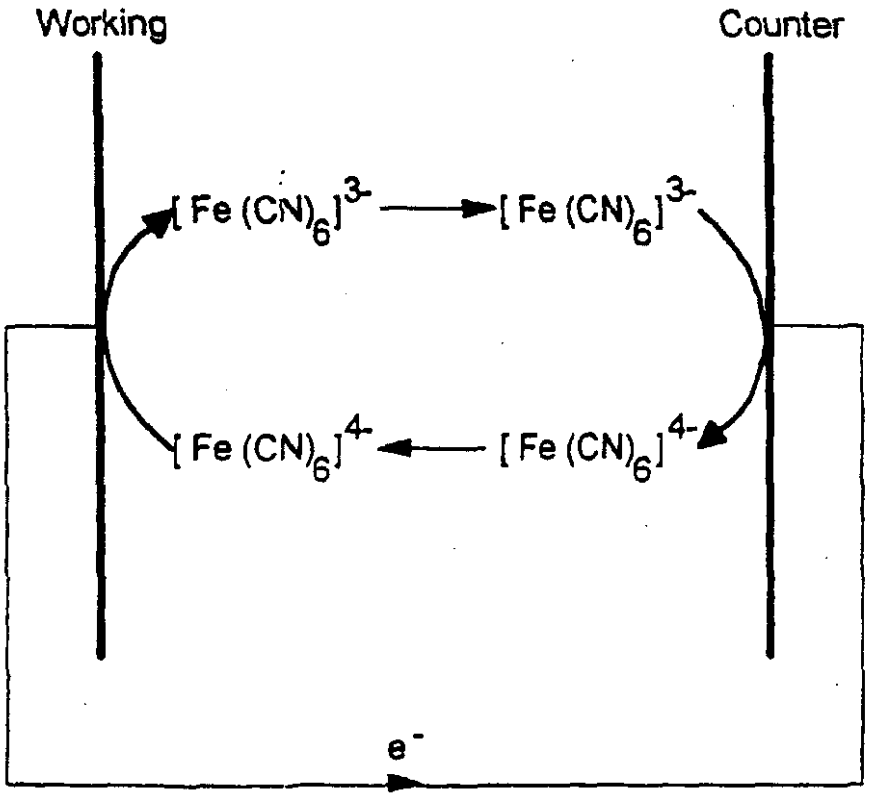


FIGURE 1

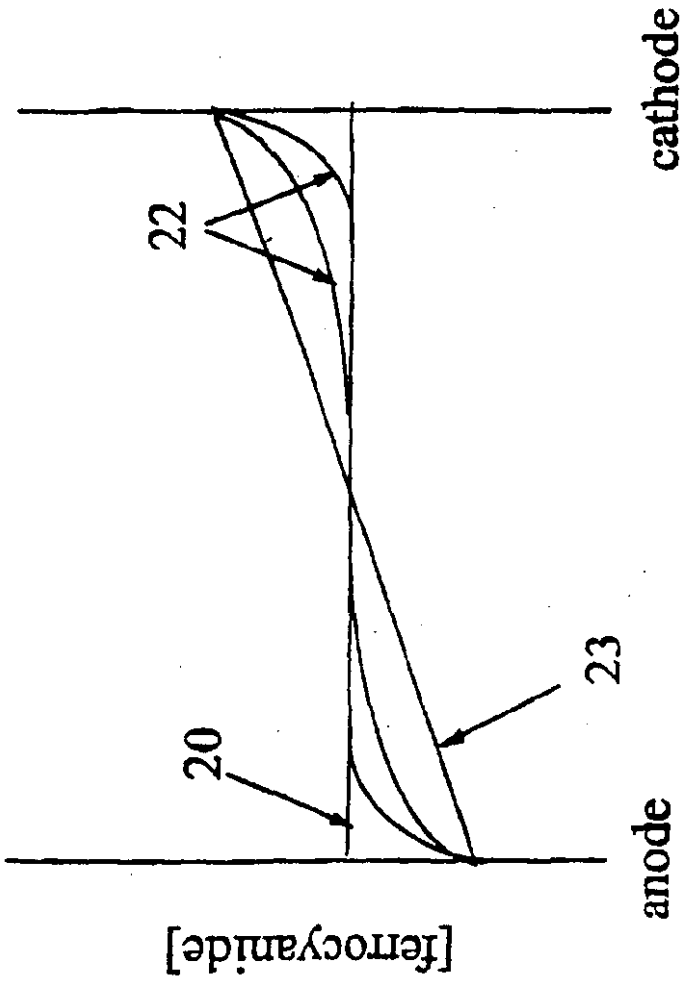


FIGURE 2

FIGURE 3

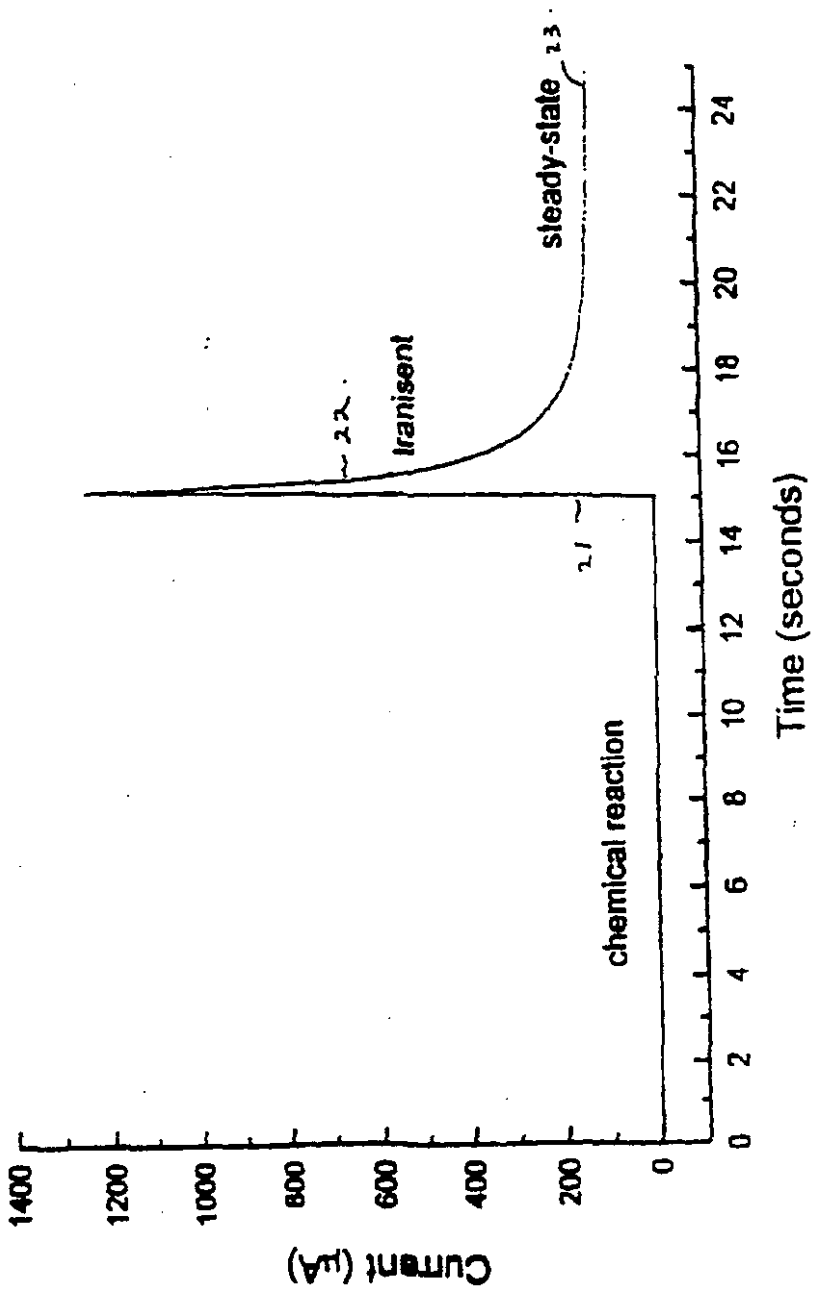
steady-state
transient
chemical reaction
Current (pA)
Time (seconds)
1400
1200
1000
800
600
400
200
0
0
2
4
6
8
10
12
14
16
18
20
22
24

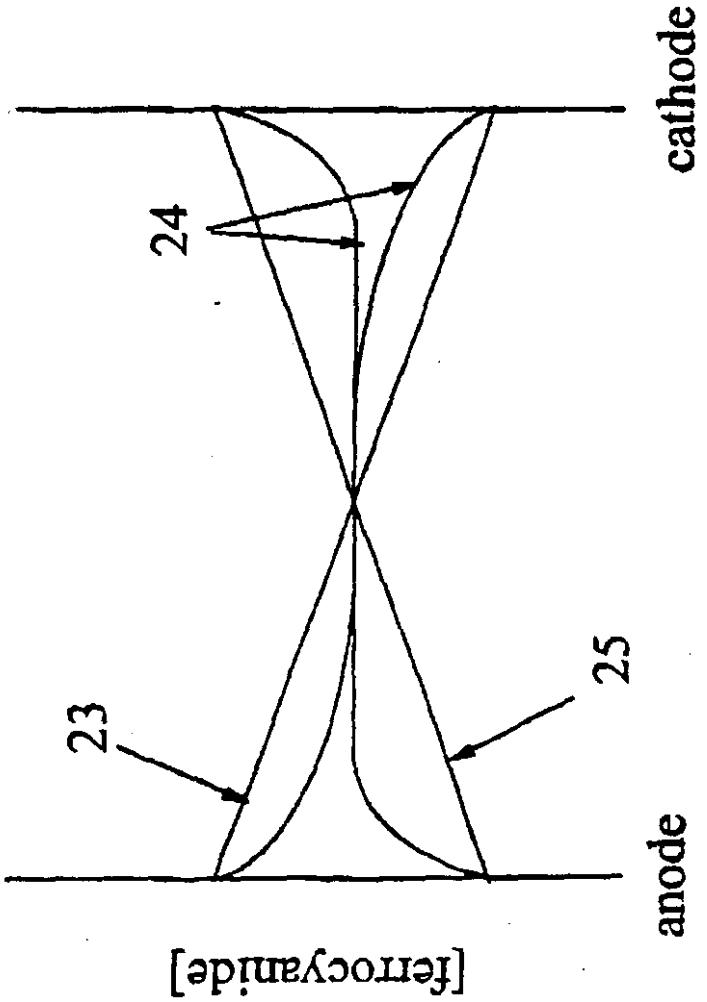


FIGURE 4

FIGURE 5

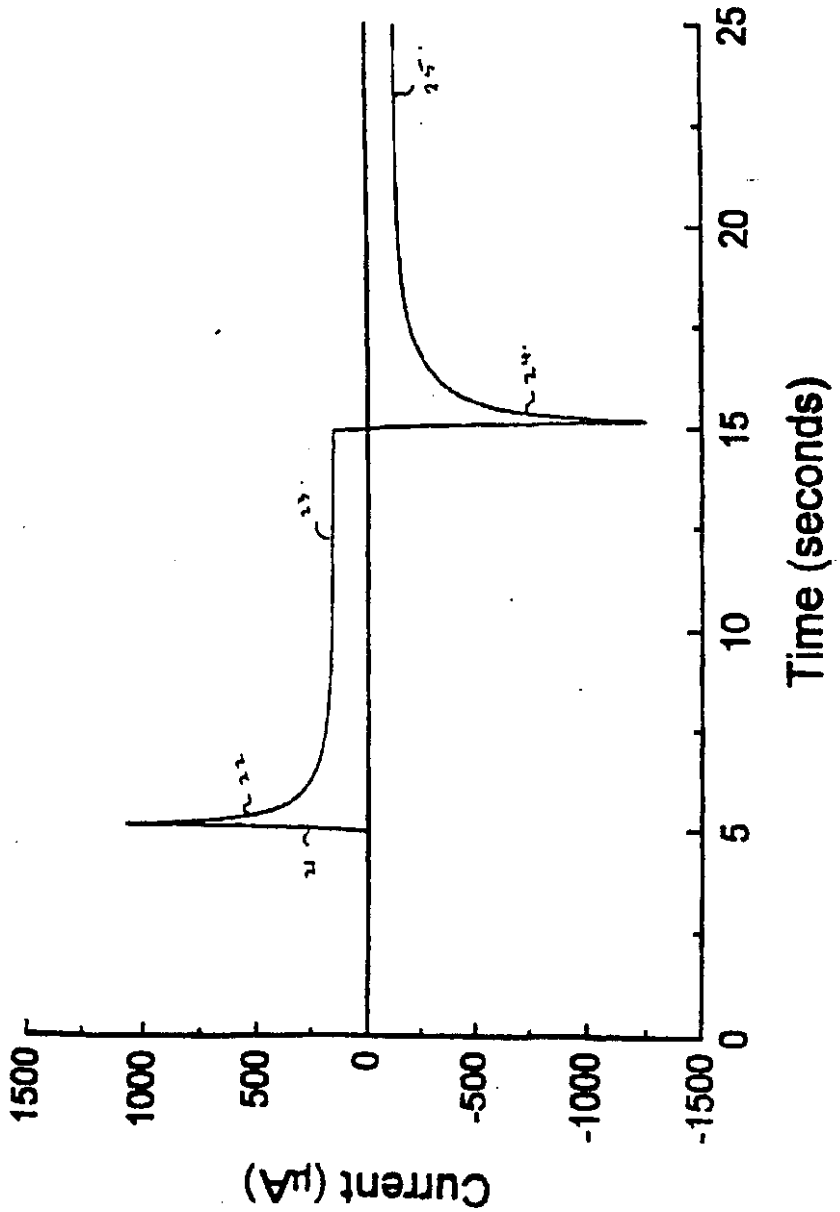
Current (μA)
1500
1000
500
0
-500
-1000
-1500
0
5
10
15
20
25
Time (seconds)

FIGURE 6

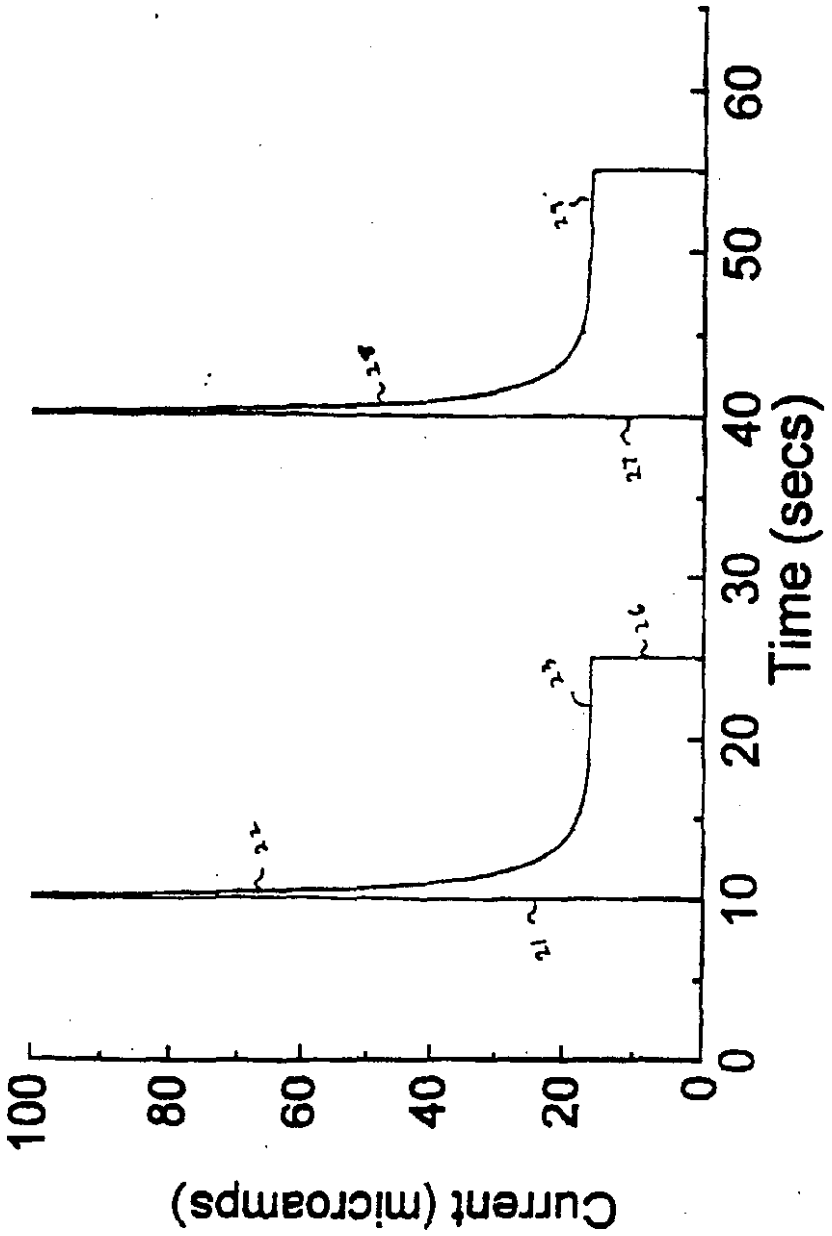

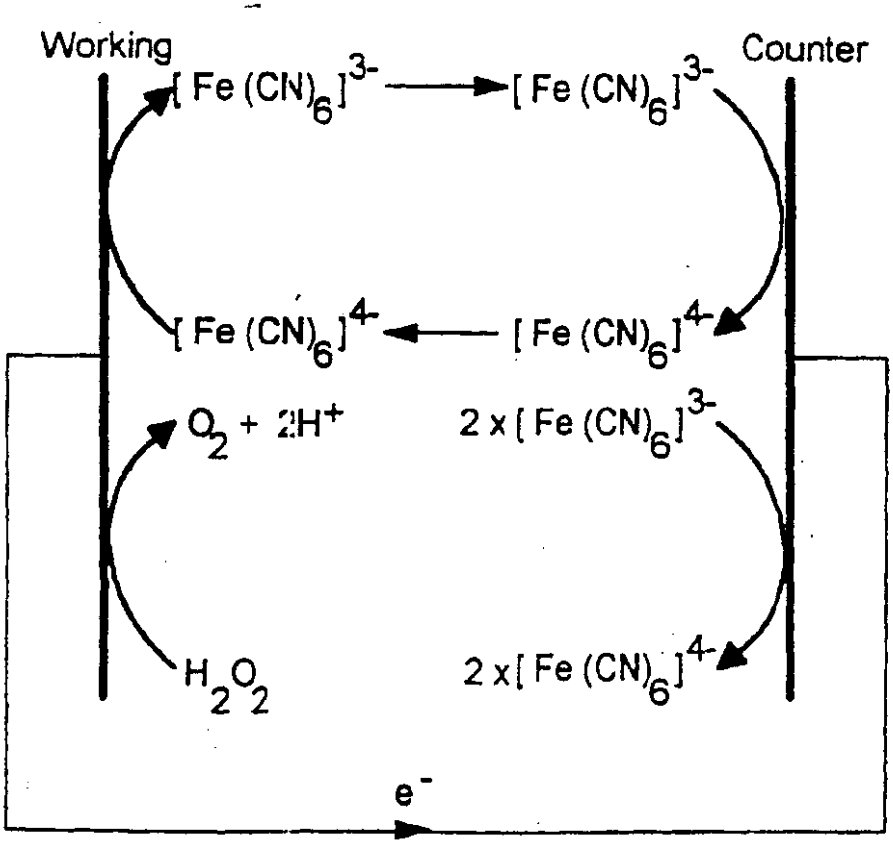
Working
Counter
[ Fe (CN)6 ]3-
[ Fe (CN)6 ]3-
[ Fe (CN)6 ]4-
[ Fe (CN)6 ]4-
O2 + 2H+
2 x [ Fe (CN)6 ]3-
H2O2
2 x [ Fe (CN)6 ]4-
e-

FIGURE 7

FIGURE 8

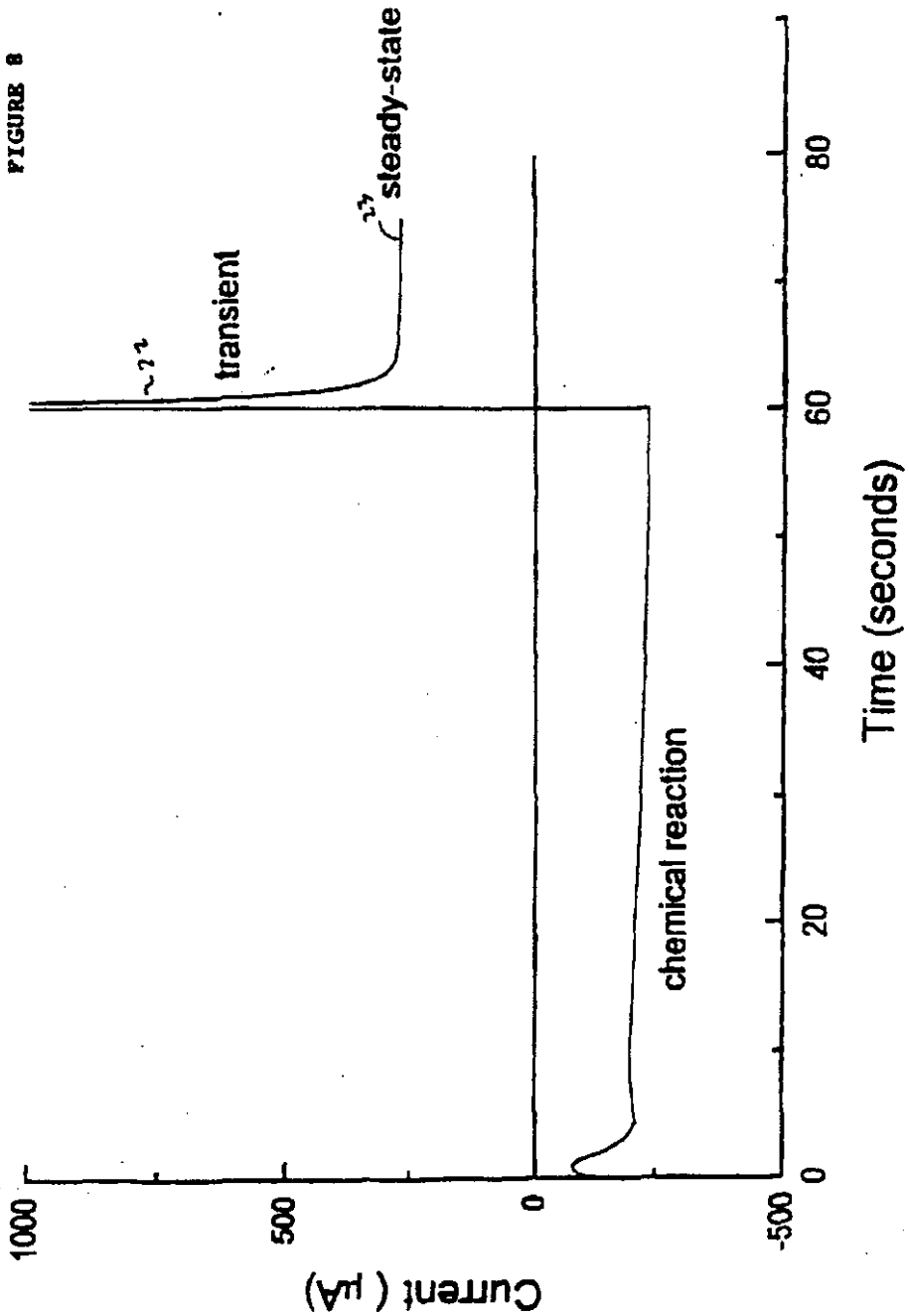
transient
steady-state
chemical reaction
1000
500
0
-500
Current ( μA)
0
20
40
60
80
Time (seconds)

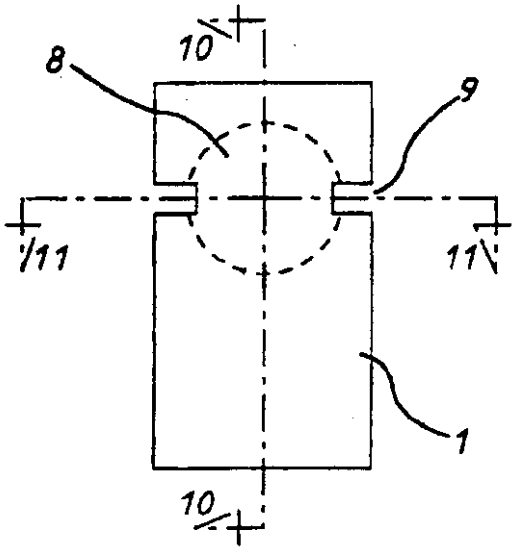


FIG. 9

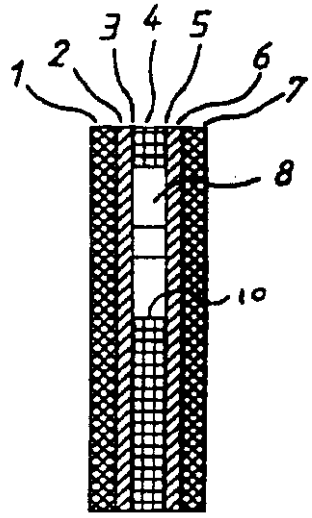


FIG. 10

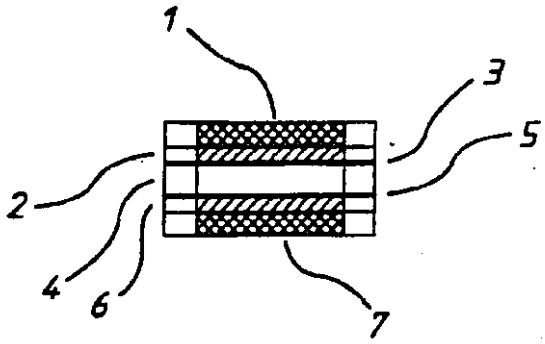


FIG. 11

European Patent Office

# EUROPEAN SEARCH REPORT

Application Number
EP 02 07 6325

## DOCUMENTS CONSIDERED TO BE RELEVANT

| Category | Citation of document with indication, where appropriate, of relevant passages | Relevant to claim | CLASSIFICATION OF THE APPLICATION (Int.Cl.7) |
|---|---|---|---|
| D,E | WO 97 00441 A (MEMTEC AMERICA CORP ;HODGES ALASTAIR MCINDOE (AU); BECK THOMAS WIL) 3 January 1997 (1997-01-03) * page 17, line 13 - line 15; claims 1,3,22-25,29; figure 12 * | 1-9,13 | G01N27/42 G01N27/49 C12Q1/00 G01N33/487 |
| X | PAESCHKE M ET AL: "DYNAMIC REDOX RECYCLING OF CYTOCHROME C" JOURNAL OF THE ELECTROANALYTICAL CHEMISTRY,CH,LAUSANNE, vol. 393, no. 1/02, 1995, pages 131-135, XP000863442 ISSN: 0368-1874 | 1-3,5-8, 13 | |
| Y | * chapter "1. Introduction"; Fig.2-5 * | 4,9,12 | |
| A | PAESCHKE M ET AL: "PROPERTIES OF INTERDIGITAL ELECTRODE ARRAYS WITH DIFFERENT GEOMETRIES" ANALYTICA CHIMICA ACTA,NL,ELSEVIER, AMSTERDAM, vol. 305, no. 1/03, 1995, pages 126-136, XP000863505 ISSN: 0003-2670 * abstract * * page 127, first two paragraphs * * figure 4 * * page 131 - page 133 * | 1-3,5-8, 13 | |
| Y | US 5 269 903 A (IKARIYAMA YOSHITO ET AL) 14 December 1993 (1993-12-14) | 4,12 | |
| A | * column 10, line 60 - column 11, line 7; figure 4 * * column 14, line 24 - column 15, line 18; figure 10 * | 1,6-8 | |

-/--

TECHNICAL FIELDS SEARCHED (Int.Cl.7)
C12Q
G01N

The present search report has been drawn up for all claims

| Place of search | Date of completion of the search | Examiner |
|---|---|---|
| MUNICH | 26 June 2002 | Strohmayer, B |

CATEGORY OF CITED DOCUMENTS

X : particularly relevant if taken alone
Y : particularly relevant if combined with another document of the same category
A : technological background
O : non-written disclosure
P : intermediate document

T : theory or principle underlying the invention
E : earlier patent document, but published on, or after the filing date
D : document cited in the application
L : document cited for other reasons

& : member of the same patent family, corresponding document

EPO FORM 1503 03.82 (P04C01)

European Patent Office

# EUROPEAN SEARCH REPORT

Application Number
EP 02 07 6325

## DOCUMENTS CONSIDERED TO BE RELEVANT

| Category | Citation of document with indication, where appropriate, of relevant passages | Relevant to claim | CLASSIFICATION OF THE APPLICATION (Int.Cl.7) |
|---|---|---|---|
| Y | YAOITA M ET AL: "PULSE CHRONOAMPEROMETRIC TECHNIQUE OF ENZYME EMBODIED ELECTRODE APPLIED TO GLUCOSE MEASUREMENT INWHOLE SERUM" EXTENDED ABSTRACTS,US,ELECTROCHEMICAL SOCIETY. PRINCETON, NEW JERSEY, vol. 93/1, 1993, page 2801 XP000432870 ISSN: 0160-4619 | 9 | |
| A | * the whole document * | 1,6-8 | |
| X | ELIZABETH A. H. HALL: "Biosensors; Chapter 5: Amperometric Assay Techniques" 1990 , OPEN UNIVERSITY PRESS , BUCKINGHAM XP002203508 ISBN: 0-335-15161-2 * page 105 - page 113 * * page 135 * | 1-3,5-8, 12,13 | |
| A | US 5 366 609 A (BEATY TERRY A ET AL) 22 November 1994 (1994-11-22) * column 5, line 46 - line 65; figures 4-6 * * column 6, line 35 - column 8, line 5 * | 1,10 | TECHNICAL FIELDS SEARCHED (Int.Cl.7) |
| A | US 5 128 015 A (SZUMINSKY NEIL J ET AL) 7 July 1992 (1992-07-07) * column 3, line 47 - column 5, line 18; figure 8 * * column 7, line 10 - column 8, line 63 * | 1 | |

-/--

The present search report has been drawn up for all claims

| Place of search | Date of completion of the search | Examiner |
|---|---|---|
| MUNICH | 26 June 2002 | Strohmayer, B |

CATEGORY OF CITED DOCUMENTS

X : particularly relevant if taken alone
Y : particularly relevant if combined with another document of the same category
A : technological background
O : non-written disclosure
P : intermediate document

T : theory or principle underlying the invention
E : earlier patent document, but published on, or after the filing date
D : document cited in the application
L : document cited for other reasons

& : member of the same patent family, corresponding document

EPO Form 1503 03.82 (P04C01)

European Patent Office

# EUROPEAN SEARCH REPORT

Application Number
EP 02 07 6325

## DOCUMENTS CONSIDERED TO BE RELEVANT

| Category | Citation of document with indication, where appropriate, of relevant passages | Relevant to claim | CLASSIFICATION OF THE APPLICATION (Int.Cl.7) |
|---|---|---|---|
| A | Y. JUNG, J. KWAK: "SIMULTANEOUS DETERMINATION OF DIFFUSION-COEFFICIENT AND CONCENTRATION BY CHRONOAMPEROMETRY AT A MICRODISK ELECTRODE" BULLETIN OF THE KOREAN CHEMICAL SOCIETY, vol. 15, no. 3, 20 March 1994 (1994-03-20), pages 209-213, XP000943588 ISSN: 0253-2964 * abstract * * chapters "Introduction" and "Conclusion" * --- | 1 | |
| A | DENAULT G, MIRKIN M V, BARD A J: "DIRECT DETERMINATION OF DIFFUSION-COEFFICIENTS BY CHRONOAMPEROMETRY AT MICRODISK ELECTRODES" JOURNAL OF ELECTROANALYTICAL CHEMISTRY, vol. 308, no. 1-2, 1991, pages 27-38, XP000943549 Lausanne * abstract * * page 31, last paragraph * * page 38, paragraph 1 * --- | 1 | TECHNICAL FIELDS SEARCHED (Int.Cl.7) |
| A | SEDDON B J ET AL: "Preparation and amperometric response of carbon and platinum dual-cylinder microelectrodes" ELECTROCHIMICA ACTA,GB,ELSEVIER SCIENCE PUBLISHERS, BARKING, vol. 40, no. 4, 1 March 1995 (1995-03-01), pages 455-465, XP004020012 ISSN: 0013-4686 * abstract * * page 463, left-hand column, line 14-17; figure 5 * ----- | 1 | |

The present search report has been drawn up for all claims

| Place of search | Date of completion of the search | Examiner |
|---|---|---|
| MUNICH | 26 June 2002 | Strohmayer, B |

CATEGORY OF CITED DOCUMENTS

X : particularly relevant if taken alone
Y : particularly relevant if combined with another document of the same category
A : technological background
O : non-written disclosure
P : intermediate document

T : theory or principle underlying the invention
E : earlier patent document, but published on, or after the filing date
D : document cited in the application
L : document cited for other reasons

& : member of the same patent family, corresponding document

EPO FORM 1503 03.82 (P04C01)

## ANNEX TO THE EUROPEAN SEARCH REPORT ON EUROPEAN PATENT APPLICATION NO. EP 02 07 6325

This annex lists the patent family members relating to the patent documents cited in the above-mentioned European search report. The members are as contained in the European Patent Office EDP file on
The European Patent Office is in no way liable for these particulars which are merely given for the purpose of information.

26-06-2002

| Patent document cited in search report | | Publication date | | Patent family member(s) | Publication date |
|---|---|---|---|---|---|
| WO 9700441 | A | 03-01-1997 | AU | 712939 B2 | 18-11-1999 |
| | | | AU | 5992296 A | 15-01-1997 |
| | | | WO | 9700441 A1 | 03-01-1997 |
| | | | CA | 2222525 A1 | 03-01-1997 |
| | | | DE | 873514 T1 | 05-04-2001 |
| | | | EP | 0873514 A1 | 28-10-1998 |
| | | | JP | 11509311 T | 17-08-1999 |
| | | | US | 6284125 B1 | 04-09-2001 |
| US 5269903 | A | 14-12-1993 | JP | 1928031 C | 12-05-1995 |
| | | | JP | 6075054 B | 21-09-1994 |
| | | | JP | 63223556 A | 19-09-1988 |
| | | | JP | 1147357 A | 09-06-1989 |
| | | | JP | 2615391 B2 | 28-05-1997 |
| | | | DE | 3888767 D1 | 05-05-1994 |
| | | | DE | 3888767 T2 | 04-08-1994 |
| | | | EP | 0308514 A1 | 29-03-1989 |
| | | | WO | 8807192 A1 | 22-09-1988 |
| US 5366609 | A | 22-11-1994 | AU | 7093694 A | 03-01-1995 |
| | | | CA | 2153884 A1 | 22-12-1994 |
| | | | DE | 9422379 U1 | 23-11-2000 |
| | | | DE | 746762 T1 | 02-11-2000 |
| | | | EP | 0746762 A1 | 11-12-1996 |
| | | | ES | 2153336 T1 | 01-03-2001 |
| | | | JP | 2702286 B2 | 21-01-1998 |
| | | | JP | 8502590 T | 19-03-1996 |
| | | | WO | 9429703 A1 | 22-12-1994 |
| US 5128015 | A | 07-07-1992 | AT | 157123 T | 15-09-1997 |
| | | | DE | 68928266 D1 | 25-09-1997 |
| | | | DE | 68928266 T2 | 15-01-1998 |
| | | | DK | 221090 A | 12-11-1990 |
| | | | EP | 0406304 A1 | 09-01-1991 |
| | | | FI | 101021 B1 | 31-03-1998 |
| | | | HK | 1002833 A1 | 18-09-1998 |
| | | | NO | 301241 B1 | 29-09-1997 |
| | | | WO | 8908713 A1 | 21-09-1989 |
| | | | US | RE36268 E | 17-08-1999 |
| | | | AU | 644059 B2 | 02-12-1993 |
| | | | AU | 3343689 A | 05-10-1989 |
| | | | DD | 283683 A5 | 17-10-1990 |
| | | | JP | 2901678 B2 | 07-06-1999 |
| | | | JP | 4501309 T | 05-03-1992 |
| | | | SE | 9002930 A | 14-09-1990 |
| | | | US | 5108564 A | 28-04-1992 |

EPO FORM P0459

For more details about this annex : see Official Journal of the European Patent Office, No. 12/82

# 用于检测电流的重复电位阶跃法

一种用于检测电化学电池中还原形式或氧化形式的氧化还原物质的浓度的方法，所述电化学电池为包含工作电极和与该工作电极隔开的对电极的类型，以使对电极的反应产物到达工作电极，所述方法包括如下步骤：在所述电极之间施加电势（21）以使氧化还原物质的电氧化反应为分散控制的，测定作为时间函数的电流，评估稳态电流（23）的大小，断开并重新施加电势，再次测定作为时间函数的电流并评估稳态反电动势（25）。