May 12, 1942. R. E. YATES 2,282,551

BURNER SAFETY CONTROL

Filed Dec. 12, 1938 4 Sheets-Sheet 1

Fig. 1.

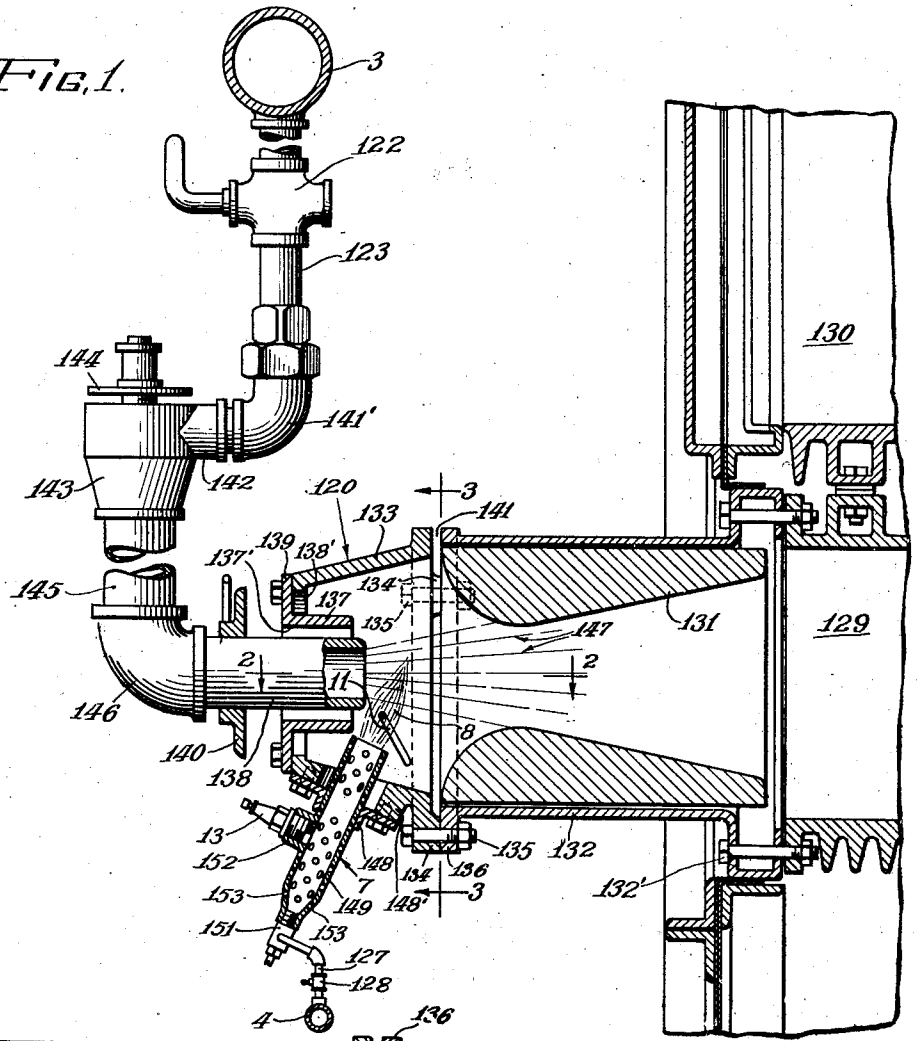

Fig. 2.

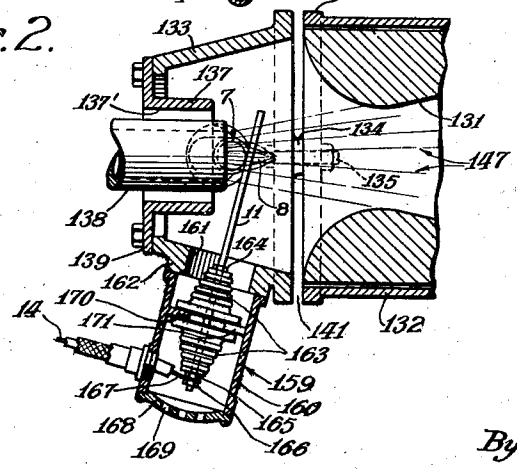

Inventor:
Robert E. Yates
By Belt, Wallace and Cannon
Attorneys

May 12, 1942. R. E. YATES 2,282,551

BURNER SAFETY CONTROL

Filed Dec. 12, 1938 4 Sheets-Sheet 2

FIG. 3.

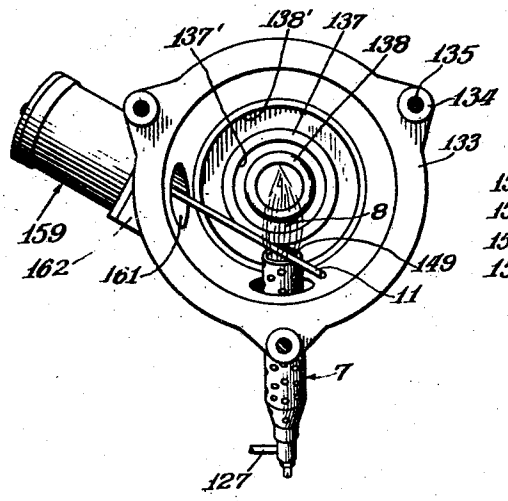

FIG. 4.

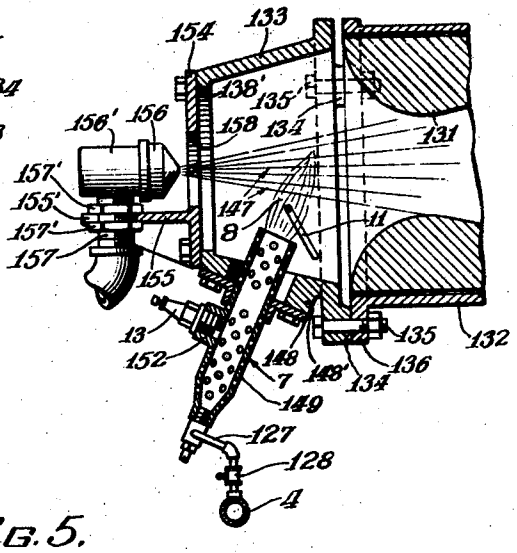

FIG. 5.

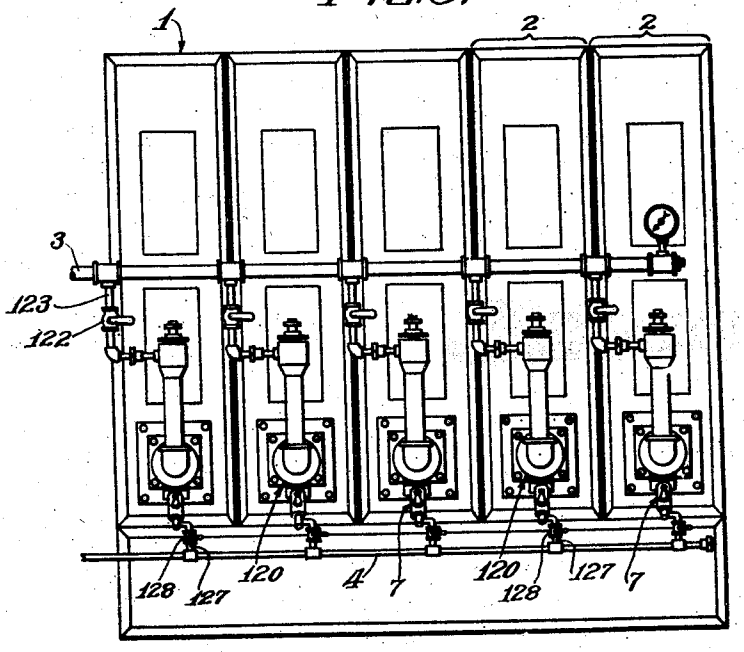

Inventor:
Robert E. Yates
By Bell, Wells and Cannon
Attorneys

May 12, 1942. R. E. YATES 2,282,551

BURNER SAFETY CONTROL

Filed Dec. 12, 1938 4 Sheets-Sheet 3

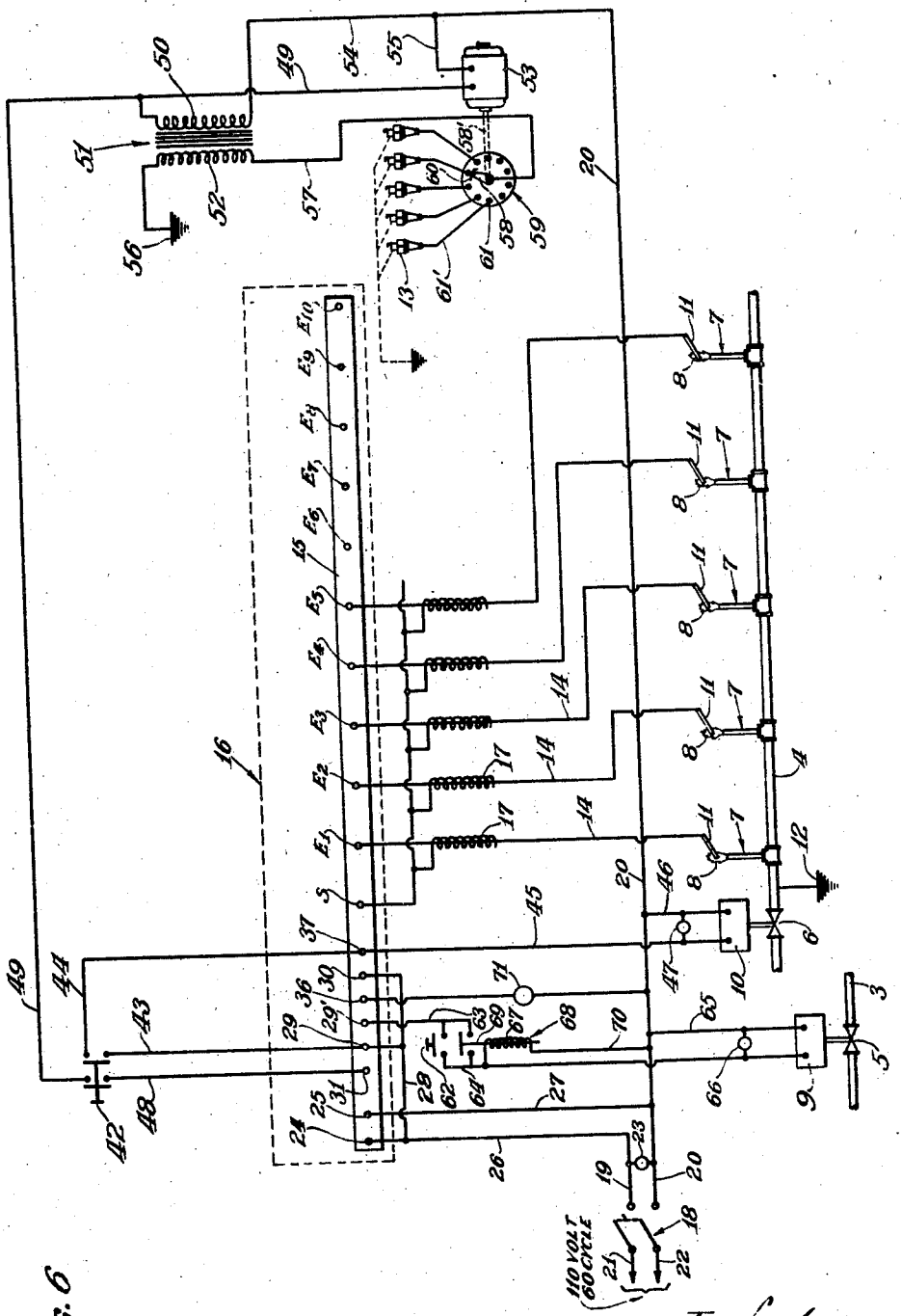

FIG. 6

Inventor:
Robert E. Yates
By Peet, Wallace and Cannon
Attorneys

May 12, 1942. R. E. YATES 2,282,551

BURNER SAFETY CONTROL

Filed Dec. 12, 1938 4 Sheets-Sheet 4

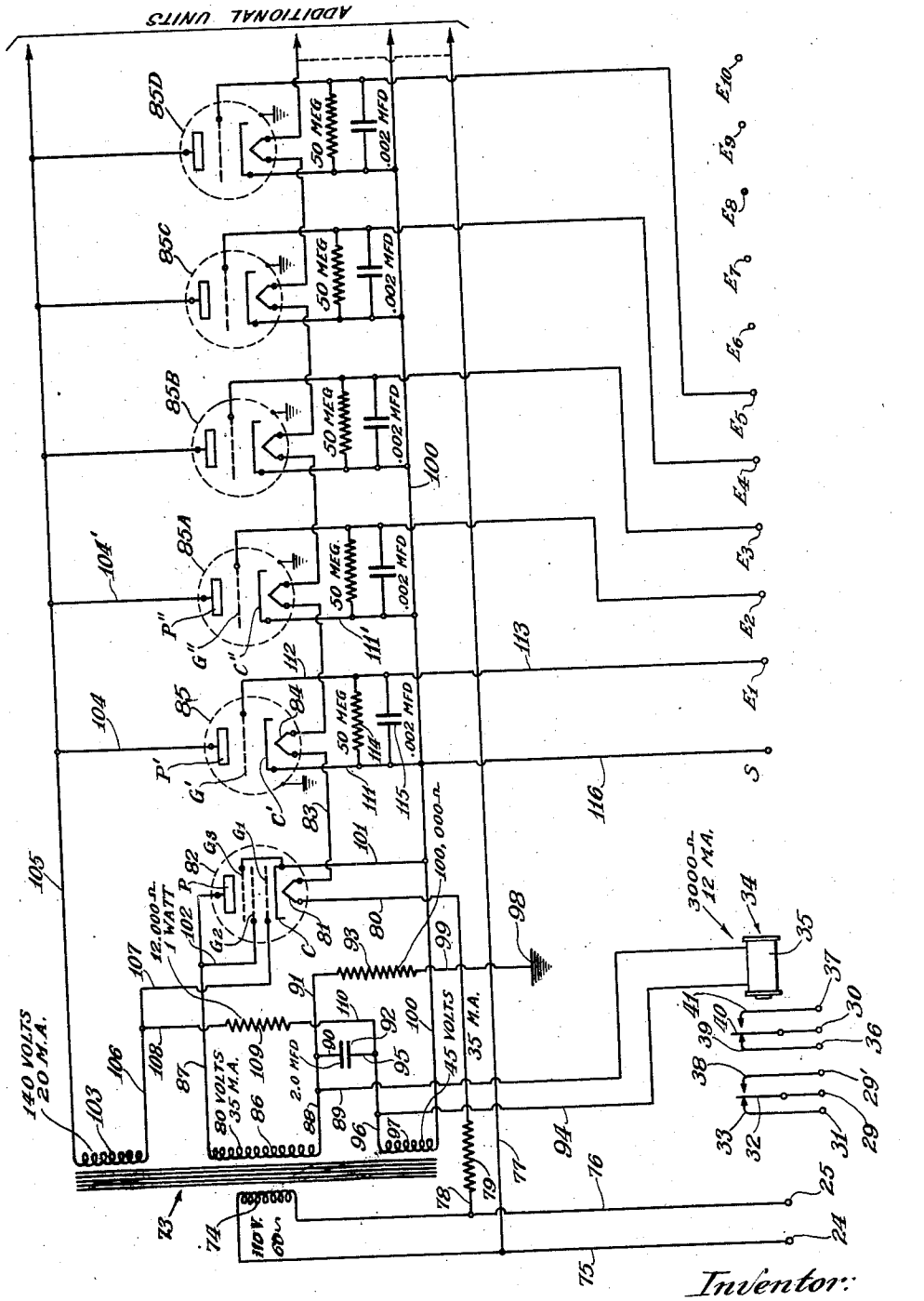

Fig. 7.

Inventor:
Robert E. Yates
By Belt, Wallace and Cannon
Attorneys

Patented May 12, 1942 2,282,551

UNITED STATES PATENT OFFICE

2,282,551

BURNER SAFETY CONTROL

Robert E. Yates, Chicago, Ill., assignor to Drying Systems, Inc., Chicago, Ill., a corporation of Illinois

Application December 12, 1938, Serial No. 245,173

7 Claims. (Cl. 158—28)

This invention relates to fuel burners or like heating devices, and particularly to safety control mechanisms for a multiple arrangement of such devices.

In many industrial drying, baking or heating systems the requisite heat is supplied by a series of individual burner units from which either a fluid heated therein or the heated products of combustion therefrom are circulated through the several parts of the system, and in some instances both such a fluid and the products of combustions are so circulated. Such individual burner units must each be equipped with safety control means to detect the presence or absence of a flame in the individual burner units, and to cause automatic interruption of the fuel feed upon failure of a flame. So to do prevents the accumulation of unburned combustible fuel in the combustion chamber and thereby circumvents the risk of explosion and like hazards.

Control means of the type described above has been heretofore proposed for single burner units. In order to avoid the duplication of parts which is necessary where such control means are used in multiple burner installations, it has been proposed, as in the co-pending application of Ralph J. Plein and Robert E. Yates, Serial No. 225,996, filed August 20, 1938, to provide a mechanical distributor arrangement whereby a single safety control means is brought under the influence of each of the individual burners in sequence. Such an installation, however, entailed the use of moving parts which were subjected to wear and which, therefore, required replacement.

It is a primary object of this invention to eliminate moving parts, and the attendant wear and replacement, in a safety control means for multiple burner installations and yet avoid any duplication of the more costly parts utilized in such control means.

Another object is to effect instantaneous shutdown of the fuel supply system upon failure of the flame at any one of the individual burner units.

A further object is to effect a shutdown of the fuel feed should a defect arise in the safety control apparatus or in the event of tampering with such apparatus.

It has been proposed heretofore to employ electron tubes in safety devices of the kind described above, but such prior devices have several disadvantages. Firstly, there is no provision to automatically close the fuel supply valves in the event that a flame-detecting means associated with any one of the individual burners is rendered inoperative due to a ground-out or other type of short circuit; or, secondly, if there is a short circuit protective feature, it has been achieved only to give rise to another disadvantage, namely, the employment of electron tubes of the double triode type in which the filaments are in parallel, and, if a filament of one flame-detecting triode should burn out, and the triode thereby "goes dead," there would be no effect manifested, in so far as the rest of the system is concerned, to indicate that a fault has occurred.

It is therefore an additional object of this invention to shut off the fuel supply in the event that either an unwanted ground or other type of short circuit develops in the flame-detecting system, or that a filament in any one of the electron tubes burns out.

A still further object is to attain the foregoing results in a novel and efficient manner, and one which will be commercially feasible.

Other objects and advantages will become apparent from the following description, taken in connection with the accompanying drawings, in which—

Fig. 1 is a vertical sectional view of a gas-fired burner unit of the kind to which my invention is applicable;

Fig. 2 is a plan sectional view taken along the line 2—2 of Fig. 1;

Fig. 3 is a sectional view taken along the line 3—3 of Fig. 1;

Fig. 4 is a vertical sectional view of an oil-fired burner unit;

Fig. 5 is a front elevation of the multiple burner installation;

Fig. 6 is a diagrammatic view illustrating the electrical connections external to the safety control unit; and

Fig. 7 is a wiring diagram showing the internal parts of the control unit.

In the preferred embodiment chosen for disclosure herein a conventional multiple unit burner system 1 is employed, which, as illustrated in Fig. 5, comprises a battery of five similarly formed heater units 2, arranged side by side, and it will be obvious that additional or fewer units can be used if desired. The heater units 2 are equipped with individual fuel burners 120 which can be of either the gas-fired type illustrated in Fig. 1, or the liquid fuel type shown in Fig. 4. As will be explained hereinafter, the differences in construction between these two types of burners have been minimized by a feature of the present invention so as to permit certain standard

parts to be used interchangeably in the two different types of burners.

The burners 120 are supplied from a common fuel source such as a main fuel supply line 3. Manually operable valves 122, Figs. 1 and 5, are preferably included in the branch pipes 123 leading from the supply line 3 to the various individual burners. A pilot fuel supply line 4 is utilized to furnish fuel to the pilot burners 7, line 4 being connected to the various pilot burners 7 through branch pipes 127 in which are included manually operable valves 128.

Considering first the burner unit shown in Fig. 1, each heater 2 has a combustion chamber 129 and a return flue or mixing chamber 130, (these being interconnected in a manner well understood in the art but not shown herein). The fuel burners 120 are positioned to discharge the fuel into the forward end of the combustion chamber 129. Each burner 120, as herein shown, is associated with a venturi 131 formed from refractory material and located within a supporting sleeve 132, and the venturi is secured in an operative relation on the forward end of the combustion chamber by bolts 132' extended between the sleeve 132 and the wall of the combustion chamber 129.

A hollow mounting casting 133 is secured to the outer end of the Venturi sleeve 132, this casting being in the general form of a truncated cone and having bosses 134 at its larger end through which bolts 135 pass to secure the casting 133 to a flange 136 at the outer end of the Venturi sleeve 132. A plate 139 is fastened to the other or outer end of the casting 133, this plate 139 having a central sleeve 137 which passes through an opening 138' at the outer end of the casting 133, and through which sleeve a main fuel discharge nozzle 138 projects so as to discharge fuel longitudinally toward the adjacent end of the venturi 131. The opening 137' in sleeve 137 is of larger diameter than nozzle 138 so as to provide for the entrance of an annular stream of air about the nozzle 138, such air supply being controlled by an adjustable baffle plate 140. Additional air may enter the venturi through the annular slot 141 formed between the flange 136 and the bosses 134. Gas is supplied to the nozzle 138 by the pipe 123 leading from the common gas line 3. At its lower end the pipe 123 has an elbow 141' which through a pipe 142 discharges the gas into a mixer 143. The mixer 143 has an upper air inlet governed by an adjustable valve plate 144, and a mixture of gas and air is discharged downwardly through the connector 145 and an elbow 146 to the nozzle 138.

In the preferred form shown herein, each burner unit 120 is equipped with means for igniting the fuel flowing from the main fuel nozzle 138, this means being shown herein as comprising an electrically ignited pilot burner 7 which projects its flame, as indicated at 6, diagonally upward and into the flame zone 147 of the main fuel nozzle. As herein shown the pilot burner 7 is mounted in a flanged sleeve 148 secured to an angularly positioned apertured pad 148' formed on the mounting casting 133.

The pilot burner 7 is preferably of the type shown and claimed in the co-pending application of Ralph J. Plein, Serial No. 223,657, filed August 8, 1938.

The fuel supply pipe 127, for the pilot burner 7, is connected to a nozzle 151 which discharges longitudinally into the reduced outer end of the burner tube 149. An internally threaded hub 152 is formed on the tube 149 outwardly of the flange 150 to receive a spark plug 13 by means of which the gaseous fuel within the burner tube 149 may be ignited. The resulting combustion of the fuel is supported by air which enters through a plurality of small ports 153 formed in the tube 149.

In the liquid fuel burner shown in section in Fig. 4, the casting 133 is identical to that similarly numbered in Fig. 1. The plate 139 and the sleeve 137 shown in Fig. 1, however, are in this instance replaced by a plate 154 having a shelf 155 on which a fuel nozzle 156 is supported in a manner now to be described. Nozzle 156 is in communication with a hollow cylindrical casting 156'. A slot 155' in shelf 155 accommodates a short continuously-threaded pipe 157, which is screwed into the cylinder 156', pipe 157 serving to supply liquid fuel to the nozzle 156 via the cylinder 156'. Pipe 157 is clamped to shelf 155 by nuts 157'.

An opening 158 is provided in plate 154 to permit the admission of the liquid fuel, in spray form, into the interior of the hollow casting 133, and also to allow air to enter therein.

In association with either of the burners illustrated in Figs. 1 or 4, there is provided, according to the present invention, safety means whereby proper operation of the burners is detected and the operation of the burners is automatically suspended upon failure of combustion. Of the many different types of detecting means which may be employed for this purpose, I have shown herein a flame detecting device 159, Figs. 2 and 3. Such a safety detecting device 159, Fig. 2, comprises a hollow mounting member 160 secured on a pad 162 on the mounting casting 133 so that an insulated rod or electrode 11 carried by the member 160 projects through an opening 161 in casting 133 and into the zone of the pilot flame 8.

Preferably the electrode 11 is replaceably mounted in an insulating structure 163 clamped permanently to a shelf 170 within the mounting member 160. That portion of the rod 11 which is enclosed in the insulating structure 163 is continuously threaded to accommodate a nut 164 which bears on the inner end of the insulating structure 163. Another nut 165 bears on the opposite, or outer, end of the insulating structure 163, to thereby firmly clamp the rod 11 in position so that it is well insulated from the surrounding metallic framework of the burner unit. The terminal 167 of the electrical conductor 14 is clamped between nut 165 and a nut 166. A cover or lid 168 having ventilating ports 169 is secured to the outer end of the hollow mounting member 160. The shelf 170 has openings 171 therein so that air will flow in through the ventilating ports 169 and along the exposed portion of the rod 11, which is preferably of a highly heat-resistant conductive material. When it is desired to remove the rod 11 for purpose of replacement, the entire flame detecting assembly 159 is unfastened from the casting 133. Cover 168 is removed from member 160, and nuts 165 and 166 are unscrewed so that the threaded end of the rod 11 may pass through the insulators 163 as rod 11 is withdrawn from the opposite end of the insulating structure. A new rod 11, which has been previously equipped with a nut 164, is then substituted and clamped in place by the nut 165. Terminal 167 may then be clamped by nut 166, cover 168 replaced, and the assembly 159 secured back on the casting 133.

With this construction flame 8 may serve as an electrical conductor to complete a circuit from electrode 11 to pilot burner 7, which circuit, as will be explained presently, is utilized to operate the novel safety control means which is included in the subject matter claimed in my present invention.

An advantage which arises from the particular construction of the hollow mounting casting 133 may now be brought out with reference to Figs. 1 and 4. It has heretofore been the practice to place the flame-detecting assembly 159 at the top of the casting 133, thereby causing an electrode such as that indicated at 11 to depend therefrom in such a manner that it is exposed both to the main flame 147 and the pilot flame 8. While this would be suitable in a gas burner, it is not a satisfactory procedure in the case of liquid fuel burners, for the reason that the atomized fuel has a tendency to collect on the electrode 11 and drip off the lower end thereof. In the present construction the electrode 11 comes in from the side of casting 133 and passes rearwardly and downwardly to pilot flame 8, as is shown in Figs. 2 and 3. The pads 148' and 162 on which the pilot burner 7 and the flame detecting device 159 are respectively mounted are spaced from each other around the periphery of the casting 133 a distance substantially equal to one-fourth of the periphery thereof.

In the liquid fuel burner shown in Fig. 4, that portion of electrode 11 which lies within the pilot flame 8 will be substantially at the fringe of the main flame 147, and yet no portion of electrode 11 lies within the flame 147. In the gas burner of Fig. 1, the fuel nozzle 138 is of relatively large diameter and since the gas flame tends to spread soon after leaving the nozzle, more so than does an oil flame, the main flame 147 will in all probability envelop a portion of the electrode 11, but, as has been indicated hereinabove, this does not interfere with the successful operation of a gas type burner. The position which is occupied by that portion of electrode 11 which lies within the interior hollow portion of casting 133 relative to pilot burner 7, is shown best in Fig. 3.

Another advantage derived from such novel construction of the casting 133 is that this same casting may be used on both gas-fired and liquid fuel types of burner units. This practice effects a substantial reduction in manufacturing costs since it reduces the number of different parts required to be made and carried in stock.

In the diagrammatic view, Fig. 6, the main fuel supply line 3 is fragmentarily represented. A normally closed valve means 5 controls the flow of the fuel through line 3 to the various branch pipes 123 leading to the individual burners 120, and a valve actuator 9, which in this instance is electrically operated, regulates the opening or closing of valve 5. Similarly, a valve means 6 and valve actuator 10 are provided on the pilot fuel supply line 4. The pilot line 4 is grounded as indicated at 12.

In carrying out the objectives of my present invention, each electrode 11 is connected by a conductor 14 to a terminal as E_1 to E_{10} inclusive, on the terminal strip 15 of the multiple safety unit generally designated by 16. Each conductor 14 is shielded by means of a shield 17, only a portion of which is shown. The various shields 17 are connected to a common terminal S on the terminal strip 15 of the multiple safety unit 16. Although only five pilot burners 7 are shown in Fig. 6, it will be manifest that the apparatus disclosed herein can accommodate a greater, or if desired, a lesser, number of burner units.

In commencing operation of the multiple burner installation a switch 18 is closed to thereby connect conductors 19 and 20 with the line wires 21 and 22 respectively. The closing of switch 18 is indicated by a lamp 23. Thereupon potential is applied to terminals 24 and 25 on the terminal strip 15 through conductors 26 and 27. A conductor 28 connects conductor 26 to terminals 29 and 30. As shown in Fig. 7, terminals 29 and 31 are normally in electrical connection with each other through the medium of contacts 32 and 33 of the relay generally indicated by 34.

To operate the valve actuator 10, the push-button 42 is pushed inwardly to thereby establish electrical connection between conductor 43 leading from terminal 29 and conductor 44 which connects to terminal 37. A conductor 45 connects terminal 37 to one terminal of the pilot valve actuator 10, the other terminal of the pilot valve actuator 10 being connected to line wire 20 by a conductor 46. An indicating lamp 47 then lights.

When the button 42 is pressed inwardly connection is also established between conductor 48 leading from terminal 31 and conductor 49 which is connected to one terminal of the primary winding 50 of the ignition transformer 51, and also to one terminal of the motor 53. Circuit is completed through the primary 50 back to line wire 20 by means of a conductor 54. The motor 53 is likewise connected to line wire 20 by a conductor 55.

The secondary winding 52 of transformer 51 is grounded at 56, the other end of this winding being connected by a conductor 57 to the rotating arm 58 of a spark distributor 59. A shaft 58' of the motor 53 is connected to arm 58. A wiping contact 60 on arm 58 establishes circuit from the secondary 52 to each of the stationary contacts as 61 in succession as the shaft 58' is rotated by the motor 53. A conductor as 61' connects the insulated electrode of each spark plug as 13, Figs. 1, 4 and 6, to one of the contacts 61. Ground for the spark plugs 13 is provided through the pilot burners 7, pilot line 4, and the ground connection at 12, Fig. 6. Thus, the spark plugs 13 are rendered operative in sequence as the wiping contact 60 touches each of the stationary contacts 61 in turn, and this serves to ignite the various pilot flames 8.

After all the pilot burners 7 have been lighted, a control relay 34, Fig. 7, will become energized, in a manner to be described, to thereby close contacts 32 and 38, and 40 and 41, and open contacts 32 and 33, and 39 and 40. This serves to break circuit to the primary 50 of transformer 51 and also to the motor 53 so that the spark distributor assembly 59 will no longer be effective to supply potential to spark plugs 13 even though the push-button 42 is still held inwardly. If the button 42 is released at this time circuit will be maintained to the pilot valve actuator 10 because of the fact that terminals 30 and 37 are now connected through contacts 40 and 41, Fig. 7. Hence, lamp 47 will stay lit after button 42 is released, indicating that the apparatus is in such condition that the main fuel supply valve 5 may now be opened.

The energization of relay 34 is indicative of the fact that the safety control apparatus, Fig. 7, is operative, which is to say, there is a pilot flame

8 at each of the electrodes 11. If lamp 47 remains lighted after button 42 is released, another push-button 62 is then pressed inwardly to thereby connect conductor 63, leading from terminal 29', with conductor 64 leading to the main valve actuator 9, circuit being then completed back to line wire 20 through a conductor 65. The closure of this circuit and the resulting opening of main valve 6 is indicated by the lamp 66. At the same time that button 62 establishes circuit between conductors 63 and 64 there will also be a circuit established to winding 67 of a relay 68, the other end of this winding being connected to line wire 20 through a conductor 70. This causes plunger 69 of relay 68 to establish a holding circuit to winding 67 and also to maintain the circuit to main valve actuator 9 so that button 62 may now be released.

If for any reason there is a flame failure at one of the electrodes 11, control relay 34, Fig. 7, will be deenergized, as will be explained presently, to thereby open contacts 32 and 33 and break the connection between terminals 29 and 29'. This serves to break the holding circuit to relay 68 which deenergizes and opens circuit to the main valve actuator 9. At the same time circuit will be broken to the pilot valve actuator 10 due to the opening of contacts 40 and 41 of relay 34. The subsequent closing of contacts 39 and 40 will establish a connection between terminals 30 and 36 and an alarm 71 will become energized. Alarm 71 may be of either the audible or visual type.

It has been stated hereinabove that relay 34, Fig. 7, is energized when there is flame present at each of the electrodes 11 and is deenergized upon the failure of any one of the pilot flames 9. The manner in which this result is accomplished will now be described in connection with the circuit shown in Fig. 7.

This arrangement embodies a transformer 73, the primary 74 of which is connected by conductors 75 and 76 to the power supply terminals 24 and 25. Conductors 77 and 78 are also connected across conductors 75 and 76 and these conductors supply the current to the filaments of the various electron tubes which are employed in the circuit. This filament supply circuit extends from conductor 78 through a resistor 79, which is for the purpose of reducing the line voltage to the desired level, thence through a conductor 80 to the filament 81 of a control tube 82. A conductor 83 connects the other side of filament 81 to one side of the filament 84 of the first flame detector tube 85, and the respective filaments of the various flame detector tubes 85A, 85B, 85C, 85D, are connected in series with each other, provision being made for a varying plurality of such flame detector tubes by varying the value of the resistance in resistor 79. If, for example, each of the tubes which are being employed has a rated filament voltage of 6.3 volts, and the line voltage is 110 volts, then, assuming as in Fig. 7 that there are six tubes altogether, it will be necessary for the resistor 79 to have such a value of resistance that the filament current which is passing through it will produce a potential drop of 110 volts minus 6 times 6.3 volts, or 72.2 volts. The return line for this series circuit is established through conductor 77. It is manifest that a greater or less number of tubes, having the same or different values of rated filament voltage, could be accommodated in the manner indicated above. So to do eliminates the necessity of having a filament winding on the transformer 73, which filament winding would have to be specially made up for each customer.

A secondary winding 86 is connected at one end to the plate P of the control tube 82 by means of a conductor 87, the other end of secondary winding 86 being connected by a conductor 88 to conductors 89, 90 and 91 which respectively lead to winding 35 of relay 34, a capacitor 92 and a resistor 93. Conductors 94 and 95 serve to connect the other sides of the winding 35 and the capacitor 92 to a conductor 96 which leads to the upper end of secondary winding 97. Resistor 93 is grounded as indicated at 98 through a conductor 99.

The lower end of secondary winding 97 connects to cathode C of control tube 82 through conductors 100 and 101. Control tube 82 is preferably of the pentode type in which a suppressor grid G_3 is joined to the cathode C. The screen grid G_2 is connected directly to plate P through a jumper 102.

A plate circuit of control tube 82 is traceable from plate P through conductor 87 to secondary 86, thence in parallel through winding 35 of relay 34 and capacitor 92 to secondary 97 and thence back to cathode C. The operation of control tube 82 is of course determined by the bias on the control grid G_1. If grid G_1 has a substantial negative bias, plate current in the above-described plate circuit of tube 82 will be cut off and relay 34 will be deenergized. When the negative bias on grid G_1 is removed, plate current will again flow and control relay 34 will be energized.

Potential for the plate circuits of the various tubes included in the circuits shown in Fig. 7 is derived from the secondary windings 86, 97 and 103 and therefore an alternating current source. In view of the use of such an alternating current source, each of the various tubes is non-conductive during the lower halves or negative portions of the alternating current cycles but is conductive during the upper half or positive cycles of the alternating current. Thus referring to the control tube 82, there will be a pulsating unidirectional current delivered to the control relay 34 when the negative bias is removed from the control grid G_1 of this tube and this is sufficient to maintain the relay 34 energized. The capacitor 92 serves to smooth out the pulsating current thus delivered to the relay 34.

A representative flame detector tube circuit will now be described. Considering the tube 85, plate P' is connected through a conductor 104 to conductor 105 which leads to the upper end of secondary winding 103 of transformer 73. Circuit to the grid G_1 of control tube 82 is provided through conductors 106 and 107. A conductor 108 leads from conductor 106 to a resistor 109 which in turn is connected to the upper end of secondary 97 by conductors 110 and 96. The plate circuit of the flame detector tube 85 is therefore traceable from plate P' through conductors 104 and 105 to secondary 103, thence through resistor 108 and secondary 97 and back to cathode C' through conductors 100 and 111.

In this connection it is to be noted that the plate circuit of tube 85A is traceable from plate P'' through conductors 104' and 105, secondary 103, conductors 106 and 108, resistor 109, conductors 110 and 96, secondary 97, and conductors 100 and 111' back to cathode C''. Likewise, the plate circuit of every other flame detector tube, as 85B, 85C, and so forth, is traceable through

the secondary 103, resistor 109, and secondary 97, so that these last-named parts are common to the plate circuits of all the flame detector tubes 85, 85A, 85B, 85C and 85D.

It is apparent that the heavier the plate current flow in the plate circuit of a flame detector tube as 85, the greater will be the potential drop through the resistor 109 and, therefore, the greater will be the tendency of this potential drop to bias the control grid G_1 of control tube 82 negatively. Thus it can be seen that an inverse relation exists in the operations of the control tube 82 and the various flame detector tubes 85, 85A, 85B, 85C and 85D, for if the plate current should increase in the plate circuit of any one of these flame detector tubes, the current in the plate circuit of the control tube 82 will be diminished, preferably to the point of cut-off of the tube 82 which would mean zero current in the circuit in which the winding 35 of the relay 34 is included, and this of course would result in release of relay 34. However, any diminishing of the current in the plate circuit of the control tube 82 below the current value required to maintain relay 34 energized will result in release of this relay, and the point of cut-off of tube 82 is well below the current value required to maintain relay 34 energized.

The grid G' of the flame detector tube 85 is connected through conductors 112 and 113 to terminal E_1 which, as has been explained hereinabove, is in communication with an electrode 11.

Likewise, grid G'' of tube 85A is connected to terminal E_2, and the grid of every other flame detector tube will be connected to its corresponding E terminal. If tetrodes or pentodes are employed instead of the triodes shown in Fig. 7, the same general scheme of connections will prevail, the terminals E_1 to E_{10} inclusive, being connected to the control grids of their corresponding flame detector tubes.

As shown in Fig. 6, each electrode 11 is connected to an E terminal, which is in turn connected to the grid of a flame detector tube as 85, Fig. 7. Negative bias for the grid G' of tube 85 is provided because of the potential drop produced by a flow of current through the parallel combination of resistor 114 and the capacitor 115 which are connected between conductors 113 and 111. This grid-biasing current flows through the grounded pilot burner 7, pilot flame 8, and electrode 11 as well as through resistor 114 and capacitor 115. The resistance of the flame is somewhat critical. With the circuit thus provided, the presence of a flame between the grounded pilot burner 7 and electrode 11 will cause the current flowing through resistor 114 and capacitor 115 to have such a phase relationship to the voltage acting between plate P' and cathode C' that the bias on grid G' will bear a phase opposition relation to this voltage. Under such conditions, current in the circuit of the plate P' will be substantially cut off and, if there is a flame present at each of the other electrodes 11, the current in the plate circuit of each of the other flame detector tubes 85A, 85B, 85C and 85D, will be likewise cut off. It will therefore be seen that when a flame is properly present at each electrode 11 the plate current flowing through the resistor 109 will be of such a small value that it will be relatively ineffective in producing a voltage drop through resistor 109 to negatively bias the control grid G_1 of tube 82.

If, however, there is a flame failure at one of the electrodes 11, the current in the plate circuit of the associated flame detector tube, say tube 85, will increase due to the removal of the negative bias from the grid as G'. This serves to so bias the tube 82 as to cut off the energizing current to the relay 34, effecting a shutdown of the system, for example, closing valves 5 and 6, Fig. 6, as has been previously explained.

Now assume that rather than a failure of the flame there has been a grounding of an electrode 11. This might occur, for example, if the electrode 11 were jarred while hot and with such force that it contacted the grounded pilot burner 7. Such an occurrence will effectively short-circuit the flame resistance in the flame-detecting circuit traceable through resistor 114 and capacitor 115. This destroys the phase opposition relation of the negative bias on grid G' to the voltage acting between cathode C' and plate P', and will permit current to be reestablished in the plate circuit of the flame detector tube to thereby restore the negative bias on grid G' of control tube 82. Energizing current to the relay 34 will therefore be cut off.

The terminal S which is connected to shielding 17 is connected inside of the multiple safety unit to the cathode return wire 100 by means of a conductor 116. If this shielding should become grounded, or if for any reason there is a short circuit between a grid as G' and a cathode as C', the resistor 114 and capacitor 115 will be shorted out of circuit and the negative bias removed from the grid as G'. The apparatus then functions as though there had been a flame failure.

Provision is also made to insure a shutdown of the fuel supply in the event that one of the tubes goes dead. It will be noted that the filaments of the various tubes are all connected in series. If one of the filaments should burn out, the current will be cut off from the filament 81 of the control tube 82 thereby cutting off the current in the plate circuit of this tube and permitting relay 34 to deenergize. If it were not for this feature, which is to say, if the filaments were connected in parallel, it would be possible for the filament of a tube as 85 to burn out and, if the flame 8 were to fail in the grid circuit of that tube, there would be no increase of current in the plate circuit of that tube and therefore the relay 34 would remain energized.

Thus, while I have illustrated and described a selected embodiment of my invention it is to be understood that this is capable of variation and modification and I therefore do not wish to be limited to the precise details set forth but desire to avail myself of such changes and alterations as fall within the purview of the following claims.

I claim:

1. In a safety control apparatus for a multiple fuel burner system having a plurality of pilot burners and associated main burners, the combination of means for regulating the supply of fuel to said pilot burners and main burners, an electron tube including a filament, a control grid and a plate, means embodied in a plate circuit of said electron tube and controlling said regulating means to enable the supply of fuel to said burners only when said electron tube is conductive, a plurality of other electron tubes each allocated to a respective one of said pilot burners and each including a filament, a control grid and a plate, a plurality of sensing devices each disposed to sense the presence or absence of a

flame in a respective pilot burner, circuit means connecting said sensing devices respectively to the grids of said other electron tubes and being so constituted and arranged that each tube is rendered nonconductive in the presence of a flame in its coresponding burner, other circuit means connecting the plates of said other electron tubes in common to the grid of the first-named tube and being so constituted and arranged that said first tube is rendered conductive only when all of said other tubes are nonconductive, and still other circuit means connecting the filaments of all of said tubes in series whereby failure of any of said filaments renders said first tube nonconductive and thereby prevents the supply of fuel to said pilot burners and said main burners.

2. In a safety control apparatus for a fuel burner system having a pilot burner and an associated main burner, the combination of means for regulating the supply of fuel to said pilot burner and main burner, an electron tube including a filament, a control grid and a plate, means embodied in a plate circuit of said electron tube and controlling said regulating means to enable the supply of fuel to said burners only when said electron tube is conductive, another electron tube including a filament, a control grid and a plate, a sensing device disposed to sense the presence or absence of a flame in said pilot burner, circuit means connecting said sensing device to the grid of said other electron tube and being so constituted and arranged that said other tube is rendered nonconductive in the presence of a flame in said pilot burner, other circuit means connecting the plate of said other electron tube to the grid of the first-named tube and being so constituted and arranged that said first tube is rendered conductive only when said other tube is nonconductive, and still other circuit means connecting the filaments of both of said tubes in series whereby filament failure in said other tube resulting in inability of said other tube to become conductive upon failure of combustion in said pilot burner renders said first tube nonconductive and thereby prevents the supply of fuel to said pilot burner and said main burner.

3. In a multiple heater system having a plurality of individual fuel burners, means for supplying fuel to all of said burners, individual spark plugs for igniting the fuel delivered to said burners, means for supplying high potential to said spark plugs and including a distributor and a driving motor therefor, said distributor operating when driven by said motor to energize said spark plugs in succession, control means for effecting concurrent operation of said fuel supply means and said motor, sensing devices for detecting the presence of flames in said burners, and governing means under the joint control of said sensing devices and responding automatically when flames are established in all of said burners to disable said motor and to regulate operation of said fuel supply means independently of said control means.

4. In a multiple heater system having a plurality of individual fuel burners, means for supplying fuel to all of said burners and including a fuel valve and electrically operated means for actuating said valve, individual spark plugs for igniting the fuel delivered to said burners, means for supplying high potential to said spark plugs and including a distributor and a driving motor therefor, said distributor operating when driven by said motor to energize said spark plugs in succession, manual control means for concurrently energizing said valve actuating means and said motor for thereby opening said fuel valve and initiating operation of said distributor, sensing devices for detecting the presence of flames in said burners, a plurality of grid-controlled thermionic tubes each allocated to a respective one of said burners, circuit means connecting said sensing devices respectively to the grids of said tubes and being so constituted and arranged that each tube is rendered nonconductive in the presence of a flame in its corresponding burner, and relay means jointly responsive to all of said tubes and controlling said valve actuating means and said high potential supply means, said relay means operating when all of said tubes are rendered nonconductive to disable said motor and to maintain said fuel valve open independently of the condition of said manual control means.

5. In a multiple heater system having a plurality of pilot burners and associated main burners, means regulating the supply of fuel to said pilot burners, means regulating the supply of fuel to said main burners, ignition means for said pilot burners, a first manually operable means controlling said pilot fuel supply means and said ignition means and effective when operated to initiate operation of said pilot burners, sensing devices for detecting the presence of flames in said pilot burners, governing means under the joint control of said sensing devices and responding automatically when flames are established in all of said pilot burners to assume an operative condition, and a second manually operable means directly governed by said governing means for controlling said main fuel supply means, said second manual means being effective when operated to enable the supply of fuel to said main burners in dependence upon the condition of said governing means whereby operation of said main burners is initiated only when both said governing means and said second manual means are operated.

6. In a multiple heater system having a plurality of pilot burners and associated main burners, means regulating the supply of fuel to said pilot burners, means regulating the supply of fuel to said main burners, ignition means for said pilot burners, a first manually operable means controlling said pilot fuel supply means and said ignition means and effective when operated to initiate operation of said pilot burners, sensing devices for detecting the presence of flames in said pilot burners, a plurality of grid-controlled thermionic tubes, means comprising a plurality of input circuits in which said sensing devices are respectively included and to which the grids of said tubes are respectively connected, said input circuit means being so constituted and arranged that a negative blocking potential is impressed on the grid included in each circuit so long as a flame is effective on the corresponding sensing device, another grid-controlled thermionic tube, means comprising a common output circuit for the first-named tubes and to which the grid of said other tube is connected, said output circuit means being so constituted and arranged that a negative blocking potential is impressed on the grid of said other tube so long as there is a substantial current flow in said common output circuit, a relay, means comprising an output circuit for said other tube and in which a winding of said relay is embodied, the last-named output circuit means being so con-

stituted and arranged that said relay assumes an operative condition only when a substantial current flow exists in said last-named circuit, and a second manually operable means governed by said relay and in turn controlling said main fuel supply means, said second manual means being effective when operated to enable the supply of fuel to said main burners only when conditioned by the operation of said relay.

7. In a multiple heater system having a plurality of pilot burners and associated main burners, means regulating the supply of fuel to said pilot burners, means regulating the supply of fuel to said main burners, individual spark plugs for igniting the fuel delivered to said pilot burners, means for supplying high potential to said spark plugs and including a distributor and a driving motor therefor, said distributor operating when driven by said motor to energize said spark plugs in succession, a first manually operable means controlling said pilot fuel supply means and said distributor motor and effective when operated to initiate operation of said pilot burners, sensing devices for detecting the presence of flames in said pilot burners, means under the joint control of said sensing devices for governing said pilot fuel supply means and said distributor motor and responding automatically when flames are established in all of said pilot burners to assume an operative condition as an incident to which said motor is disabled and the supply of fuel to said pilot burners is maintained independently of said first manual means, and a second manually operable means governed by said governing means for controlling said main fuel supply means whereby operation of said main burners is initiated only when both said governing means and said second manual means are operated.

ROBERT E. YATES.