# United States Patent [19]

**Manabe**

[11] **Patent Number: Des. 284,475**

[45] **Date of Patent: ** Jul. 1, 1986**


[54] **IMAGE SCANNER**


[75] Inventor: **Yoshiyuki Manabe,** Yamato, Japan

[73] Assignee: **IBM International Business Machines Corporation,** Armonk, N.Y.



[**] Term: **14 Years**

[21] Appl. No.: **594,041**

[22] Filed: **Mar. 27, 1984**

[30] **Foreign Application Priority Data**

Sep. 28, 1983 [JP] Japan ..... 58-41860

[52] **U.S. Cl.** ..... **D14/107**

[58] **Field of Search** ..... D14/107, 114; 235/454, 235/470; 250/566



[56] **References Cited**

U.S. PATENT DOCUMENTS

| | | | |
|---|---|---|---|
| D. 277,006 | 1/1985 | Takahashi et al. | D14/107 |
| 3,549,895 | 12/1970 | Sidorsky | 235/454 X |
| 4,179,621 | 12/1979 | Crean et al. | 250/566 |



*Primary Examiner*—Susan J. Lucas

*Attorney, Agent, or Firm*—E. Ronald Coffman


[57] **CLAIM**

The ornamental design for an image scanner, substantially as shown and described.

**DESCRIPTION**

FIG. **1** is a top, front and left side perspective view of the image scanner showing my new design, the top panel being in an open position;

FIG. **2** is a front elevational view thereof, the top panel being in the closed position;

FIG. **3** is a rear elevational view thereof;

FIG. **4** is a top plan view thereof;

FIG. **5** is a bottom view thereof;

FIG. **6** is a left side elevational view thereof, the right side being a mirror image.

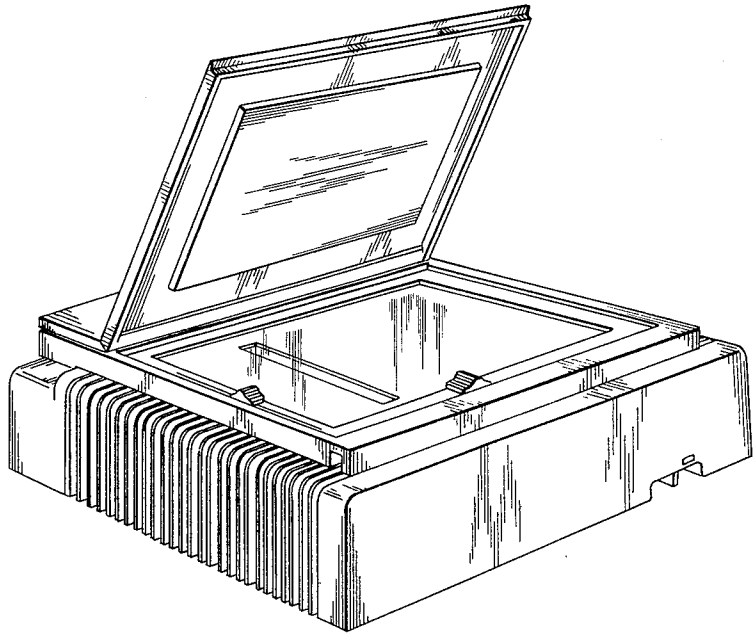

FIG. 1

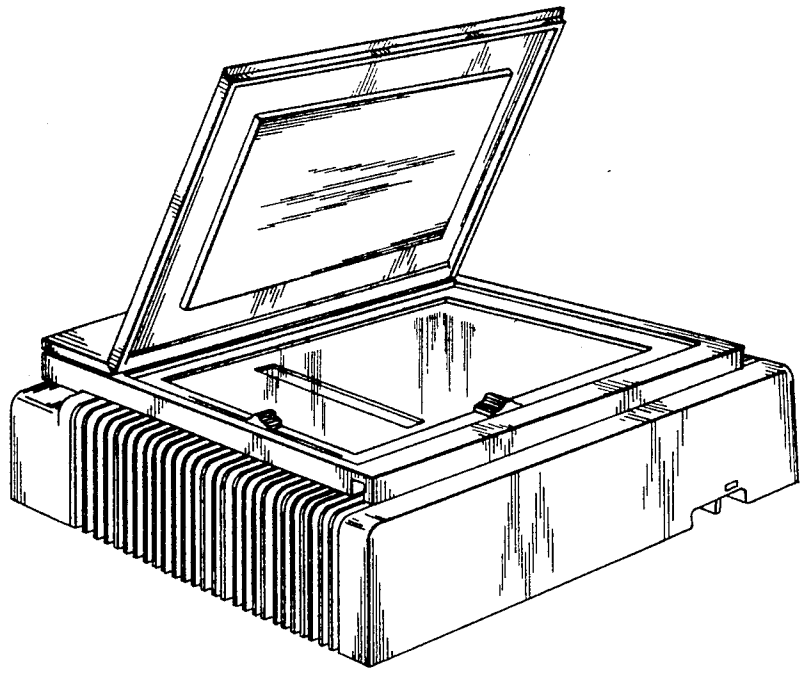

FIG. 2

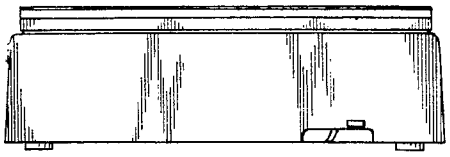

FIG. 3

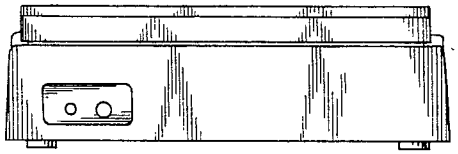

FIG. 4

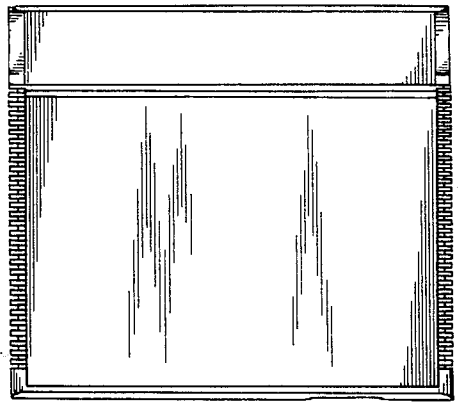

FIG. 5

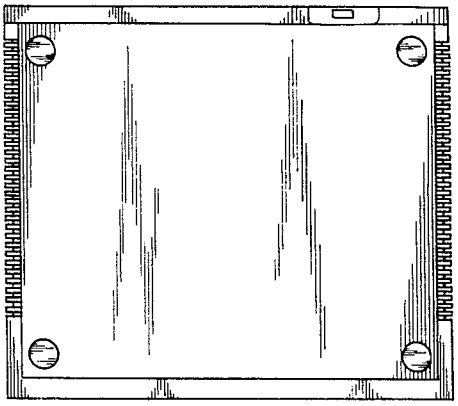

FIG. 6

