Aug. 28, 1962 S. STANDAL 3,051,120

INBOARD OUTBOARD DRIVE MECHANISM FOR BOATS

Filed May 16, 1958

7 Sheets-Sheet 1

FIG. 1

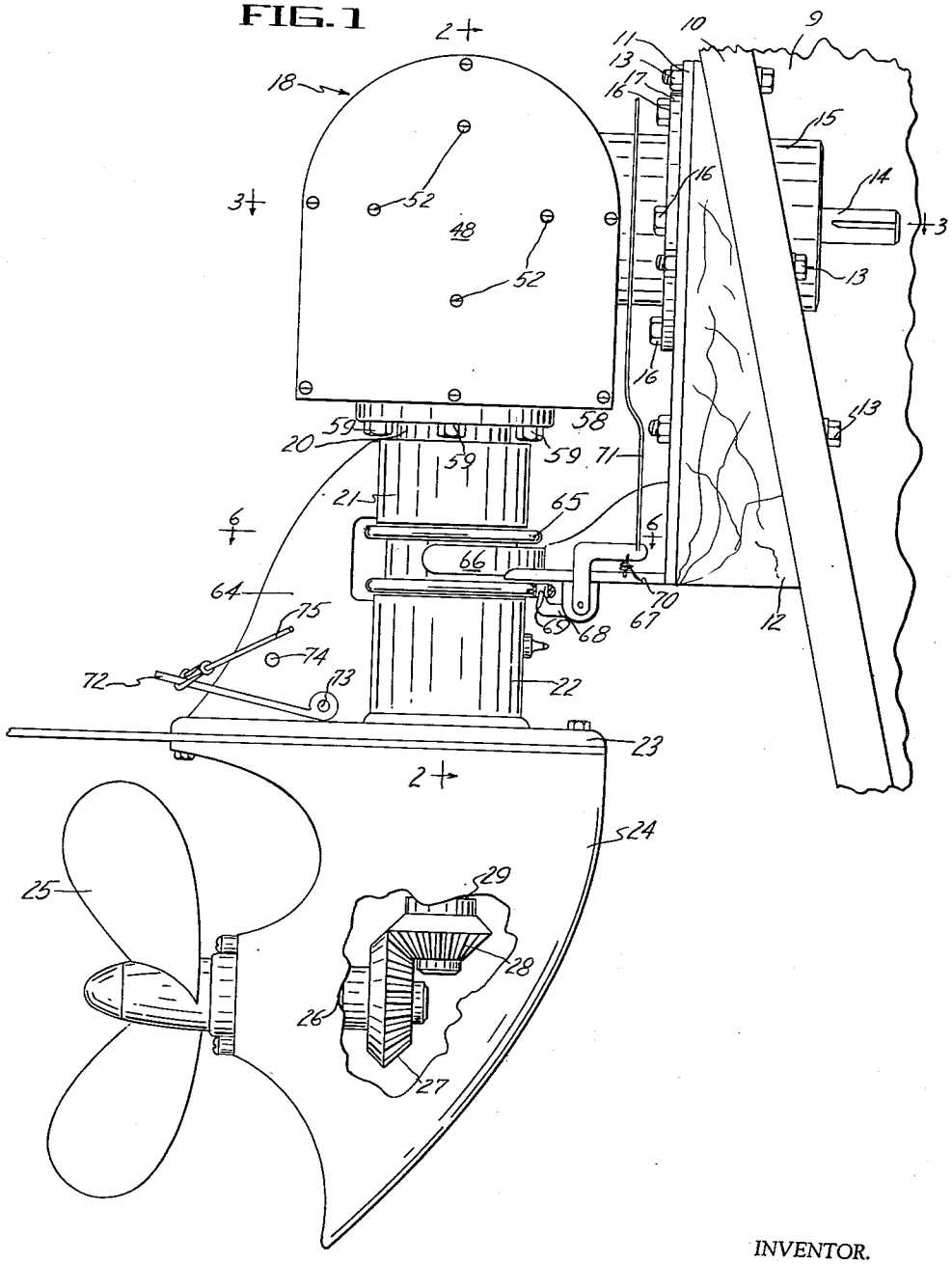

INVENTOR.
Stanley Standal
BY
Irish Wells
Atty.

Aug. 28, 1962 S. STANDAL 3,051,120

INBOARD OUTBOARD DRIVE MECHANISM FOR BOATS

Filed May 16, 1958 7 Sheets-Sheet 2

FIG. 2

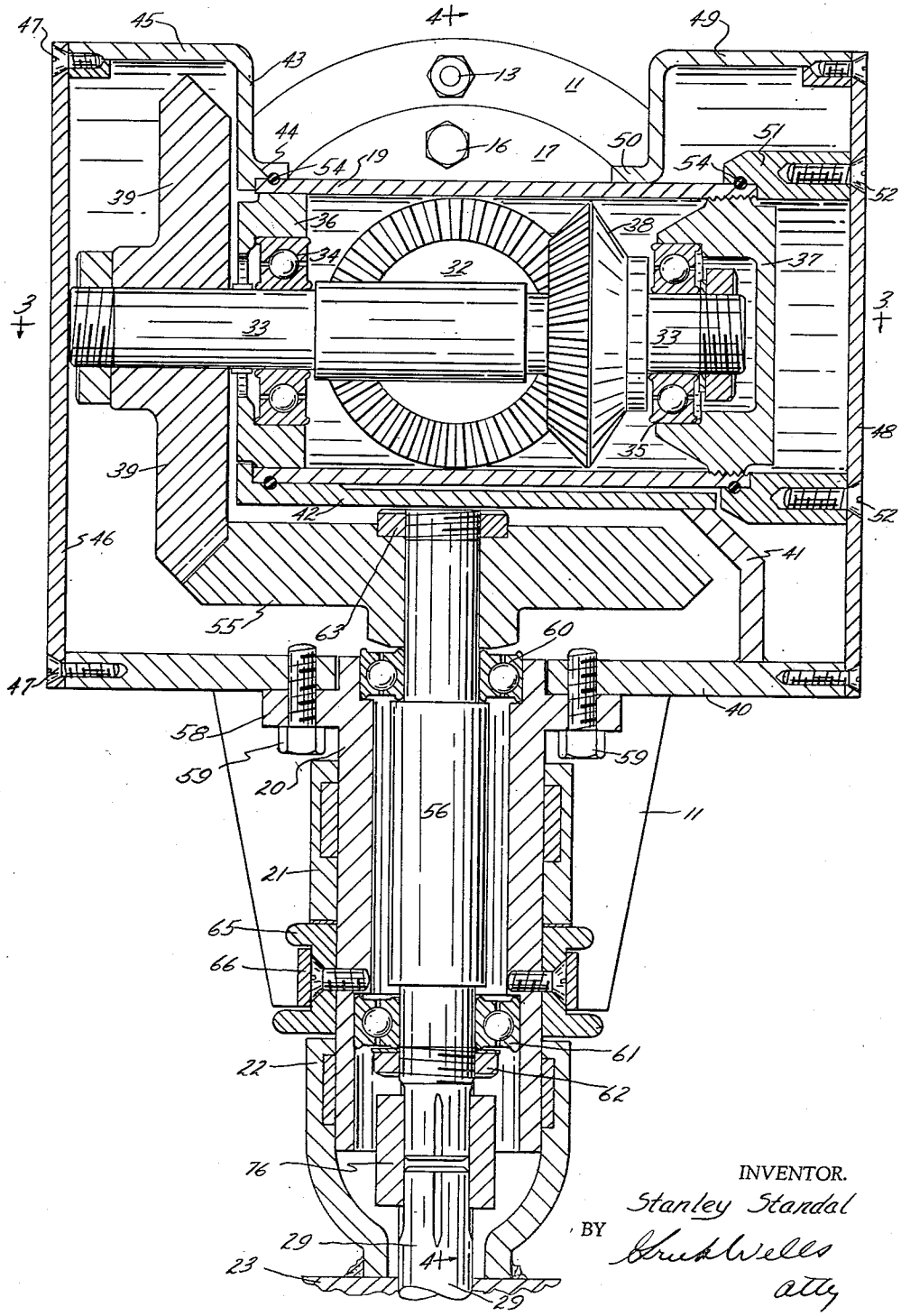

INVENTOR.
Stanley Standal
BY
Chas. A. Wells
atty

Aug. 28, 1962 S. STANDAL 3,051,120

INBOARD OUTBOARD DRIVE MECHANISM FOR BOATS

Filed May 16, 1958

7 Sheets-Sheet 3

FIG. 3

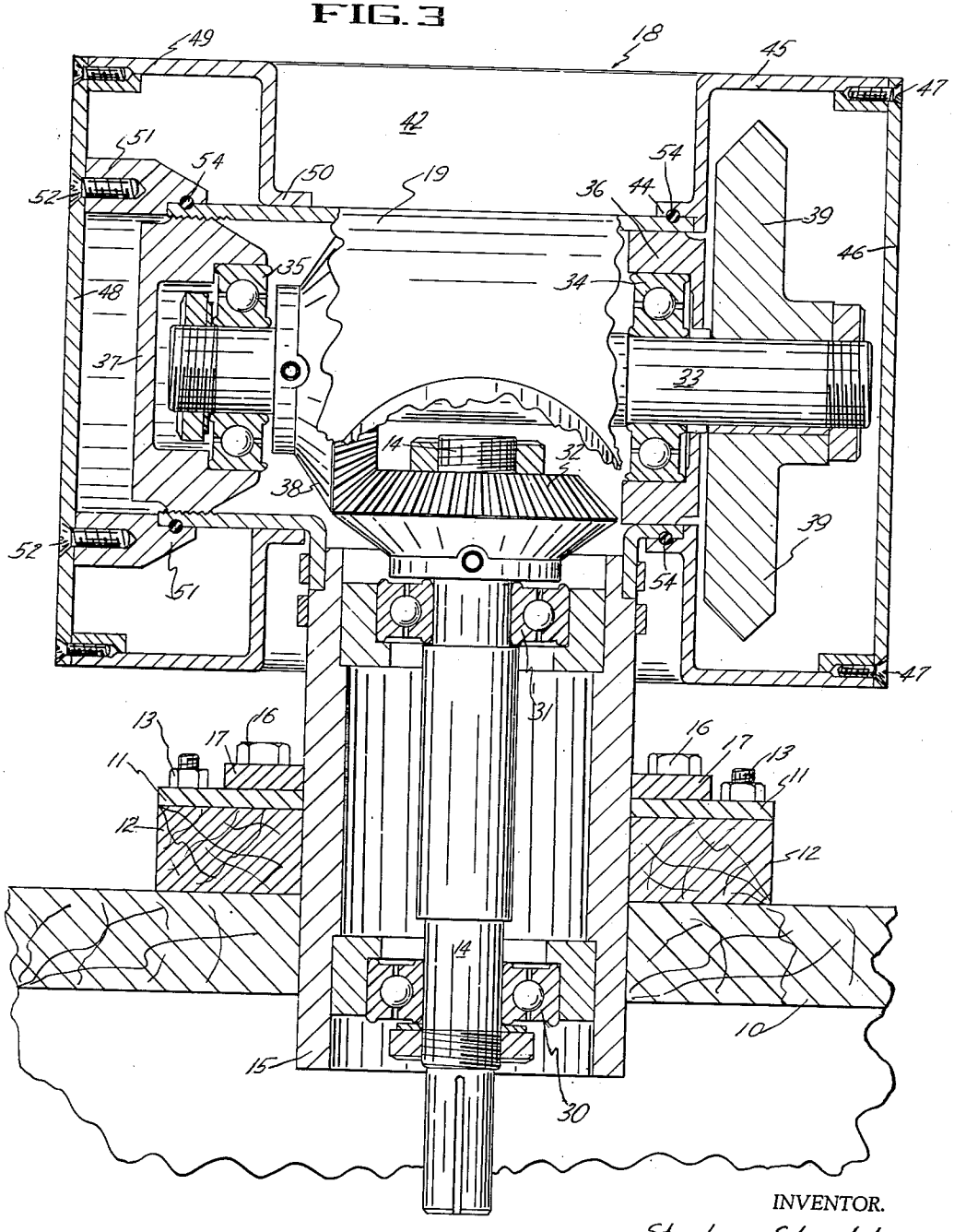

INVENTOR.
Stanley Standal
BY Grubb Wells
atty

Aug. 28, 1962 S. STANDAL 3,051,120

INBOARD OUTBOARD DRIVE MECHANISM FOR BOATS

Filed May 16, 1958 7 Sheets-Sheet 4

FIG. 4

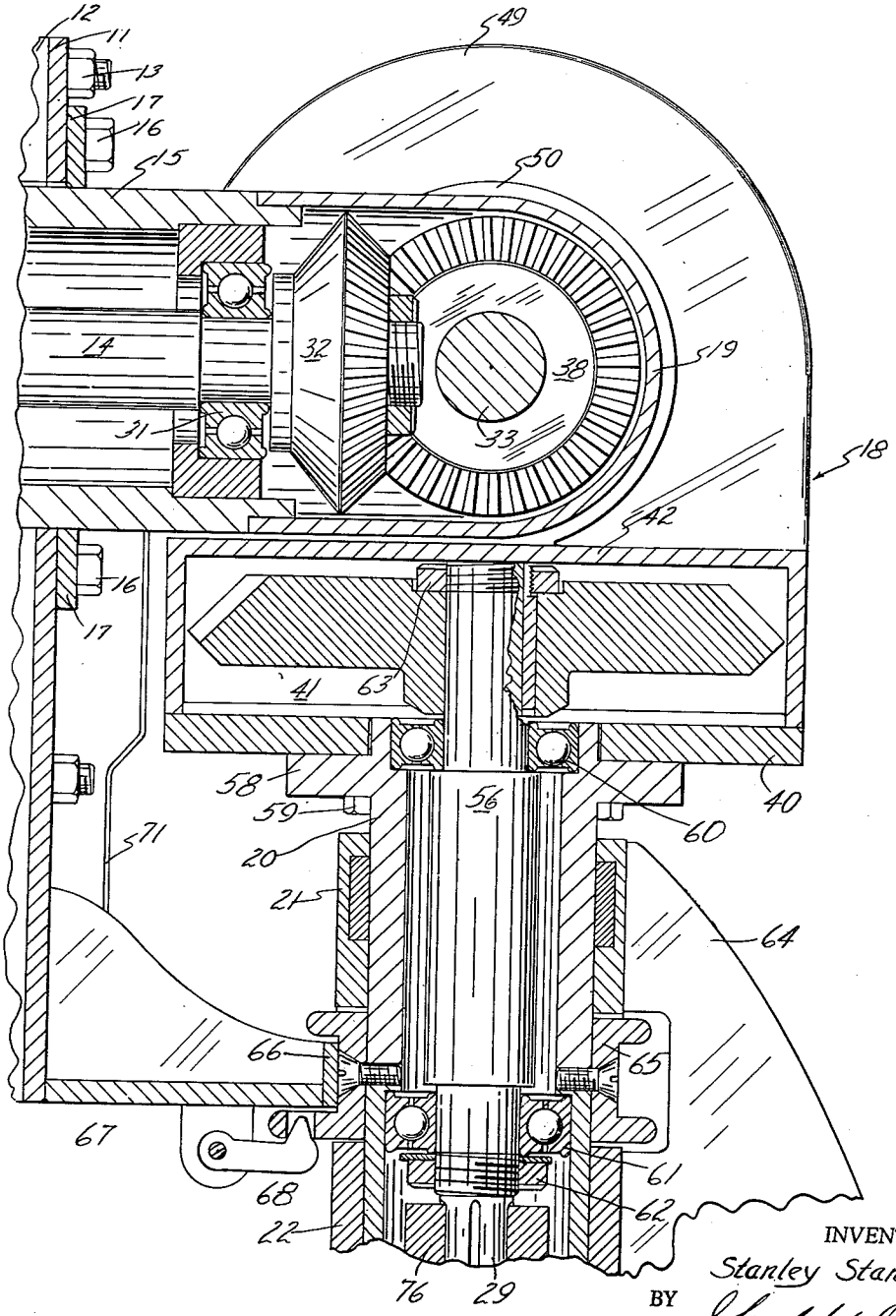

INVENTOR.
Stanley Standal
BY
Shenk Wells
atty.

Aug. 28, 1962 S. STANDAL 3,051,120

INBOARD OUTBOARD DRIVE MECHANISM FOR BOATS

Filed May 16, 1958 7 Sheets-Sheet 5

FIG. 5

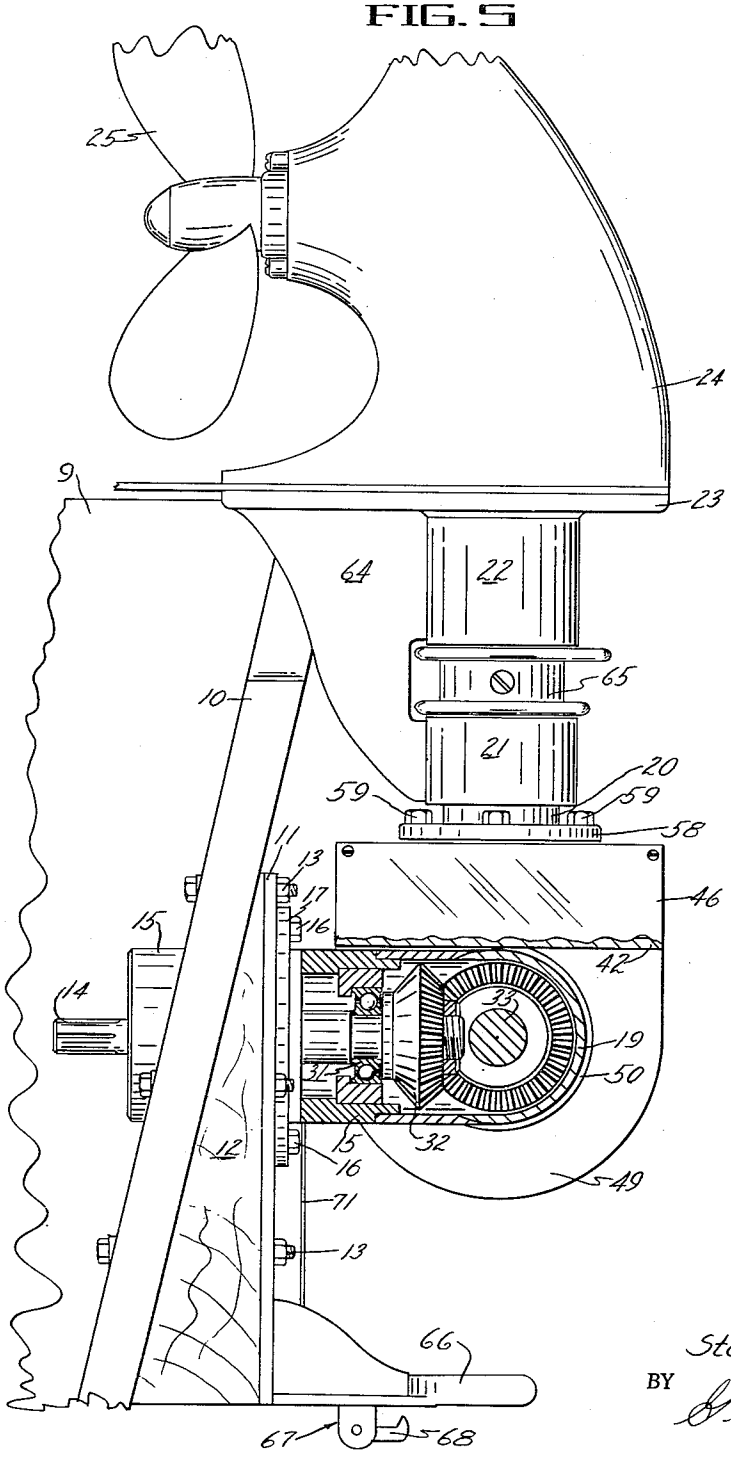

INVENTOR.
Stanley Standal
BY Greek Wells
Atty

Aug. 28, 1962 S. STANDAL 3,051,120

INBOARD OUTBOARD DRIVE MECHANISM FOR BOATS

Filed May 16, 1958 7 Sheets-Sheet 6

FIG. 6

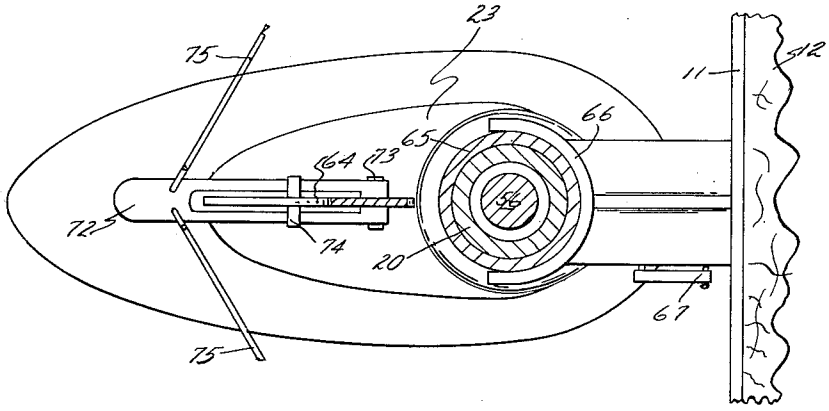

FIG. 8

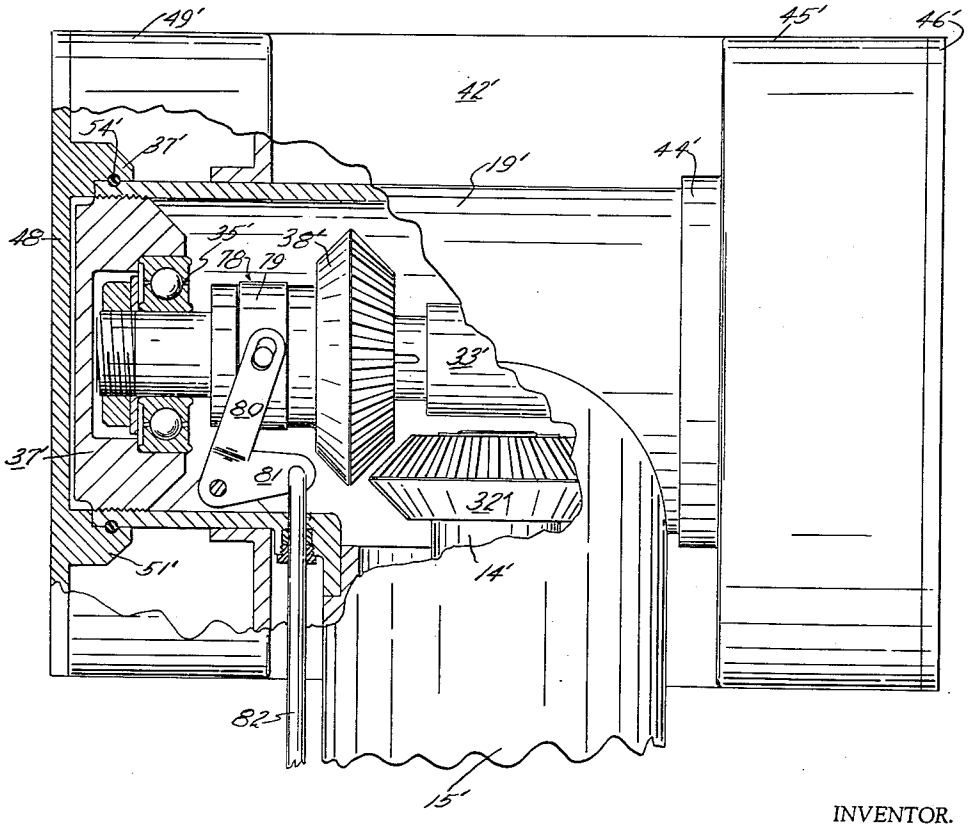

INVENTOR.

Stanley Standal

BY Greenwells

atty

Aug. 28, 1962 S. STANDAL 3,051,120

INBOARD OUTBOARD DRIVE MECHANISM FOR BOATS

Filed May 16, 1958 7 Sheets-Sheet 7

FIG. 7

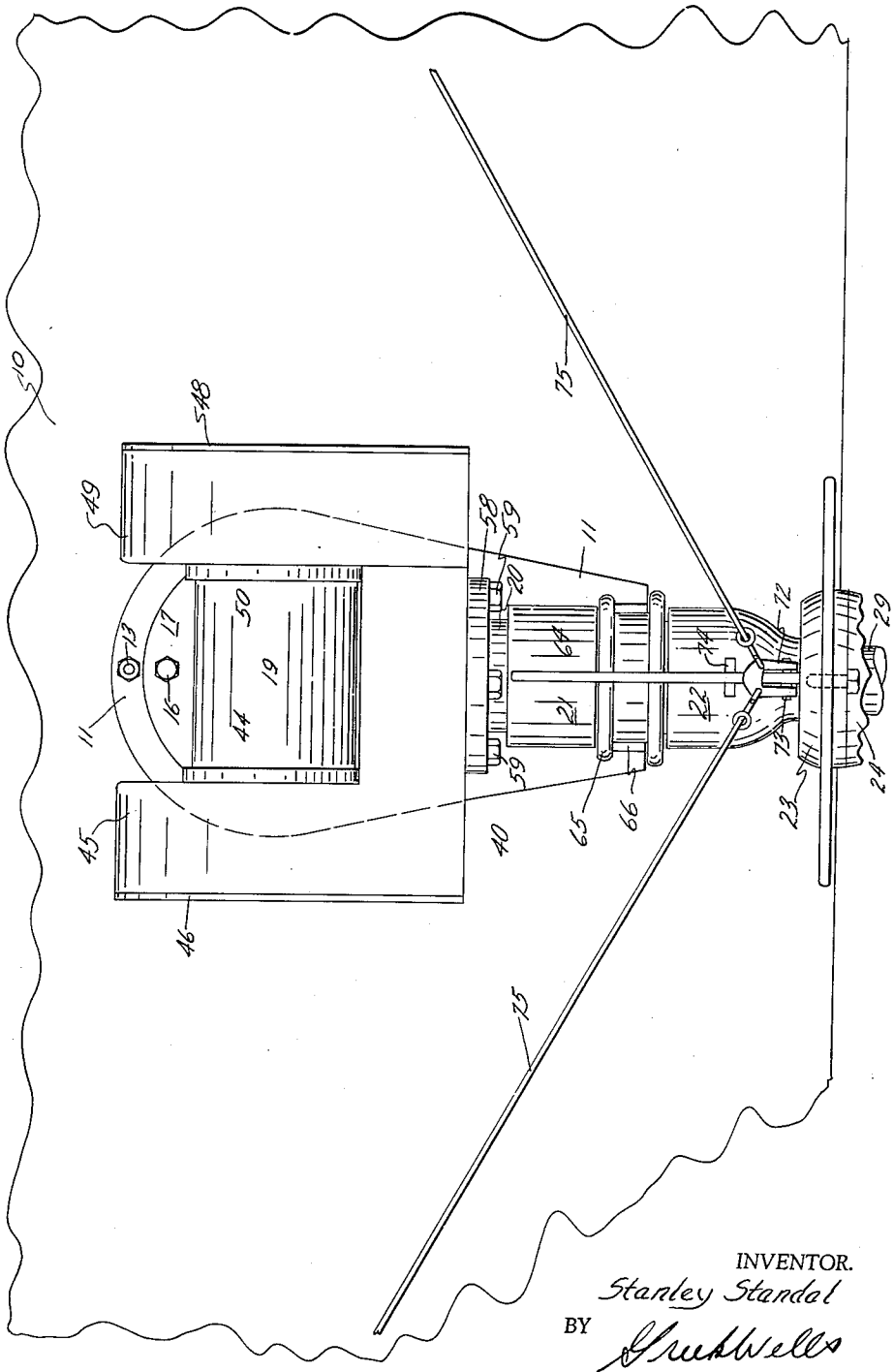

INVENTOR.
Stanley Standal
BY
Grubb Wells
Atty.

United States Patent Office 3,051,120
Patented Aug. 28, 1962

3,051,120

INBOARD OUTBOARD DRIVE MECHANISM FOR BOATS

Stanley Standal, S. 1104 Ray, Spokane, Wash.; Elizabeth V. Standal, executrix of the estate of said Standal, deceased

Filed May 16, 1958, Ser. No. 735,903
8 Claims. (Cl. 115—41)

This invention relates to an inboard outboard drive for boat propellers. As now constructed outboard motors for boats have certain advantages on craft, but also have certain disadvantages especially when the power requirements run up to forty horsepower and above. One of the advantages of an outboard motor as they are commonly built is that their propellers can be swung back and up to avoid breakage when passing over hidden obstructions in the water and to clean and repair them if they become fouled or damaged. Much of this advantage is offset, however, by the fact that the entire motor and propeller assembly load is on the boat transom. In the larger outboard motors the weight is considerable and they are difficult to handle. Another fact is the fuel efficiency of the outboard when compared with a good inborad marine motor.

It is the purpose of my invention to provide a drive mechanism adapted to support and drive a propeller with means whereby it may be connected to a drive shaft extending through the transom of a boat from an inborad motor, and mount the propeller so it may be swung and raised in the same manner as the propeller of an outboard motor but without having the motor weight as a part thereof.

More particularly is it a purpose of my invention to provide a drive mechanism for a propeller with means to connect it to a drive shaft of an inboard motor over or through the boat transom and with means to mount it on the boat transom for swinging movement while so connected, to move the propeller from a position to operate in the water to an inverted position above the drive shaft connection.

My invention is embodied in a drive and support mechanism which embodies a mounting bracket that is applied to the boat transom around a shaft that extends over or through the transom from an inboard motor. This mechanism provides a tubular T-fitting on the bracket, housing the shaft and gearing connecting it to a cross shaft. A propeller support is pivoted on the tubular fitting and carries connections for connecting the cross shaft to the propeller. The bracket carries a spring latch that normally holds the propeller in running position but will release the propeller to allow it to swing rearwardly and upwardly if an obstruction is encountered.

The nature and advantages of my invention will appear more fully from the following description and the accompanying drawings illustrating a preferred form of the invention. While these drawings illustrate a preferred form of the invention minor changes may be made within the scope of my invention as defined by the claims.

In the drawings:

FIGURE 1 is a side view of the inboard outboard drive showing it applied to the transom of a boat;

FIGURE 2 is an enlarged sectional view taken on the line 2—2 of FIGURE 1;

FIGURE 3 is an enlarged sectional view taken on the line 3—3 of FIGURE 1;

FIGURE 4 is a sectional view taken on the line 4—4 of FIGURE 2;

FIGURE 5 is a side view looking at the device from the opposite direction to FIGURE 1 and showing the propeller raised to inverted position;

FIGURE 6 is a sectional view taken on the line 6—6 of FIGURE 1;

FIGURE 7 is a view looking at FIGURE 1 from the left, the propeller being broken away; and

FIGURE 8 is a fragmentary sectional view illustrating a modification.

Referring now to the drawing, the boat transom is indicated at 10. This transom has a bracket 11 affixed thereto, the bracket being positioned at the proper angle with respect to the transom by a wedge shaped spacer 12. Bolts 13 are used to fasten the bracket to the transom. A drive shaft 14 is mounted in a tubular fitting 15 that extends through the transom and is bolted to the bracket 11 by bolts 16 extending through a flange 17 on the fitting 15. A propeller support 18 is pivoted on the tubular cross member 19 which forms a part of the fitting 15. The support 18 has a stem 20 extending downward and has mounting sleeves 21 and 22 which carry a base plate 23 on which a propeller gear housing 24 is secured. A propeller 25 has its shaft 26 journalled in the housing and suitably connected by gears 27 and 28 to a shaft 29 which is driven by a mechanism to be described later, from the shaft 14. The shaft 14 is adapted to be connected by any suitable means (not shown) to a motor within the boat 9.

According to my invention the support 18 which carries the propeller and its drive gearing is also mounted upon the fitting 15 so that it can be readily moved from the position shown in FIGURE 1 to the position shown in FIGURE 5 so as to make the propeller available for clearing anything that fouls it or for ready replacement. The construction by which this is accomplished is more clearly shown by FIGURES 2, 3 and 4, which illustrate the detailed construction of the support 18. The shaft 14 is journalled in the fitting 15 by suitable bearings 30 and 31 and extends into the cross member 19 of the fitting 15 where it is provided with a gear 32. The cross member 19 has a shaft 33 supported therein by bearings 34 and 35. The bearing 34 is mounted in a block 36 fixed at one end of the member 19. At the other end of the member 19 is a block 37 which is threaded into the member 19 and carries the bearing 35. The shaft 33 has a gear 38 thereon meshing with the gear 32. The gear 38 is fixed to the shaft 33 adjacent to the bearing 35. The shaft 33 projects beyond the member 19 through the bearing 34 and has a gear 39 keyed thereto.

The support 18 embodies a base 40, a web 41, a flat ledge 42 which terminates in an upstanding portion 43 that provides a rim 44 to seat one end of the member 19, and a housing flange 45 that extends from the base 40 up over the gear 39. An end plate 46 is fastened to the flange 45 and the base 40 by screws 47.

To carry the support 18 on the member 19 at the end opposite the flange 44 an end plate 48 is secured to the base 40. This end plate 48 has a housing member 49 that is substantially an inverted U-shaped, with a flange 50 engaging the member 19. A ring 51 is secured to the end plate 48 by screws 52 and this ring has a seat at 53 receiving the end of the member 19. Suitable O-rings 54 are provided at the ends of the member 19 as seals, between these ends and the members 44 and 51. Thus it is evident that the base 40 and the parts carried thereby are actually pivoted on the cross member 19 so that they can rotate between the position shown in FIGURE 1 and the position shown in FIGURE 5. The web 41, of course, extends along the side edges of the member 42 to meet the housing flange 45. Thus there is a sealing chamber around the gear 39 and a gear 55 which lies beneath the ledge 42 and meshes with the gear 39.

The gear 55 is keyed to a shaft 56 which is coupled to the shaft 29 that carries the gear 28 (see FIGURE 1). The shaft 56 is journalled in a sleeve 20 which has a flange 58 thereon that is bolted to the base 40 by bolts

59. The sleeve 20 carries an upper bearing 60 for the shaft 56 and a lower bearing 61 for the shaft. A nut 62 on the lower end of the shaft 56 and a similar nut 63 on the upper end of the shaft, secure the bearing in place.

In order to swivel the propeller gear housing 24 and its mounting plate 23 on the sleeve 20 so that the propeller may be turned for steering purposes, the two sleeves 21 and 22 are journalled on the sleeve 20. These sleeves are connected by a rib 64. This rib 64 is also connected rigidly to the mounting plate 23. Between the sleeve 21 and 22 a flanged ring 65 is fixed on the sleeve 20. This ring receives a yoke 66 which projects out from the bracket 11 and serves to limit the movement of the sleeve 20 toward the boat. The yoke 66 also carries a latch mechanism which includes a finger 68 that is adapted to seat in a notch 69 provided on the lower flange of the ring 65. The latch is spring pressed by a spring 70 to urge the finger 68 into the notch 69 and thus oppose movement of the sleeve 20 away from the bracket 11, but allows the sleeve to swing away in case the gear housing 24 strikes an obstruction. A manual release connection 71 is provided to the latch 67 so that the latch can be released whenever it is desired to manually lift the propeller to the position shown in FIGURE 5.

Turning of the propeller for steering purposes is accomplished by means of a yoke 72 which is mounted on the rib 64 by pivots 73 and which can swing up against stops 74 that are provided on the rib 64. As shown in FIGURE 7 of the drawings, steering cables 75 extend downwardly and inwardly from the upper part of the transom and connect with the yoke 72. Steering is thus accomplished in a simple manner by using steering cables such as are frequently used by outboard motors.

The coupling between the shaft 56 and the shaft 29 is made by means of a coupling sleeve 76 which fits over the splined ends of the two shafts. The sleeve 76 is pinned to the shaft 56. The lower end of the sleeve 22 is streamlined by being flattened as shown, in order to reduce the water resistance. In order to remove the propeller and its gearing, the gear housing 24 can be separated from the plate 23 and the shaft 29 will then drop out of the sleeve 76.

If one desires to have the mechanism equipped with a clutch instead of having a clutch in the connection from the inboard motor to the shaft 14, a clutch can be incorporated on the transfer shaft 33' as illustrated in FIGURE 8 of the drawings. This is done by providing a grooved hub 78 on the gear 38', slidably keeping it on the shaft 33'. Then a pin carrying ring 79 is mounted on the hub 78 and is operated by a yoke 80 that in turn is operated by an arm 81 and a link 82 that extends into the boat.

In the use of my new inboard outboard drive mechanism, all of the advantages of the outboard construction with regard to having a propeller that can be swung back and up to clear obstructions, or to remove any material that fouls the propeller, are retained. In addition, my drive mechanism provides adequate connection to utilize a high powered motor within the boat to drive an outboard propeller. The supporting mechanism is such that the drive elements are essentially freed of the load of the propeller. It is also such that all of the driving elements may be encased in oil or grease to protect them from corrosion and to lubricate them.

Having thus described my invention, I claim:

1. An outboard drive mechanism for boats adapted to drivingly connect a propeller shaft to a shaft within the boat and mount the propeller for swinging movement between a lowered water engaging position and a raised position above the water, said mechanism comprising a bracket having means to secure it to a boat transom, a tubular T-fitting affixed to said bracket having its stem extending through the bracket, a propeller support pivoted on the cross member of said fitting, a stem depending from said support, a propeller gear housing pivoted on said stem, a propeller, a propeller shaft carrying said propeller and journalled in said housing, drive means connected to said propeller shaft and extending upwardly through said last named stem, a cross shaft journalled in the cross member, means connecting said drive means to said cross shaft, a drive shaft journalled in the stem of said T-fitting and means connecting the drive shaft to the cross shaft, said drive shaft and said drive means being maintained in a single vertical plane with respect to the boat.

2. The invention defined in claim 1 wherein said propeller support comprises a housing enclosing both ends of the cross member and the means connecting said drive means to said cross shaft are enclosed in the last named housing.

3. The invention defined in claim 1 together with mean on the bracket and the stem depending from the support cooperating releasably to prevent the support from turning on said cross member.

4. An outboard drive mechanism for boats adapted to drivingly connect a propeller shaft to a shaft within the boat and mount the propeller for swinging movement between a lower water engaging position and a raised position above the water, said mechanism comprising a tubular fitting, means to mount said fitting on a boat transom, a shaft extending into the fitting from the boat end of said fitting, said fitting having a tubular cross member affixed thereto, a cross shaft in, and journalled at each end of, said tubular cross member and projecting from one end thereof, gear means in said cross member drivingly connecting said shafts, a propeller support pivoted on said tubular cross member and having a depending hollow stem, a propeller gear housing, means pivoted on said stem and supporting said propeller gear housing, a propeller shaft extending from said gear housing, shaft means drivingly connected to the porpeller shaft in said housing and extending up through said stem into the propeller support and means in said support drivingly connecting said shaft means to the projecting portion of said cross shaft, said first shaft and said shaft means being always maintained in a single vertical plane with respect to the boat.

5. An outboard drive mechanism for boats adapted to drivingly connect a propeller shaft to a drive shaft within the boat and to mount the propeller for vertical swinging movement between a lower water engaging position and a raised position above the water, said mechanism comprising a tubular fitting having a stem joined with an integral cross member, means to mount said fitting on a boat transom with said cross member parallel to the transom, a shaft extending through the stem of the fitting into the cross member thereof, bearing means mounted within each end of the cross member, a cross shaft journalled within said bearing means and projecting beyond one end of said cross member, gear means within the cross member drivingly connecting said shafts, a propeller support pivoted on said tubular cross member and having a depending hollow stem, a propeller gear housing, means pivoted on said hollow stem and supporting said propeller gear housing, a propeller shaft extending from said propeller gear housing, shaft means drivingly connected to the propeller shaft in said housing and extending through said hollow stem into said propeller support and gear means in said propeller support outside said cross member drivingly connecting said shaft means to the projecting portion of said cross shaft.

6. A boat propulsion unit of the character described and including, a frame adapted to be attached to the boat, a drive shaft carried by the frame on a longitudinally disposed axis, an arm shiftable relative to the frame to support a propeller assembly, a driven shaft carried by the arm to operate said propeller assembly, means pivotally joining the arm to the frame on a substantially

horizontal transverse axis, an intermediate shaft on an axis coincidental with the axis of said means, the axis of the driven shaft being normal to the axis of the intermediate shaft to swing in a plane substantially coincidental with the axis of the drive shaft, and a gear drive having a pair of angularly related gears with one gear carried on the drive shaft and the other on the intermediate shaft and having a pair of angularly related gears with one gear carried on the intermediate shaft and the other on the driven shaft.

7. An outboard drive mechanism for boats adapted to drivingly connect a propeller shaft to a drive shaft within the boat, comprising a tubular fitting having a hollow stem opening to an integral hollow cross member, said fitting being fixed to a boat transom and extending rearwardly therefrom with said hollow cross member located in a horizontal position parallel to the transom, an input shaft rotatably journalled within the hollow stem of said fitting, said input shaft being operatively driven by the boat drive shaft, a cross shaft rotatably journalled within the hollow cross member of said fitting and projecting outwardly beyond one end thereof, a propeller support enclosing the ends of the cross member pivotally supported by said fitting for pivotal motion about the central longitudinal axis of said cross shaft, said propeller support including a depending hollow stem, a propeller assembly mounted at the outer end of the hollow stem of said propeller support and including the driven propeller shaft, an intermediate shaft rotatably mounted within the depending hollow stem, said intermediate shaft being operatively connected to the propeller shaft, first gear means located within said tubular fitting operatively connected to said input shaft and said cross shaft, and second gear means located within said propeller support

operatively connected to said cross shaft and said intermediate shaft.

8. An outboard drive mechanism for boats adapted to drivingly connect a propeller shaft to a drive shaft within the boat, comprising a tubular fitting having a hollow stem opening to an integral hollow cross member, said fitting being fixed to a boat transom and extending rearwardly therefrom with said hollow cross member located in a horizontal position parallel to the transom, an input shaft journalled within the hollow stem adapted for driving connection to the drive shaft, a cross shaft rotatably journalled within the hollow cross member and projecting from one end thereof, a hollow propeller support having upstanding hollow end portions into which the ends of the hollow cross member extend, said end portions rotatably mounting the support upon the cross member and enclosing the ends of the cross member, said hollow propeller support including a cross chamber opening into the hollow end portion enclosing the end of the cross member from which the cross shaft projects and including a depending hollow stem opening to said cross chamber, a propeller assembly mounted at the lower end of the hollow stem and including the driven propeller shaft, power transmitting means supported in said hollow propeller support and connecting the driven propeller shaft to the cross shaft, and a second power transmitting means in the tubular fitting connecting the cross shaft to the input shaft.

References Cited in the file of this patent

UNITED STATES PATENTS

1,845,712	Jacques	Feb. 16, 1932
1,943,323	Johnson	Jan. 16, 1934