Feb. 19, 1946. R. H. GODDARD 2,395,114

ROTATING COMBUSTION CHAMBER FOR ROCKET APPARATUS

Filed Oct. 12, 1942 2 Sheets-Sheet 1

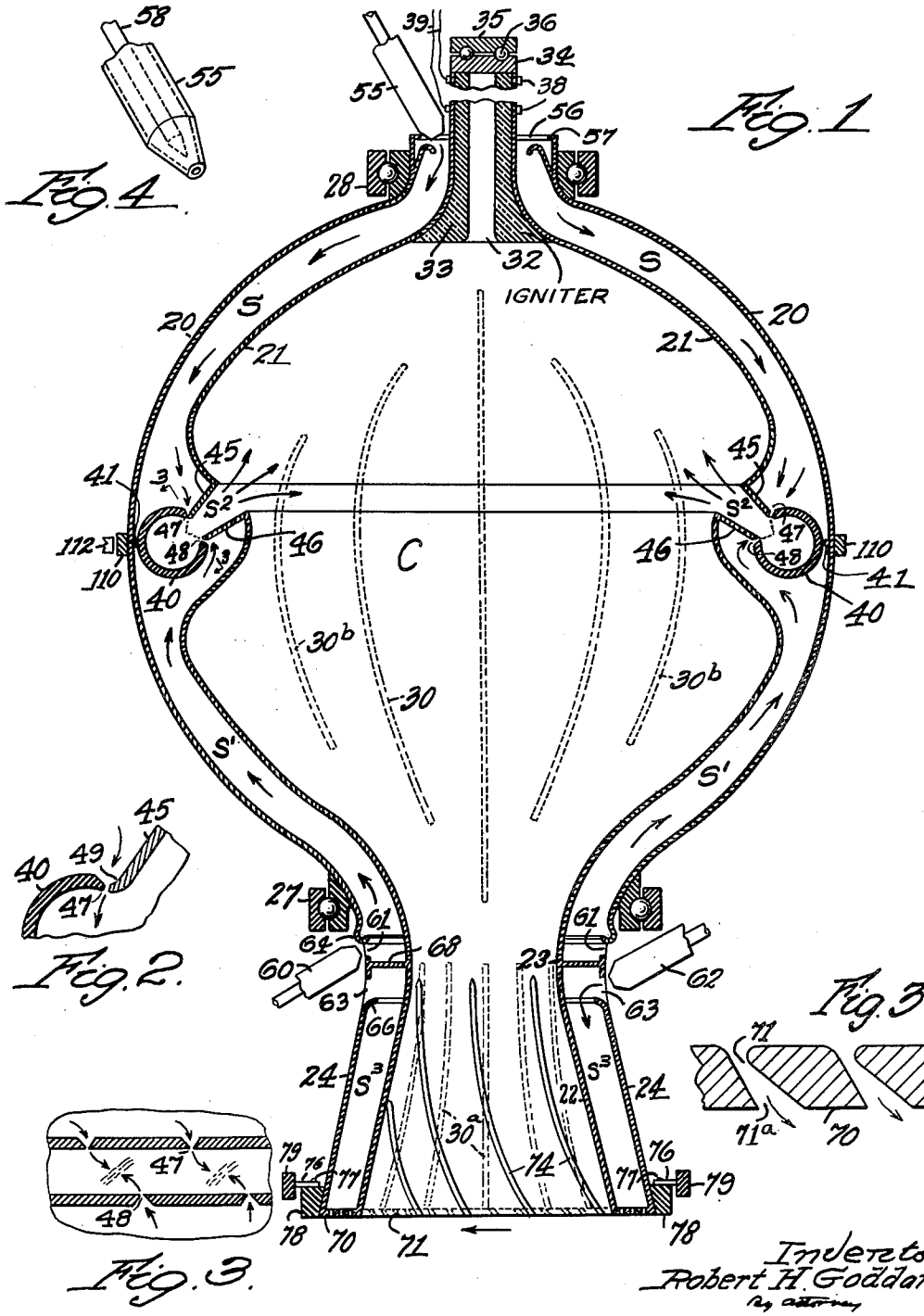

Inventor
Robert H. Goddard
By attorney
Chas. T. Hawley

Witness
C. F. Wiser

Feb. 19, 1946. R. H. GODDARD 2,395,114

ROTATING COMBUSTION CHAMBER FOR ROCKET APPARATUS

Filed Oct. 12, 1942 2 Sheets-Sheet 2

Fig. 5.

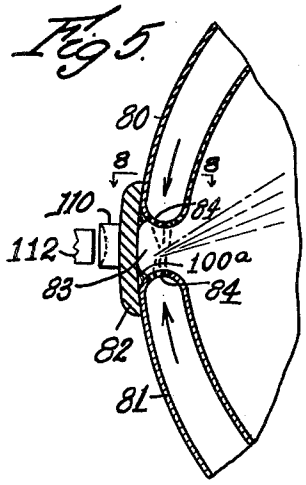

Fig. 6.

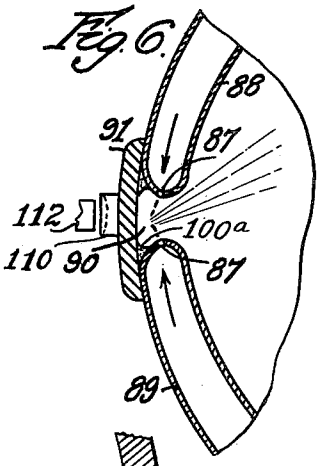

Fig. 7.

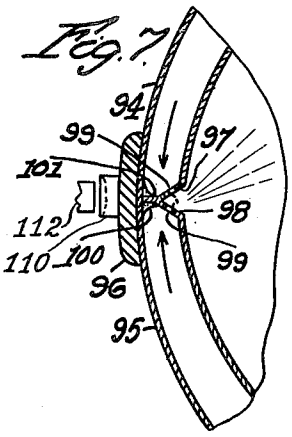

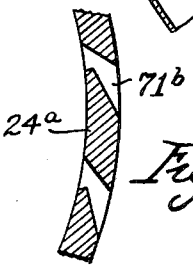

Fig. 15

Fig. 8.

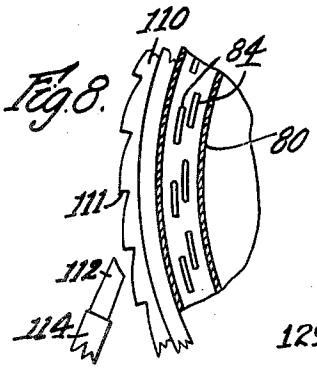

Fig. 11.

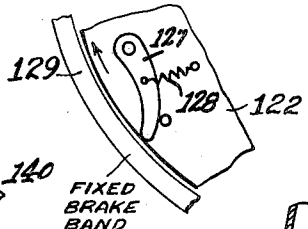

Fig. 9.

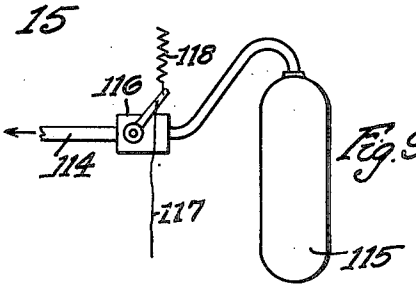

Fig. 13.

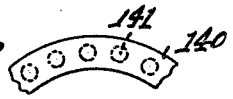

Fig. 10.

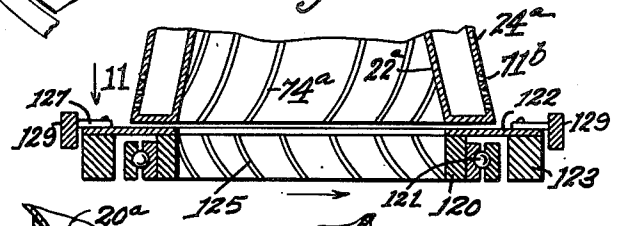

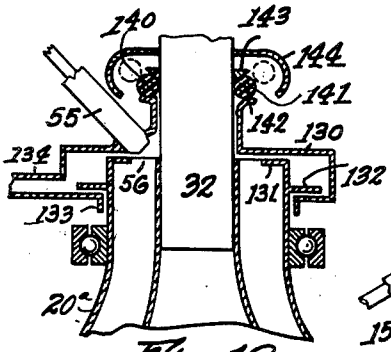

Fig. 12.

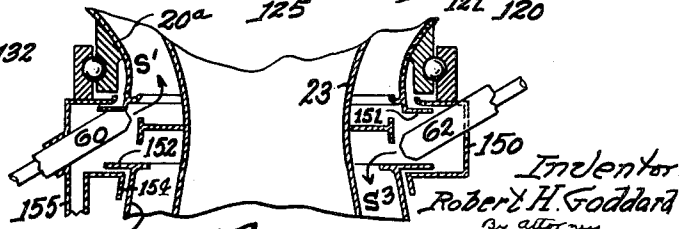

Fig. 14.

Inventor
Robert H. Goddard
By attorney
Alan T. Hawley

Witness
C. F. Dunn

Patented Feb. 19, 1946 2,395,114

UNITED STATES PATENT OFFICE

2,395,114

ROTATING COMBUSTION CHAMBER FOR ROCKET APPARATUS

Robert H. Goddard, Roswell, N. Mex., assignor of one-half to The Daniel and Florence Guggenheim Foundation, New York, N. Y., a corporation of New York

Application October 12, 1942, Serial No. 461,671

20 Claims. (Cl. 60—35.6)

This invention relates to rocket apparatus adapted for use in aircraft, and relates more particularly to rocket apparatus in which the combustion chamber is rotated during the combustion operation.

It is one important object of my invention to provide means for directly increasing the feed pressure of the coacting combustion liquids by the rotation of the combustion chamber itself and by a very simple and reliable construction thereof.

I also provide means for producing initial rotation of the combustion chamber; means for controlling the speed of rotation of the chamber; automatic means to counteract the gyroscopic effect of the rotating chamber; means to prevent the escape of combustion liquids from the apparatus; improved means for jacketing and cooling the walls of the combustion chamber and its associated discharge nozzle; and improved means for effecting high-speed injection of a combustion mixture into the body of the combustion chamber.

Another feature of the invention is the attainment of very thorough mixing and high-speed injection of the combustion liquids by preliminary combustion of a small or fractional amount of said liquids.

My invention further relates to arrangements and combinations of parts which will be hereinafter described and more particularly pointed out in the appended claims.

Preferred forms of the invention are shown in the drawings, in which

Fig. 1 is a sectional front elevation of my improved combustion chamber and associated parts;

Fig. 2 is an enlarged detail sectional view of a part shown in Fig. 1 and to be described;

Fig. 3 is an enlarged detail sectional view, taken along the line 3—3 in Fig. 1;

Fig. 3a is an enlarged detail sectional view of certain discharge openings, to be described;

Fig. 4 is a perspective view of a feeding device or nozzle to be described;

Figs. 5, 6 and 7 are partial sectional front elevations of certain modified chamber constructions;

Fig. 8 is a partial sectional plan view, taken along the line 8—8 in Fig. 5;

Fig. 9 is a front elevation of pressure-supplying apparatus to be used with the construction shown in Figs. 5 and 8;

Fig. 10 is a sectional front elevation of a modified construction for counteracting gyroscopic force;

Fig. 11 is an enlarged partial detail plan view, looking in the direction of the arrow 11 in Fig. 10;

Fig. 12 is a partial sectional front elevation of the upper portion of a combustion chamber provided with sealing devices;

Fig. 13 is a partial plan view of a sealing ring used therein and to be described;

Fig. 14 is a sectional front elevation of the lower portion of a combustion chamber, also provided with sealing devices; and

Fig. 15 is a detail sectional plan view of a portion of the nozzle outer casing shown in Fig. 10.

Referring to Figs. 1 to 4, my improved combustion chamber C comprises an outer casing 20, an upper inner casing member or chamber wall 21, and a lower inner casing member or chamber wall 22. I also provide a discharge nozzle 23 and an outer casing 24 for the nozzle 23. All of the parts thus far described are permanently secured together to form a single rotating unit which is preferably supported on radial anti-friction bearings 27 and 28 in which the unit is firmly supported but freely rotatable.

Ribs or partitions 30 are interposed between the outer casing 20 and the inner casing members 21 and 22, and these partitions serve to hold the parts in desired spaced relation and also to direct the combustion liquids toward the ignition area and to give said liquids a rapid rotary motion, thus generating a substantial centrifugal force therein. Similar partitions 30^a are used in the nozzle.

It will be noted that the inner casing members 21 and 22 gradually approach the outer casing 20 as the casing and casing members increase in diameter, thereby maintaining the spacing area between the inner members and the outer casing more nearly uniform.

Certain of the partition members in the chamber, as 30^b, are stopped-off at their ends, so that the partition members will not approach each other unduly and thus restrict the axial flow of the combustion liquids.

An ignition device 32 is mounted at the upper end of the combustion chamber and preferably rotates therewith. The device 32 is provided with a lining 33 of refractory material and at its upper end is provided with a bearing plate 34, coacting with a fixed plate 35 and with a series of balls 36 to form a thrust bearing to resist the upward force generated by the discharge of combustion gases from the nozzle 23.

The ignition device 32 is not shown in detail herein but may be of the general type shown in Fig. 1 of my prior Patent 2,090,039, issued August 17, 1937. Commutator rings 38 may be provided to conduct current from wires 39 to the spark-plug shown in my prior patent and forming an essential part of the igniter.

An annular mixing ring 40 is mounted on the combustion chamber C at its point of greatest diameter and may be secured to the outer casing 20 by a web or flange 41, which also separates the space S between the outer casing 20 and the upper casing member 21 from the space S' between the outer casing 20 and the lower casing member.

The lower end of the upper casing member 21 is inwardly curved or offset as shown in Fig. 1 and is connected to the annular mixing ring 40 by an end plate or partition 45. The upper end of the lower casing member 22 is similarly inwardly curved or offset and is connected to the annular mixing ring 40 by an end plate or partition 46.

Nozzle or port openings 47 and 48 are provided at the edges of the ring 40, and these openings are preferably formed as shown in Fig. 2 with an enlarged or countersunk outer portion 49, so that the effective length of each nozzle opening 47 or 48 is relatively short. The upper and lower openings 47 and 48 are preferably so disposed that jets of the combustion liquids enter at an intersecting angle, as shown in Fig. 1, with the resultant mixture thereafter directed radially outward into the annular mixing ring before being ejected inward to the combustion chamber C through the annular space S2 between the diverging flanges 45 and 46. It will be noted that these flanges are both inclined upwardly, so that the escaping combustible mixture is directed diagonally upward toward the ignition device 32. The greater mass and momentum of the oxygen assists in directing the fuel mixture upwardly. The gases thus remain longer in the combustion chamber C, insuring good combustion. The ring 40 has a relatively thick wall and coacts with the annular space S2 as follows: The liquids entering through the nozzle openings 47 and 48 impinge on each other, scatter, and then strike the inside surface of the ring 40. There is some preliminary combustion in the space enclosed by the ring 40, and this preliminary combustion generates enough pressure to force the partially burned mixture rapidly through the inwardly expanding space S2, so that it enters the body of the chamber C at high speed. This produces very thorough mixing of the combustion liquids and overcomes the outward centrifugal force. This space S2 is of increasing cross section in the direction of flow, and thus acts somewhat like an expansion nozzle in increasing the velocity.

The wall of the ring 40 is made thick enough so that the inner surface can be comparatively warm and hence produce some vaporizing of the mixed liquids, while the outer surface remains cool and does not produce boiling in the spaces S and S1.

This use of a fraction of the total combustion liquids for preliminary combustion to produce thorough mixing of the liquids and rapid injection thereof is very important.

The upper and lower port openings 47 and 48 are preferably staggered as shown in Fig. 3 for more effective intermingling of the combustion liquids and more complete coverage of the inner surface of the ring 40 by the spray resulting from the impinging streams.

One of the combustion liquids, as gasoline, is preferably admitted tangentially to the upper jacket space S from a nozzle 55 through an annular opening 56 in the upper end flange 57 of the outer casing 20. The flow through the nozzle 55 may be controlled by axial adjustment of a plunger 58 (Fig. 4).

The other combustion liquid, as liquid oxygen, may be supplied tangentially to the lower space S' by a similar nozzle 60 directed through an annular inlet slot or opening 61 at the lower end of the outer casing 20.

A third nozzle 62 injects a cooling liquid tangentially through an annular inlet opening 63 to the jacket space S3 between the discharge nozzle 23 and its outer casing 24.

The lower end of the outer casing 20 is preferably provided with a re-curved portion or inner flange 64 at its lower end to prevent down-flow and escape of the injected liquid. The upper end of the outer nozzle casing 24 is bent inward to provide a flange 66 to prevent escape of the cooling liquid which may be liquid oxygen or water or any other non-combustible liquid. This liquid is supplied for cooling purposes only and does not enter the combustion chamber. An annular partition 68 separates the inlet openings 61 and 63.

The end wall 70 below the space S3 is perforated as indicated at 71 to permit escape of the cooling liquid injected through the opening 63 or vapor or steam formed therefrom. The liquids delivered through the nozzles 55, 60 and 62 may come from any suitable storage supply under pressure. The holes 71 are preferably helically disposed in order to assist in producing rotation of the chamber. These holes also preferably increase in cross section in the direction of outflow, as shown at 71^a (Fig. 3a), and produce a nozzle reaction.

To produce automatic rotation of the combustion chamber C, the inner wall of the nozzle 23 is provided with spirally disposed ribs 74 which coact with the discharge gases to exert a strong rotative force on the chamber. In order to prevent excessive speed of rotation of the chamber, I provide brake devices 76, pivoted at 77 on a ring 78 secured to the outside of the nozzle casing 24. These brake devices 76 are moved outward by centrifugal force and drag against a fixed brake band 79.

The detailed construction of these brake devices may be the same as is shown in Figs. 10 and 11, in connection with which figures a more detailed description will be given.

A combustion chamber constructed as above described possesses many and important advantages. The combustion liquids enter at points of restricted diameter of the chamber and are both caused to flow outward and toward the annular mixing ring 40 by centrifugal force. This force also supplies pressure for ejecting the liquids through the port openings 47 and 48. The spaces S and S' constitute fluid-filled cooling jacket spaces about the combustion chamber and the space S3 serves the same purpose for the discharge nozzle.

This makes it possible to construct the combustion chamber and nozzle of relatively thin sheet metal which, when thus jacketed, will withstand the intense heat developed in the combustion chamber. The rotation of the chamber, being caused by the reaction of the discharge gases on

the ribs 74, is entirely automatic and the speed of rotation is automatically controlled by the brake devices 76.

With this very simple construction, I am thus able to attain very efficient mixing of the combustion liquids and equally efficient cooling of the metal surfaces exposed to the combustion gases. The rapid rotation of the port openings or slots causes similar rapid rotation of the fuel mixture and combustion gases in the chamber. The cooler and heavier gases will remain near the chamber walls, while the hotter and more completely consumed gases will move away from the walls.

In Figs. 5, 6 and 7 I have shown modified constructions of the combustion chamber walls at their points of greatest diameter. In Fig. 5, the upper part 80 and the lower part 81 of the rotating combustion chamber are formed as separate hemispherical units having their adjacent end portions secured together by a strong and relatively heavy encircling band 82. The adjacent ends of the parts 80 and 81 are spaced apart to provide a mixing recess 83, and preferably staggered slots or openings 84 (Fig. 8) are formed in the adjacent ends, through which slots the combustion liquids are delivered.

The construction shown in Fig. 6 is similar to that shown in Fig. 5, except that the openings 87 in the adjacent ends of the chamber portions 88 and 89 are directed outward into an annular recess 90, so that more active agitation before ignition may take place. The parts 88 and 89 are joined by an annular band 91, as in the previous construction.

In Fig. 7, the upper chamber portion 94 and the lower portion 95 are joined by a band 96 as previously described. The adjacent ends of the chamber portions 94 and 95 are abutted, however, and have inwardly beveled end surfaces 97 and 98 provided with nozzle or port openings 99. In this construction, the jets of liquid are discharged along intersecting paths directly into the combustion chamber. Fillets 100 may be provided at each side of the separating partition 101 and also as shown at 100a in Figs. 5 and 6. Either staggered slots or circular port openings may be used in any of the chamber constructions.

With all forms of my invention, it is desirable to provide means for effecting initial rotation and for this purpose I provide an annular ring 110 having a plurality of bucket recesses 111 (Fig. 8) coacting with a nozzle 112. The nozzle 112 may be supplied with compressed air or other compressed gas through a pipe 114 (Fig. 9) from a tank 115. The delivery of compressed air may be controlled by a valve 116, conveniently operated by a cord 117, and normally closed by a spring 118. By pulling the cord 117 and holding the valve open for a short period, the combustion chamber may be given its necessary initial rotation.

The rotation of the combustion chamber C produces a considerable gyroscopic effect and a certain amount of angular momentum which may in some cases interfere with steering a rocket craft. This gyroscopic effect may be more or less counteracted by the auxiliary construction shown in Fig. 10, in which a ring 120 is mounted at the discharge end of the nozzle 22a, which nozzle is constructed as previously described, except that the discharge openings 71b (Fig. 15) are in the outer casing 24a rather than in the end wall of the nozzle. The openings 71b are to some extent tangential to assist in producing rotation, and are preferably also in the form of expanding nozzles, such as are also shown in Fig. 3a. The ring 120 is freely rotatable in ball bearings 121 and supports an annular disc 122, which in turn supports a relatively heavy annular band 123.

The inner surface of the ring 120 is provided with spiral ribs 125 which are, however, reversely disposed with respect to the ribs 74a in the associated nozzle. Consequently, as the combustion gases leave the discharge nozzle after effecting rotation of the combustion chamber and nozzle in one direction, these gases encounter the ribs 125 in the band 120 and cause rapid rotation of the ring 120, associated disc 122 and band 123 in the reverse direction. Consequently a second gyroscopic force is developed which more or less neutralizes the gyroscopic effect of the rotating combustion chamber.

The speed of rotation of the ring 120, flange 122 and associated parts may be controlled by brake devices 127 (Fig. 11), normally drawn inward by springs 128 but moved outward by centrifugal force to engage a fixed brake band 129 and thus prevent an excessive speed of rotation of the auxiliary parts.

It is desirable to prevent escape of any of the liquids supplied through the nozzles 55, 60 and 62, as mixtures of vapors of these liquids collecting in any enclosed space outside of the combustion chamber might be explosive and very dangerous. I accordingly find it desirable to provide the sealing devices shown in Figs. 12 to 14 and which I will now describe.

The devices shown in Figs. 12 and 13 are provided at the top of the combustion chamber C to prevent the escape of liquid oxygen injected from the nozzle 55 and designed to enter the combustion chamber through the annular opening 56. These devices comprises a stationary flat annular casing or jacket 130 enclosing the upper end of the combustion chamber. I extend the outer casing 20a of the combustion chamber into the jacket 130 and provide an inwardly directed vane or slinger 131 and an outwardly directed vane or slinger 132 adjacent the upper and lower inner flat surfaces of the jacket 130. These vanes have only slight clearance relative to the jacket surfaces.

I also provide the jacket 130 with a depending flange 133 running closely adjacent the upper end of the combustion chamber casing 20a, and I provide the jacket with a suitable drain pipe 134.

With this construction, any liquid oxygen which does not pass through the annular opening 56 will be thrown outward by the slinger 131 into the fixed jacket 130, from which it will be thrown or otherwise removed through the drain pipe 134. The slinger 132 very effectually opposes passage of liquid through the narrow space between the casing 20a and the lower surface of the jacket, and the flange 133 additionally prevents escape of liquid or any vapor thereof from the jacket.

It is also desirable to seal the space between the rotating ignition device 32 and the upper end of the jacket 130 when the apparatus is at rest, and for this purpose I provide a natural or synthetic rubber band 140 of circular cross section and having a considerable number of lead balls 141 embedded therein. When the apparatus is at rest, the band 140 is seated between

a flange 142 on an upward extension of the jacket 130 and a flange 143 on the rotating igniter 32.

When the combustion chamber and igniter are rotated, even at low speed, centrifugal force acting on the lead balls 141 expands the band 140 as shown in dotted lines in Fig. 12, so that it does not engage the stationary flange 142. This relieves the starting motor. A cover 144 mounted on the igniter 32 limits outward displacement of the band 140 and also protects the associated parts from dirt or injury.

A somewhat similar sealing construction for the nozzles 60 and 62 is shown in Fig. 14, in which a fixed annular jacket 150 surrounds the restricted connection between the lower end of the combustion chamber C and the upper end of the discharge nozzle 23.

The lower end of the outer casing 20^a of the combustion chamber is provided with an outwardly projecting annular vane or slinger 151, and the upper end of the outer casing 24^b of the nozzle is provided with an outwardly projecting vane or slinger 152. The jacket 150 is provided with a depending flange 154 embracing the upper end of the outer casing 24^b of the nozzle. A drain pipe 155 is provided for the jacket 150. The vanes 151 and 152 and the flange 154 all run with slight clearance.

With this construction, liquid from the nozzle 60 which does not enter the space S' will be thrown outward by the slinger 151 into the jacket 150 and will be drained off through the pipe 155. In a similar manner, liquid from the nozzle 62 which does not enter the space S3 will be thrown outward by the slinger 152 into the jacket 150. Escape of these liquids between the vane or slinger 152 and the bottom surface of the jacket 150 is effectually prevented by the centrifugal action of the slinger and also by the relatively slight clearance.

With these improved sealing constructions, the combustion chamber C and nozzle 23 are free to rotate at high speed and without frictional engagement by stationary parts, but at the same time escape of the liquids supplied through the nozzles 55, 60 and 62 is effectually prevented.

Having thus described my invention and the advantages thereof, I do not wish to be limited to the details herein disclosed, otherwise than as set forth in the claims, but what I claim is:

1. A combustion chamber for rocket apparatus using a liquid fuel and a liquid oxidizing agent, which chamber comprises an enclosing unitary structure having spaced inner and outer walls and providing separated upper and lower and substantially curved recessed chamber wall portions, an axially aligned discharge nozzle for said chamber, means to rotate said chamber and nozzle together about the common longitudinal axis thereof, means to supply one combustion liquid to the upper recessed chamber wall portion at its upper and smaller end and adjacent said axis, and means to supply a second and coacting combustion liquid to the lower recessed chamber wall portion near the restricted connection between the combustion chamber and the nozzle and adjacent said axis, said recessed chamber wall portions having port openings in their larger and adjacent ends and at the zone of greatest rotative diameter of said chamber, and said liquids being advanced to said port openings by centrifugal force.

2. The combination in a combustion chamber as set forth in claim 1, in which meridian partitions are provided in said recessed chamber wall portions to hold said inner and outer walls in spaced relation and said partitions being effective to impart rotation to the combustion liquids fed thereto.

3. The combination in a combustion chamber as set forth in claim 1, in which the upper and lower port openings are circumferentially staggered to more effectively intermingle said liquids.

4. The combination in a combustion chamber as set forth in claim 1, in which an annular mixing recess is provided between the adjacent ends of said recessed chamber wall portions, and in which an annular slot provides communication between said mixing recess and said combustion chamber.

5. The combination in a combustion chamber as set forth in claim 1, in which an annular mixing recess is provided between the adjacent ends of said recessed chamber wall portions, and in which means is provided to direct the combustion mixture from said recess and into said combustion chamber but away from the discharge end of said chamber.

6. The combination in a combustion chamber as set forth in claim 1, in which a gyroscopic counterbalancing member for said chamber is mounted adjacent the discharge end of said nozzle and is rotated by the gases discharged from said nozzle but with the direction of rotation in reverse with respect to that of said chamber and nozzle.

7. The combination in a combustion chamber as set forth in claim 1, in which a gyroscopic counterbalancing member for said chamber is mounted adjacent the discharge end of said nozzle and is rotated by the gases discharged from said nozzle but with the direction of rotation in reverse with respect to that of said chamber and nozzle, and in which means is provided to control the speed of rotation of said counterbalancing member.

8. The combination in a combustion chamber as set forth in claim 1, in which the spacing between the inner and outer walls of said recessed wall portions is gradually decreased as the outer diameter of said wall portions is increased, thereby providing more uniform total diametral cross sectional area in said recessed wall portions.

9. The combination in a combustion chamber as set forth in claim 1, in which a fixed jacket casing surrounds the rotated upper end of said combustion chamber, and in which an extensible weighted ring seals the space between said rotated upper end and the adjacent edge of said fixed jacket casing when the combustion chamber is at rest, but is removed from contact therewith by centrifugal force when said chamber is rotated.

10. The combination in combustion chamber as set forth in claim 1, in which said second liquid is supplied through a fixed supply nozzle coacting with an annular opening in the outer wall of said lower recessed chamber wall portion at said restricted connection.

11. The combination in a combustion chamber as set forth in claim 1, in which the discharge nozzle has inner and outer walls providing a frustro-conical recessed nozzle wall portion, and in which means is provided to supply a cooling liquid to said recessed wall portion adjacent its point of smallest diameter.

12. The combination in a combustion chamber as set forth in claim 1, in which the discharge nozzle has inner and outer walls providing a

frustro-conical recessed nozzle wall portion, and in which means is provided to supply a cooling liquid to said recessed wall portion adjacent its point of smallest diameter, and in which said latter means comprises a fixed supply nozzle coacting with an annular recess in the outer wall of said discharge nozzle.

13. The combination in a combustion chamber as set forth in claim 1, in which the discharge nozzle has inner and outer walls providing a frustro-conical recessed nozzle wall portion, and in which means is provided to supply a cooling liquid to said recessed nozzle wall portion adjacent its point of smallest diameter, and in which an annular partition separates the lower recessed wall portion of said combustion chamber from the recessed wall portion of said nozzle.

14. The combination in a combustion chamber as set forth in claim 1, in which the discharge nozzle has inner and outer walls providing a frustro-conical recessed nozzle wall portion, and in which means is provided to supply a cooling liquid to said recessed wall portion adjacent its point of smallest diameter, and in which the lower end of said recessed wall portion is provided with port openings helically disposed with respect to the nozzle axis and through which the cooling medium is discharged, thereby facilitating rotation of said combustion chamber and nozzle.

15. The combination in a combustion chamber as set forth in claim 1, in which the discharge nozzle has inner and outer walls providing a frustro-conical recessed nozzle wall portion, and in which a cooling liquid is supplied to said recessed wall portion adjacent its point of smallest diameter, and in which fixed supply nozzles are provided for said three liquids coacting with annular openings in said outer walls, and in which centrifugal sealing means is provided to prevent leakage about said nozzles and annular openings.

16. The combination in a combustion chamber as set forth in claim 1, in which the adjacent ends of said recessed wall portions are spaced apart to provide an annular mixing recess, and in which the outer wall of said recess comprises a relatively heavy reenforcing band joining the adjacent edges of the outer walls of said recessed wall portions.

17. The combination in a combustion chamber as set forth in claim 1, in which the adjacent ends of said recessed wall portions are spaced apart to provide an annular mixing recess, and in which the outer wall of said recess comprises a relatively heavy reenforcing band joining the adjacent edges of the outer walls of said recessed wall portions, and in which power means is provided which coacts with devices on said reenforcing band to provide initial rotation for said combustion chamber.

18. The combination in a combustion chamber as set forth in claim 1, in which an annular mixing recess is provided between the adjacent ends of said recessed chamber wall portions, and in which an annular slot provides communication between said mixing recess and said combustion chamber, the wall of said mixing recess being relatively thick, so that its inner surface may be maintained at a temperature sufficient to produce partial vaporization of the mixed liquids, while its surface is substantially at the temperatures of the liquids in said recessed chamber wall portions.

19. The combination in a combustion chamber as set forth in claim 1, in which an annular mixing recess is provided between the adjacent ends of said recessed chamber wall portions, and in which an annular slot provides communication between said mixing recess and said combustion chamber, said annular slot increasing in cross section in the direction of flow and being effective as an injection nozzle for the intermingled combustion liquids.

20. The combination in a combustion chamber as set forth in claim 1, in which the discharge nozzle has inner and outer walls providing a frustro-conical recessed nozzle wall portion, and in which means is provided to supply a cooling liquid to said recessed wall portion adjacent its point of smallest diameter, and in which the lower end of said recessed wall portion is provided with port openings helically disposed with respect to the nozzle axis and through which the cooling medium is discharged, and said port openings being enlarged outwardly and thereby facilitating rotation of said combustion chamber and nozzle.

ROBERT H. GODDARD.