Dec. 6, 1955 D. RAGLAND ET AL 2,726,063

METHOD OF DRILLING WELLS

Filed May 10, 1952

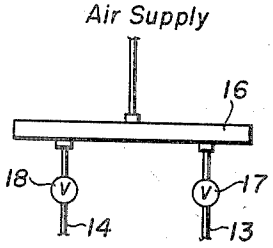

FIG. 3.

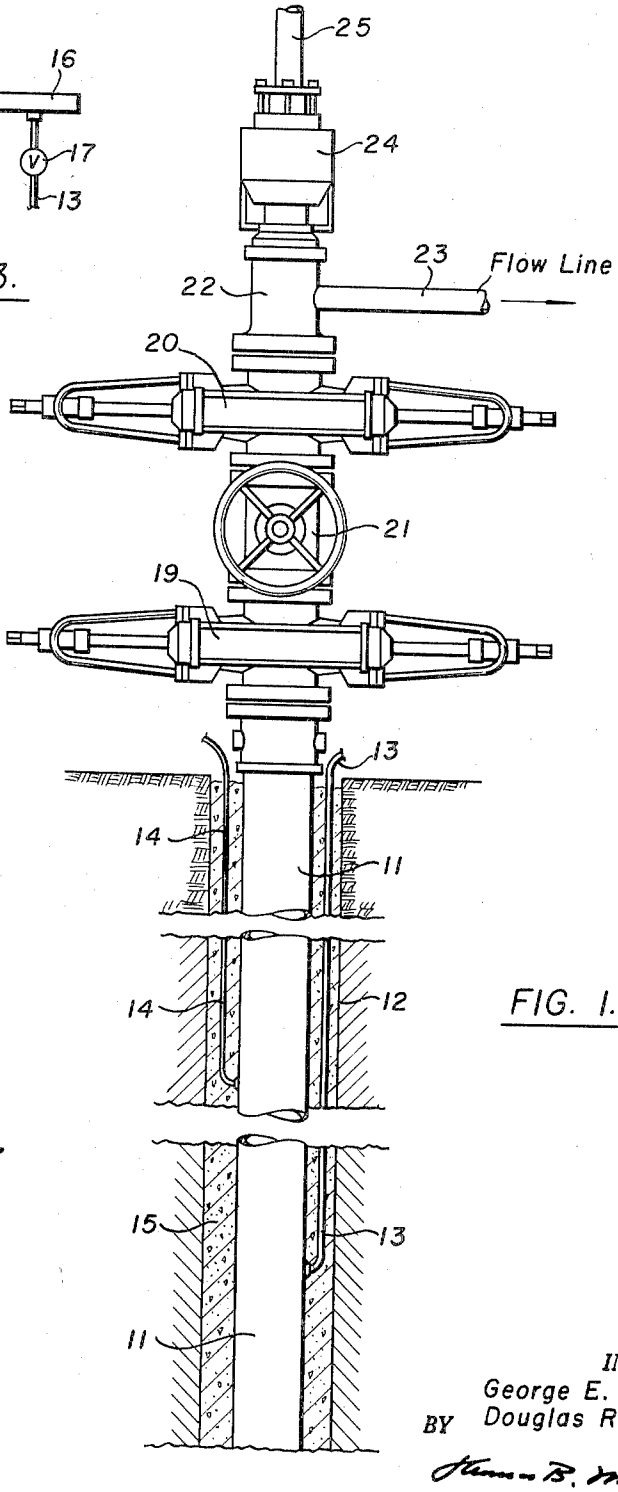

FIG. 1.

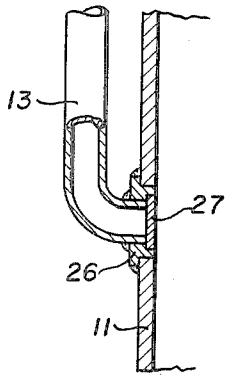

FIG. 2.

INVENTOR.
George E. Cannon,
Douglas Ragland,
BY

AGENT

United States Patent Office 2,726,063 Patented Dec. 6, 1955

2,726,063

METHOD OF DRILLING WELLS

Douglas Ragland and George Edward Cannon, Houston, Tex., assignors, by mesne assignments, to Esso Research and Engineering Company, Elizabeth, N. J., a corporation of Delaware

Application May 10, 1952, Serial No. 287,168

4 Claims. (Cl. 255—1.8)

The present invention is directed to a method of drilling a well in which a hollow drill stem having a drill bit attached to it is rotated. More particularly, the invention is concerned with a method for drilling a well in which the weight of the drilling mud is decreased to avoid loss of mud in highly permeable formations. In its more specific aspects the invention is directed to a drilling operation in which mud is circulated which involves the reduction of the weight of the mud during the circulation.

The present invention may be briefly described as a method of drilling a well, particularly an oil well, in which a hollow drill stem having a drill bit attached to a lower end thereof and in which a drilling fluid is circulated down the drill stem and through a passageway in the drill bit and then up an annulus between the drill stem and a wall of the well bore. The particular feature of the present invention is incorporating in the drilling fluid as it circulates in a well a weight reducing amount of a gasiform fluid to prevent the loss of drilling fluid below a preselected value to highly permeable formations penetrated by said drill bit. While the drilling operation is conducted in such highly permeable formations, the drilling fluid is continuously circulated and there is continuously incorporated therein the gasiform fluid. Thereafter when the highly permeable formation has been passed and when the loss of drilling fluid to formations penetrated by said bit is below the preselected value, the incorporation of gasiform fluid into the drilling fluid is discontinued to increase the weight of the drilling fluid to a mud or drilling fluid having a normal weight for the particular depth and conditions employed.

The gasiform fluid employed in the practice of our invention may be air or natural gas or any other suitable gasiform fluid. It may be desirable in some instances to use inert gases, such as nitrogen, methane, ethane, propane, and the like, or mixtures thereof.

The gasiform fluid may be introduced into the circulating mud at the surface of the well and particularly into the stand pipe by a suitable connection thereto following which the aerated or gasified mud is then pumped down the hollow drill stem through the eyes of the bit and then up the annulus. The gasiform fluid preferably may be introduced into the annulus at a predetermined depth below the surface of the well. This may suitably be done by having at least a small conduit or conduits tap the casing at a pre-selected depth and air or gas injected into the annulus as the mud stream or the stream of drilling fluid proceeds up the annulus.

The present invention will be further illustrated by reference to the drawing in which

Fig. 1 illustrates apparatus for carrying out a preferred mode of the invention;

Fig. 2 illustrates a detail of the attachment to the well casing; and,

Fig. 3 shows the arrangement for introducing gasiform fluid to the conduits of Figs. 1 and 2.

Referring now to the drawing, numeral **11** designates a well casing which is cemented in a well bore **12** to which

is attached at predetermined levels small conduits **13** and **14** which are led to the earth's surface through the cement **15** sheathing the casing **11** and connected to a manifold **16** which, in turn, is connected to a compressor, not shown. It is desirable that conduit **13** be larger than conduit **14** to compensate for pressure drop through the conduits and yet effectuate the beneficial aspects of the invention. Conduits **13** and **14** are provided, respectively, with valves **17** and **18** for control of flow of the gasiform fluid to the interior of casing **11**. The casing **11** is provided with blow-out preventers **19** and **20** and a master valve **21** as is conventional practice. Attached to the well head assembly **22** is a flow line **23** for discharge of drilling fluid from the annulus. The well head assembly **22** is provided with a pressure drilling head **24** such as the Guiberson type El as illustrated in the Composite Catalogue of Oil Field and Pipeline Equipment, volume 1, page 2057, 1951 edition. Arranged in the well head and extending down the casing **11** is a hollow drill stem **25** down which the drilling mud is circulated. The drill stem **25** has a drill bit, not shown, attached to the lower end thereof.

Referring now to Fig. 2 which is an enlarged view of the connections of the conduits **13** and **14** to the casing **11** the conduit **13** or **14**, as the case may be, is tapped into the casing **11** and may be welded thereto by suitable welds or other connections **26**. The discharge end of the conduits **13** and **14** may suitably be provided with a suitable frangible disc, such as rupture disc **27**, to prevent plugging of the conduits **13** and **14** during the cementing operation.

In the practice of our invention, it will be desirable to connect the conduits **13** and **14** to the casing **11** prior to the time when the casing is run into the hole and then allow it to be cemented therein during the cementing operation. It may be desirable when practicing the present invention employing this mode where the gasiform medium is introduced into the annulus to have the top 300 to 500 feet of the hole drilled to a diameter approximately 4 inches greater than current practice in order to maintain the proper clearance in the hole. In practicing the invention, drilling fluid, such as a suspension of clay or other finely divided materials and water, is circulated down the drill stem **25** and through the eyes of a bit, not shown, and up the annulus between the drill stem **25** and the interior of casing **11**, the mud flowing outwardly to the mud pit through flow line **23**. When it is indicated that mud returns are being lost above about 10%, the practice of our invention allows the weight of the drilling fluid to be reduced to prevent loss of returns. By starting up the compressor, not shown, which is attached to conduit **16**, it is possible to introduce air or gasiform fluid through either or both of conduits **13** or **14** by suitable manipulation of valves **17** and **18**. In this example of our invention the conduit **14** may be attached to the casing **11** at approximately 210 feet below the flow line **23** while the conduit **13** may be attached to the casing **11** at approximately 312 feet. In this operation the effective mud weight may be reduced at a depth of 5600 feet from 9.2 to 8.9 pounds per gallon while circulating mud at a rate of about 500 gallons per minute. Air may be supplied to the casing **11** at about 315 cubic feet per minute at a working pressure of about 100 pounds per square inch gauge on the compressor. At the beginning of the operations of reducing the mud weight air may be first injected through conduit **14** by opening valve **18**, and thus rupturing disc **27**, until an equilibrium point is reached. At this time the hydrostatic head at the lower point in the casing where the conduit **13** connects to the casing **11** would be reduced slightly less than 100 pounds and air would then be injected in the casing **11** through conduit **13** by opening valve **17** and closing valve **18**, disc **27** in con-

duit **13** being ruptured. Since the weight of the column of drilling fluid in the annulus has been reduced by incorporating air into the mud therein through conduit **14**, it is then possible to inject air at a lower point in the casing **11** by conduit **13**. Thus the air pressure available from the compressor, not shown, has only to overcome the hydrostatic head of the column of drilling fluid in the annulus whose weight has been reduced. A plurality of conduits vertically spaced on the casing **11** may suitably be used to accomplish the beneficial results of our invention. Injection of air would be continued into the casing **11** as long as drilling operations were conducted in the highly permeable formation where mud heretofore was lost to a great extent. After the highly permeable formation has been passed or traversed by the drill bit, the weight of the mud may then be increased by closing off valve **16**. In making a connection to the drill stem the air may be shut off and drilling operations resumed after the connection is made.

It is intended that our invention is not to be limited to the preferred mode. As mentioned before, air may be injected into the stand pipe and the mud, containing injected air, forced down through the drill stem and up the annulus, pressure being released when the mud is flowed into the mud ditch and mud pits.

It is also possible to practice our invention by suitably emulsifying the mud with a gasiform fluid, such as air, by providing a suitable mixing device, such as a jet or an impeller-type mud mixer to whip the mud up into a creamy mass containing air or other gasiform fluid. However, it is preferred to introduce the air or gasiform fluid into the annulus at a pre-determined point below the earth's surface as has been described with respect to the drawing.

The nature and objects of the present invention having been completely described and illustrated, what we wish to claim as new and useful and to secure by Letters Patent is:

1. A method of drilling a well under pressure by rotating a hollow drill stem having a drill bit attached to a lower end thereof which comprises the steps of pumping a drilling mud containing a suspension of finely divided fluids and having a normal weight for the particular depth of the well down the drill stem and through a passageway in the drill bit and up the annulus between the drill stem and a casing lining the wall of the well, injecting into the pumped drilling mud in said annulus at predetermined depths below the earth's surface at a plurality of vertically spaced apart points a weight reducing amount of a gasiform fluid to prevent the loss of drilling mud above a preselected value about 10% by volume of the mud circulating in the well to formations penetrated by said drill bit, continuously pumping drilling mud and injecting gasiform fluid into the pumped drilling mud in said annulus, and then discontinuing said injection of gasiform fluid into said pumped drilling mud to increase its weight when the loss of drilling mud to formations penetrated by said bit is below said preselected value.

2. A method in accordance with claim 1 in which the gasiform fluid is air.

3. A method in accordance with claim 1 in which the gasiform fluid is natural gas.

4. A method in accordance with claim 1 in which the vertically spaced apart points are approximately 210 and approximately 312 feet below the earth's surface.

References Cited in the file of this patent

UNITED STATES PATENTS

1,324,304	Carmichael	Dec. 9, 1919
2,082,329	Foran et al.	June 1, 1937
2,537,605	Sewell	Jan. 9, 1951

FOREIGN PATENTS

578,788	Germany	June 20, 1933