Dec. 29, 1964 J. WERNER 3,163,054

DRIVING DEVICE FOR SLIDING WINDOWS

Filed Dec. 5, 1961 2 Sheets-Sheet 1

FIG.1

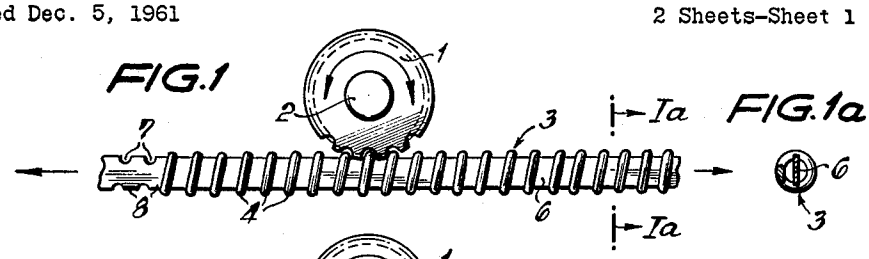

FIG.1a

FIG.2

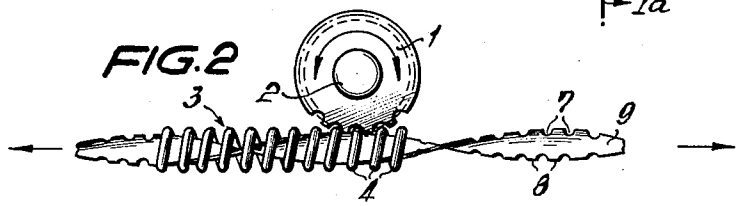

FIG.4

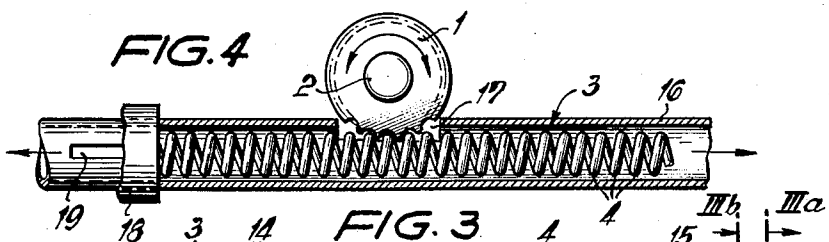

FIG. 3

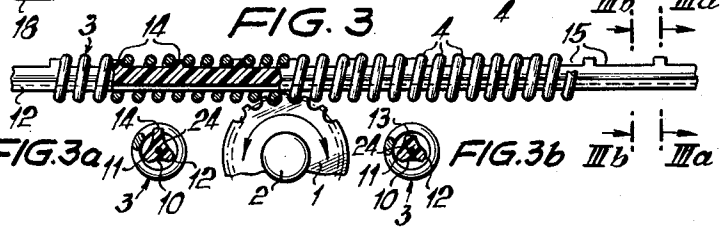

FIG.3a

FIG.3b

FIG.5
(PRIOR ART)

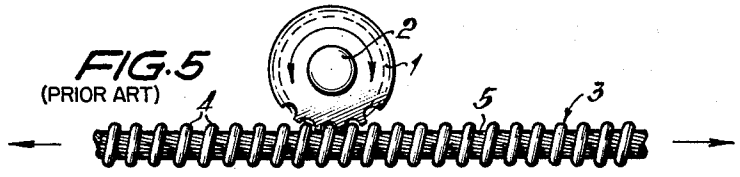

FIG.6

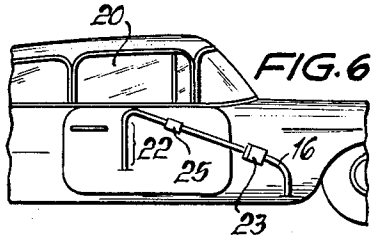

FIG.7

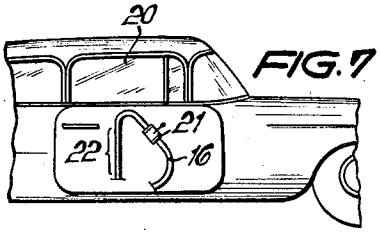

INVENTOR
JOHANNES WERNER

by Nolte and Nolte

Dec. 29, 1964 J. WERNER 3,163,054

DRIVING DEVICE FOR SLIDING WINDOWS

Filed Dec. 5, 1961 2 Sheets-Sheet 2

FIG. 8

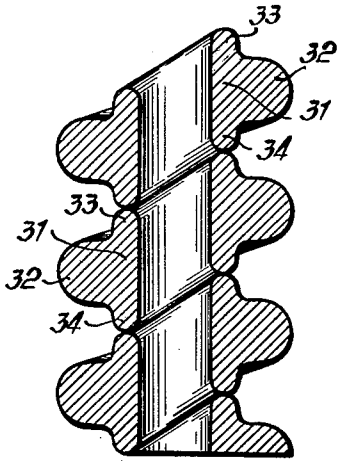

FIG. 9

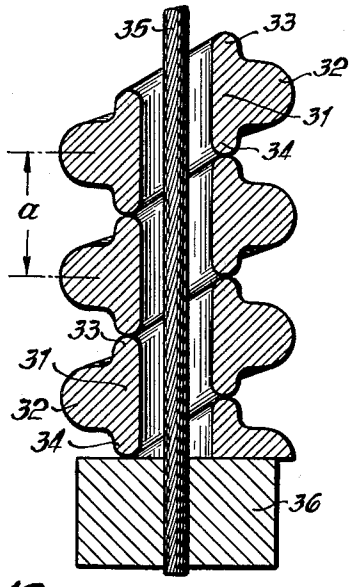

FIG. 10

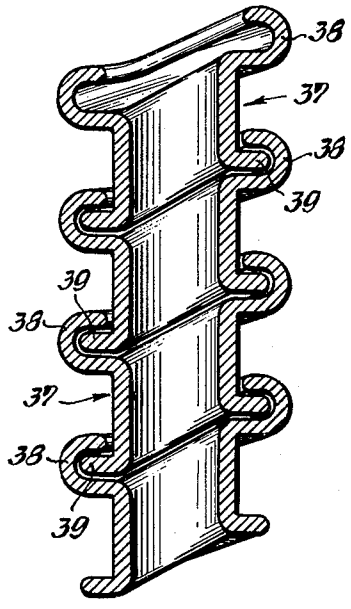

INVENTOR

JOHANNES WERNER

by Nolte and Nolte

United States Patent Office

3,163,054

Patented Dec. 29, 1964

3,163,054

DRIVING DEVICE FOR SLIDING WINDOWS

Johannes Werner, Offenbach (Main), Germany, assignor to H. T. Golde G.m.b.H. & Co. K.G., Frankfurt am Main, Germany

Filed Dec. 5, 1961, Ser. No. 157,095
Claims priority, application Germany, Dec. 9, 1960, G 31,122; Oct. 14, 1961, G 33,350
13 Claims. (Cl. 74—422)

This invention relates to a flexible drive-transmission device.

Known flexible drive-transmission cables having ribbing coiled about a cylindrical core have often been found to be successful in the transmission of driving force, but are relatively expensive to manufacture and, particularly if it is necessary to transmit the driving force over fairly long distances, have a considerable dead weight. The cables are relatively stiff and are rather inefficient when laid in curved guide tubes. Moreover, they have a strength which is not required in many fields of application.

According to the present invention, there is provided a drive-transmission device, comprising a toothed wheel, a hollow rack engaging with said toothed wheel and constituted by a flexible, substantially helical, coil, and guide means extending away from the neighbourhood of said toothed wheel in an axial direction of said coil and having said coil extending therein for guiding said coil.

In order that the invention may be clearly understood and readily carried into effect, reference will now be made, by way of example, to the accompanying drawings, in which:

FIGURE 1 shows a partial, diagrammatic side elevation of one embodiment of the drive-transmission device according to the present invention,

FIGURE 1*a* shows a section taken on the line I*a*—I*a* of FIGURE 1,

FIGURE 2 shows a partial, diagrammatic side elevation of another embodiment of the device according to the present invention,

FIGURE 3 shows a partly-sectional, diagrammatic side elevation of yet another embodiment of the device according to the present invention,

FIGURES 3*a* and 3*b* show sections taken on the respective lines III*a*—III*a* and III*b*—III*b* of FIGURE 3,

FIGURE 4 shows a partly-sectional, diagrammatic side elevation of a further embodiment of the device according to the present invention,

FIGURE 5 shows a diagrammatic side elevation of a known drive-transmission device,

FIGURE 6 shows a diagrammatic side elevation of a yet further embodiment of the device according to the present invention and installed in a motor vehicle,

FIGURE 7 shows a diagrammatic side elevation of a still further embodiment of the device according to the present invention and installed in a motor vehicle, and

FIGURES 8 to 10 show respective partial axial sections through yet still further embodiments of the device according to the present invention.

In the known device shown in FIGURE 5, a helical coil 3 is tightly wound about a flexible steel core 5 of circular cross-section, turns 4 of the coil 3 meshing with teeth of a toothed driving wheel 1 which is fixed to a shaft 2 and which is rotatable in both directions. Such a cable is so guided as to be rigid to axial force in guides, such as tubes, which extend from the driving wheel to the point to which the cable transmits drive, the guides preventing the cable from escaping laterally under axial force. However, in many cases the weight, the efficiency, and the manufacturing costs of such cables are disadvantageous.

Referring to FIGURE 1, a toothed driving wheel 1 is fixed to a shaft 2 and has teeth meshing with turns 4 of a flexible steel helical coil 3, the coil 3 having situated therein a flexible planar steel strip 6 which extends in an axial direction of the coil and lies on the coil axis. The turns 4 of the coil are accommodated in recesses 7 formed in appropriately staggered manner in the lengthwise edges of the strip 6, the intermediate edge portions 8 projecting between the turns 4. The part 3, 6 is guided in a tubular guide 16 (to be described in detail with reference to FIGURE 4).

Although, in FIGURE 1 the plane of the toothed wheel 1 and the plane of the strip 6 are, for the sake of simplicity, assumed to be co-incident, in practice the plane of the strip 6 will form an angle of 90° with the plane of the driving wheel, so that, in practice, a considerable engagement depth for the teeth of the driving wheel 1 is available between the individual turns 4.

It will be apparent that the part 3, 6 shown in FIGURE 1 can be used advantageously when it has to be arranged in curves in a plane perpendicular to the plane of the strip 6, but it can also be used in cases where it has to to be arranged in other curves provided that there is suitable selection of the minimum bending radius in accordance with the positions of the curves. The minimum radius of curvature of the part 3, 6 in practice amounts to as little as about one-third of the minimum for the cable shown in FIGURE 5, frictional losses also being found to be less.

When the afore-mentioned other curves are employed, the strip 6 automatically takes up such a position relatively to the bending plane that its broad side is approximately perpendicular to the bending plane, but the bending radius of the guide tube must be made larger, in fact up to about three times as large as the smallest permissible bending radius which can be allowed when arranging the part in curves in the optimum plane.

Referring to FIGURE 2, the device shown here differs from that shown in FIGURE 1 in having an insert strip 9 twisted about the coil axis. The smallest possible bending radius varies with the pitch of the twist imparted to the strip 9. The smaller the pitch, the smaller the bending radius permitted. The recesses 7 for accommodating the turns 4 are to be substantially less deep than the cross-sectional thickness of the coil, since the teeth of the driving wheel 1 are continually presented firstly with one of the substantially helical edges and then with one of the flat faces of the strip. Whereas, in the latter case, there is always sufficient space available for engagement of the teeth with the turns 4, in the former case the space available is reduced by the projections 8 between individual turns. The strips 6 or 9 can be made of one of the plastics materials, of rubber, or of steel. The coil 3 could if desired be made of one of the plastics materials.

Referring to FIGURE 3, a supporting element 10 is used instead of the strips 6 and 9 and is tricorn in cross-section, the two flanges 11 and 12 of the element 10 not projecting outwardly beyond the internal periphery of the coil, whereas the third flange 13 is formed with projections 14 between which are recesses 15 in the flange 13. These projections are situated at such a distance from one another that each recess 15 accommodates three turns of the coil 3, each projection 14 engaging between two adjacent turns. The element 10 consists of synthetic plastic material with a longitudinal reinforcement in the form of a steel wire 24 substantially co-axial with the coil 3. If desired, the element 10 may be made of a relatively hard soft rubber with or without an inserted reinforcement such as the wire 24 or a stranded wire.

FIGURE 4 shows an embodiment using an empty helical coil 3, which dispenses with the use of any inserted supporting element. The coil 3 is guided in the tubular

flexible guide 16, the guide being formed with an aperture 17 for allowing engagement of the toothed wheel 1 with the coil 3. The coil 3 is connected, by way of a connecting element not shown in the drawings, to a part 18 which is to be displaced and which can be, for example, a fitting on a sliding window or sliding roof of a vehicle. The guide 16 and the coil 3 are situated behind the plane of the part 18 to be displaced, and the guide is provided over the displacement path of the connecting element with a slot 19 through which extends the connecting element to interconnect the coil 3 and the part 18.

A shortening of the displacement transmitted to the connecting element may occur in this case owing to spring action, but it can be compensated for by turning the wheel 1 onwards by an appropriate amount. Then, in the two end positions of the connecting element, the spring force of the coil 3 so stored up serves to hold the connecting element in the end position.

A guide corresponding to the guide 16 is also provided in the case of each of the other illustrated embodiments according to the present invention.

FIGURE 7 shows the arrangement of one such guide 16 between and beyond the lower edge of a sliding window 20 and a hand-operated crank drive 21, the crank shaft carrying the toothed wheel 1.

In the region 22 the guide 16 is arranged parallel to the direction of displacement of the window 20 and is provided with the longitudinal slot 19.

FIGURE 6 shows another arrangement of one such guide 16, an electric motor 23 being provided instead of the hand crank 21. The motor 23 is mounted under the car bonnet, but could be mounted in the door itself.

The guide is preferably made entirely of metal or synthetic plastic material, but it can also be divided and the divided parts joined by elastic sleeve-like bridging members 25, which construction facilitates assembly in that it permits the guide to be inserted in a folded-up state in the hollow interior of the door, for example.

The present transmission device is also applicable to sliding roofs.

With regard to FIGURE 8, the cross-section of this supporting element is in the form of a flexible helical strip 31 co-axial with the coil and having each convolution connected integrally with an adjacent convolution of the coil. The coil is referenced 32 and is located centrally of the outer surface of the strip 31. The inside of the coil merges into the strip 31. The helical edges 33 and 34 of the strip are substantially circularly rounded in cross-section to give a smaller minimum bending radius. The edges 33 and 34 are pressed one against the other under pre-stressing. Therefore the part 31, 32 can transmit tensile stresses in addition to compressive stresses, the greatest permissible tensile stresses being similar in magnitude of the degree of pre-stressing.

In the embodiment shown in FIGURE 9, to permit the part 31, 32 to accept relatively considerable tensile stresses without the pitch a varying, a tension member 35 is arranged within the coil and is anchored at both ends of the coil. The member 35 is rigidly fixed at the upper end (not shown) of the coil, and is then tensioned and, in this pre-stressed state, has fixed thereto a lead seal 36 which then bears against the lower end of the coil. Instead of the fixed seal 36 it is possible to provide a load-adjusting device, for example by replacing the seal by an internally screwthreaded nut which is screwed onto an appropriate external screwthread at the lower end of the tension member 35, so that the tension in the member 35 can be varied by re-adjusting such a nut (not shown). The tension member can be of one of the plastics materials or can be a single wire.

Referring to FIGURE 10, each convolution of a strip 37 is formed integral, at one helical edge of the strip, with an adjacent convolution of a coil 38. The coil 38 is formed with a helical inwardly facing groove coaxial with the coil, the groove having engaged therein a helical flange 39 formed at the other helical edge of the strip. As the figure shows, the coil 38 engages with some play over the flange 39. This play is kept so small that in many cases it can be ignored so far as the tooth pitch is concerned, but facilitates bending of the part 37, 38. If the modification in length caused by the play would be undesirable, it is possible in this case also to use inside the coil a co-axial tension member 35, as described with reference to FIGURE 9.

In the embodiments shown in FIGURES 1 to 3, slight play of between $\frac{1}{10}$ and $\frac{2}{10}$ mm. can with advantage be allowed between the supporting element 6, 9 or 10 and the coil 3.

The supporting element 6, 9, 10, 31, 37 occupies less than three-quarters of the internal cross-sectional area of the coil.

It is not absolutely necessary for the coil 3 to be made continuous over the entire length of the supporting element 6, 9, 10, 31 or 37, although such a construction may be the most advantageous for cheap mass production of the element. If necessary, the coil could appear on the element only at intervals, so that the finished element has a suitable rack for engagement with the toothed wheel only at intervals.

I claim:

1. A drive-transmission device comprising a toothed wheel, a hollow rack engaging with said wheel and constituted by a flexible, substantially helical coil, having uniformly spaced convolutions, a supporting element occupying less than three quarters of the inner cross-sectional area of said coil, portions of said supporting element constituting connecting means between said coil and said supporting element, thereby preventing relative movement of said coil and said supporting element in radial and longitudinal directions, and guide means extending away from the neighborhood of said wheel in an axial direction of said coil and having the latter extending therein in guided relationship.

2. A device according to claim 1, wherein said supporting element is a flexible planar strip extending in, and along the axis of, said coil, with lateral portions of said strip projecting between said convolutions.

3. A device according to claim 1, wherein said supporting element is a flexible strip extending in, and along the axis of, said coil and being twisted about said axis, with edge portions of said strip projecting between said convolutions.

4. A device according to claim 1, wherein said supporting element is a flexible, substantially helical strip each convolution of which lies nearer to the coil axis than, and is connected integrally with, a corresponding coil convolution, said strip having substantially helical edges which are rounded and in abutment one with the other.

5. A device according to claim 4, further comprising a tension member extending through said strip for urging said edges one against the other, and first and second anchoring means at the respective ends of said strip, and having the respective ends of said tension member anchored therein for bearing on said ends of the strip to urge said edges one against the other.

6. A device according to claim 1, wherein said supporting element is flexible and has tricorn cross-section extending in, and along the axis of, said coil, with portions of at least one of the edges of said supporting element projecting between said convolutions.

7. A drive-transmission device comprising a toothed wheel, a hollow rack engaging with said wheel and constituted by a flexible, substantially helical coil with equally spaced convolutions, guide means extending away from the neighborhood of said wheel in an axial direction of said coil and having the latter extending therein in guided relationship, a flexible, substantially helical strip, each convolution of which lies nearer to the coil axis than a corresponding coil convolution, said strip convolution being connected integrally at one of its sub-

stantially helical edges with said coil convolution, said edges being in abutment one with the other, surface portions of said coil adjacent one of said edges defining a helical, inwardly opening groove extending the length of said coil and substantially co-axially therewith, and helical flange means substantially co-axial with said coil and projecting from another one of said edges into said groove, each of said grooves and said flange means having opposite parallel surfaces of straight-line cross sections and extending radially with respect to said axis, there being an axial play between adjacent ones of said surfaces so as to allow relative angular movement thereof.

8. A drive-transmission device comprising a toothed wheel, a hollow rack engaging with said wheel and constituted by a flexible, substantially helical coil with equally spaced convolutions, guide means extending away from the neighborhood of said wheel in an axial direction of said coil and having the latter extending therein in guided relationship, a flexible, substantially helical strip, each convolution of which lies in, and is connected integrally with, a corresponding coil convolution, and which has substantially helical rounded edges in abutment one with the other, a tension member extending through said strip for urging said edges one against the other, and first and second anchoring means at the respective ends of said strip, and having the respective ends of said tension member anchored therein for bearing on said ends of the strip to urge said edges together.

9. A drive-transmission device comprising a toothed wheel, a hollow rack engaging with said wheel and constituted by a flexible, substantially helical coil with equally spaced convolutions, guide means extending away from the neighborhood of said wheel in an axial direction of said coil and having the latter extending therein in guided relationship, flexible supporting means of substantially uniform cross-section extending axially in said coil and over substantially the whole length thereof, the radial dimensions of said cross-section, with the exception of at least two angularly spaced portions of its periphery, being considerably shorter than those of the internal cross-sectional area of said coil, and portions of said supporting means connecting the latter to said coil.

10. A device according to claim 9, wherein said portions

of the supporting means are longitudinally spaced and project radially outward between said convolutions.

11. A device according to claim 10, wherein surface portions of said coil adjacent said supporting means bound a clearance of from one-tenth to one-twentieth millimeter between said angularly spaced portions and said coil.

12. A drive-transmission device comprising a toothed wheel, a hollow rack engaging with said wheel and constituted by a flexible, substantially helical coil with equally spaced convolutions, guide means extending away from the neighborhood of said wheel in an axial direction of said coil and having the latter extending therein in guided relationship, flexible supporting means of substantially uniform cross-section extending in said coil, in an axial direction and over substantially the whole length of the latter, the radial dimensions of said cross-section, with the exception of at least two angularly spaced portions of its periphery, being considerably shorter than those of the internal cross-sectional area of said coil, a first part of said supporting means lying along the axis of said coil and being adapted to accept tensile stresses, a second part of said supporting means closely encircling said first part and being made from plastic material less adapted to accept tensile stresses than said first part, and portions of said second part projecting radially outward to connect said coil to said supporting means.

13. A device according to claim 12, wherein said first part is made of steel wire.

References Cited by the Examiner

UNITED STATES PATENTS

1,900,512	3/33	Madden	138—129
1,983,962	12/34	Barber et al.	74—458
2,210,733	8/40	Schmid et al.	74—501
2,599,760	6/52	Hanson et al.	74—501

FOREIGN PATENTS

469,399	7/14	France.
546,430	7/42	Great Britain.
787,765	12/57	Great Britain.

BROUGHTON G. DURHAM, *Primary Examiner.*