United States Patent

Kapp

[15] **3,695,410**

[45] **Oct. 3, 1972**

[54] **SERIAL PRINTING MACHINE**

[72] Inventor: **Ludwig J. Kapp,** Montville, N.J.

[73] Assignee: **I/Q Devices, Inc.,** Montville, N.J.

[22] Filed: **Feb. 4, 1970**

[21] Appl. No.: **8,617**

[52] **U.S. Cl.** **197/55,** 197/49, 197/18, 178/34

[51] **Int. Cl.** **B41j 1/40**

[58] **Field of Search** 197/18, 51, 55, 49; 178/34

[56] **References Cited**

UNITED STATES PATENTS

487,986	12/1892	Buckingham	178/34
3,247,941	4/1966	Beattie et al.	197/18 X
3,295,652	1/1967	Sasaki	178/34 X
2,843,243	7/1958	Masterson	197/49 X
3,308,917	3/1967	Stabenau et al.	178/34 X
3,543,906	12/1970	Hladky	197/49
3,366,214	1/1968	Tutert et al.	178/34 X
2,951,439	9/1960	Stutz et al.	101/109 X
3,307,676	3/1967	Hickerson	197/18
3,405,794	10/1968	Means	197/55

Primary Examiner—Edgar S. Burr

Attorney—Morgan, Finnegan, Durham & Pine

[57] **ABSTRACT**

A serial printing machine having a platen and a print carriage, head assembly having a type wheel with a plurality of lines of type, means for moving the type wheel vertically with respect to the platen to select the desired line of type and means for moving the type wheel horizontally to select the desired character; a pair of endless ribbons which are selectable so that only one of them is in printing position between the type character and the platen at any particular instant; a holding coil positioned such that when current flows in the coil, the type hammer is held out of contact with the type wheel; a pair of rails of high magnetic permeability running laterally, essentially parallel to the platen, a plurality of series connected coils wound around high magnetic permeability supports between the rails such that when current flows through the coils, a magnetic field is established which stores potential energy in the type hammer assembly; when the current in the holding coil is turned off and the potential energy is released, the type hammer moves into percussive contact with the type wheel to thereby cause the selected character to be printed.

1 Claim, 18 Drawing Figures

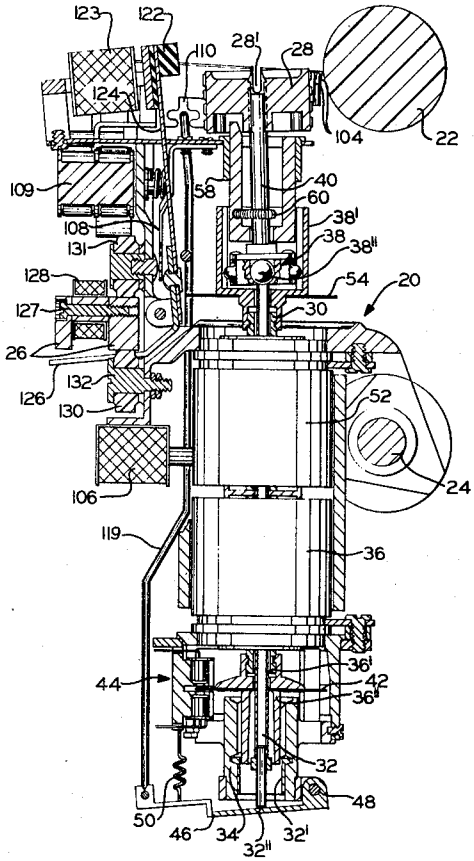

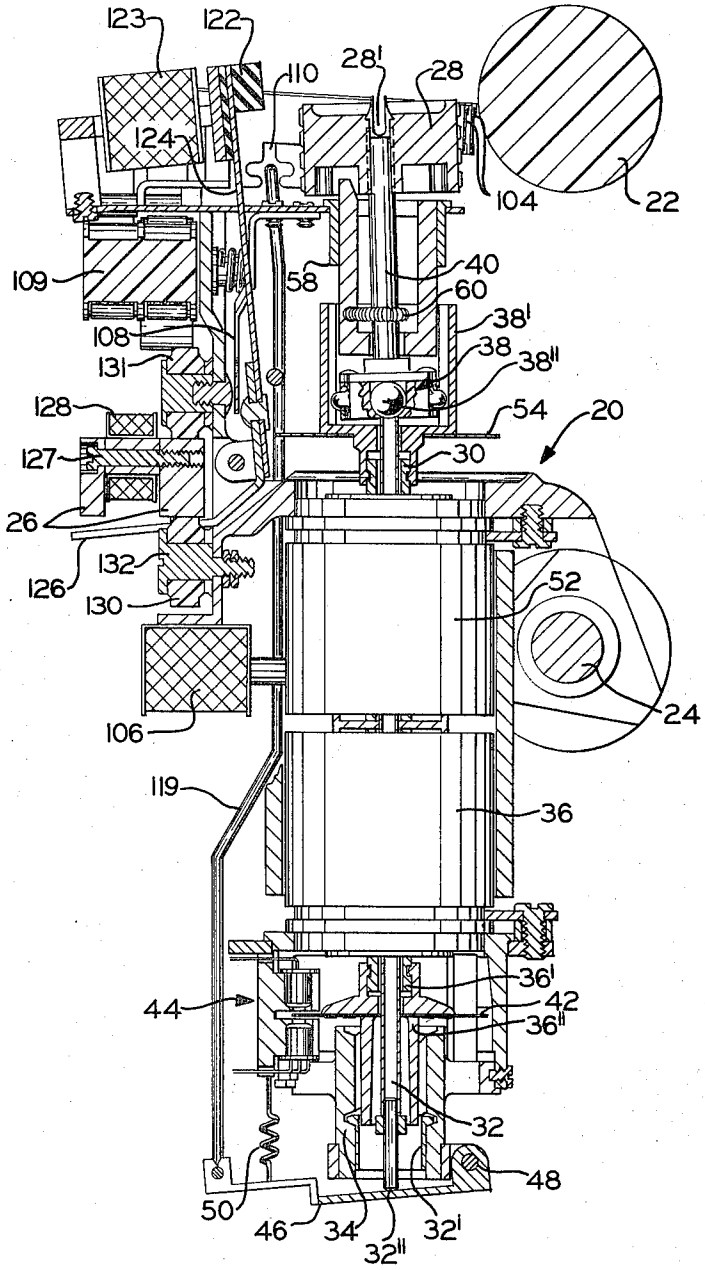

Fig. 1

INVENTOR.
LUDWIG J. KAPP
BY Samuelson & Jacob
HIS ATTORNEYS

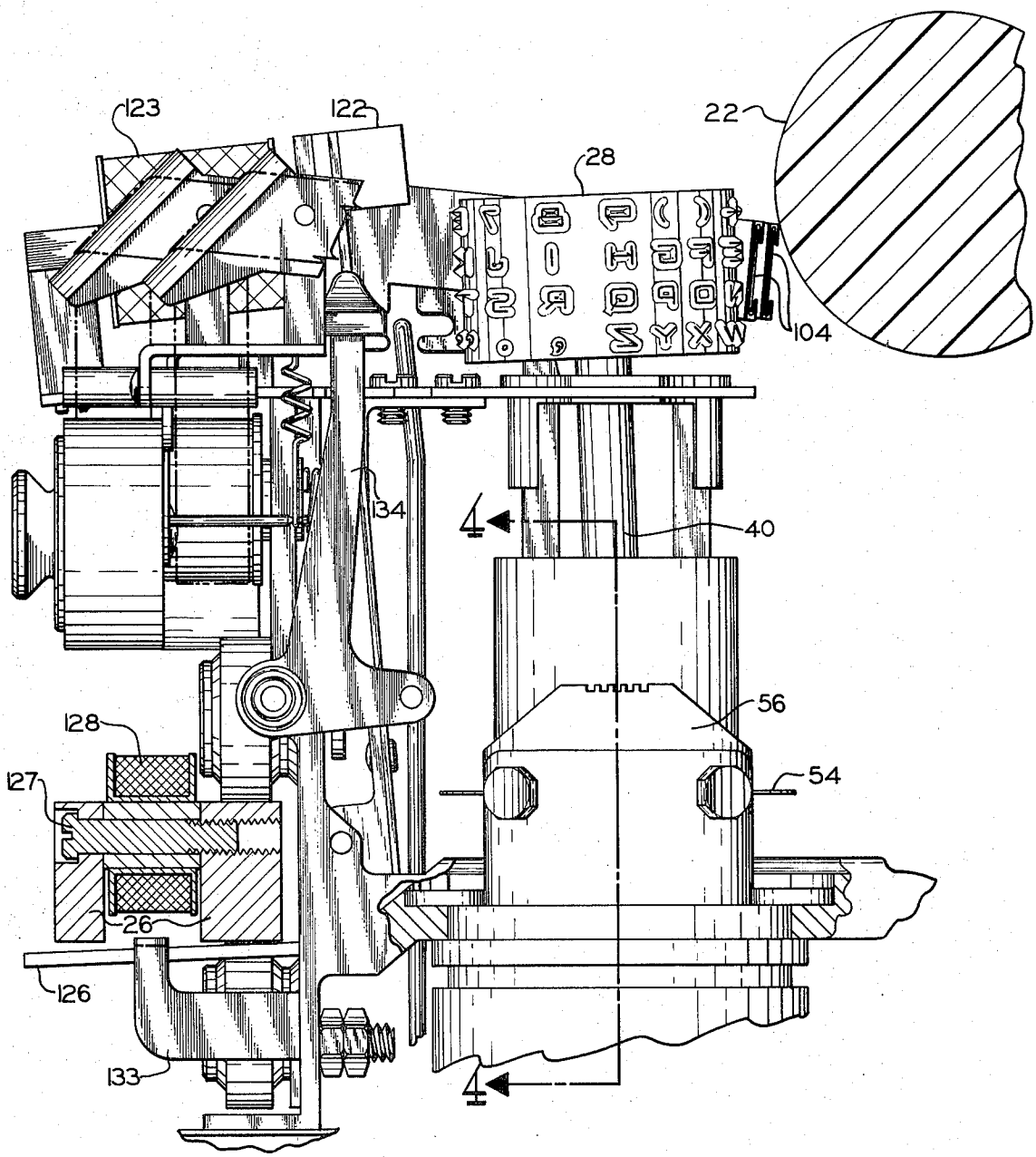

Fig-2

INVENTOR.
LUDWIG J. KAPP
BY
Samuelson & Jacob
HIS ATTORNEYS

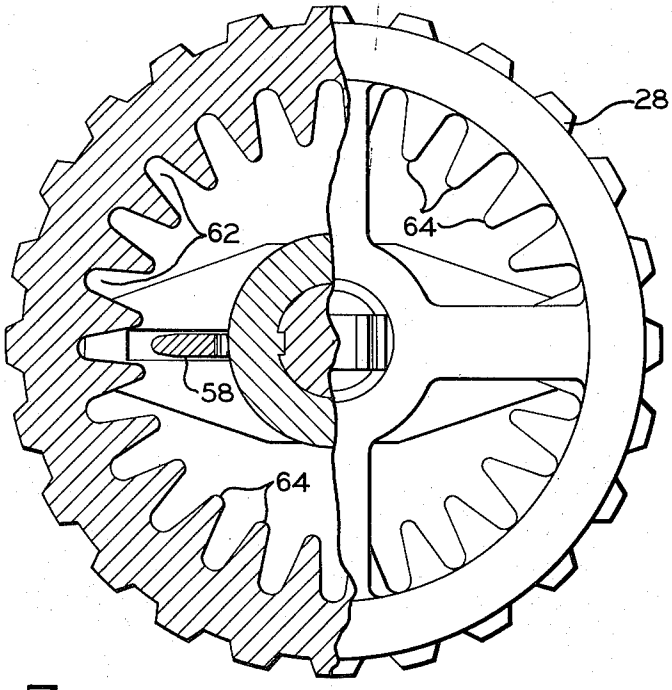

Fig-3

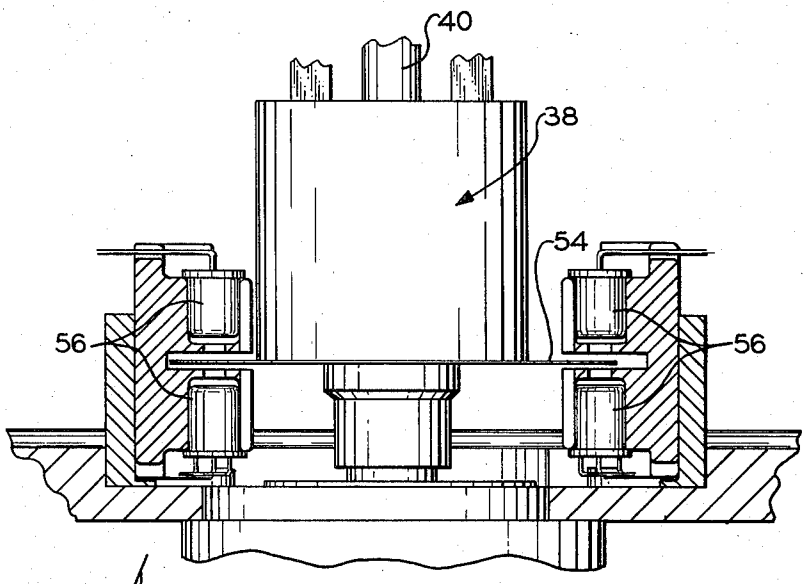

Fig-4

INVENTOR.
LUDWIG J. KAPP
BY
Samuelson & Jacob
HIS ATTORNEYS

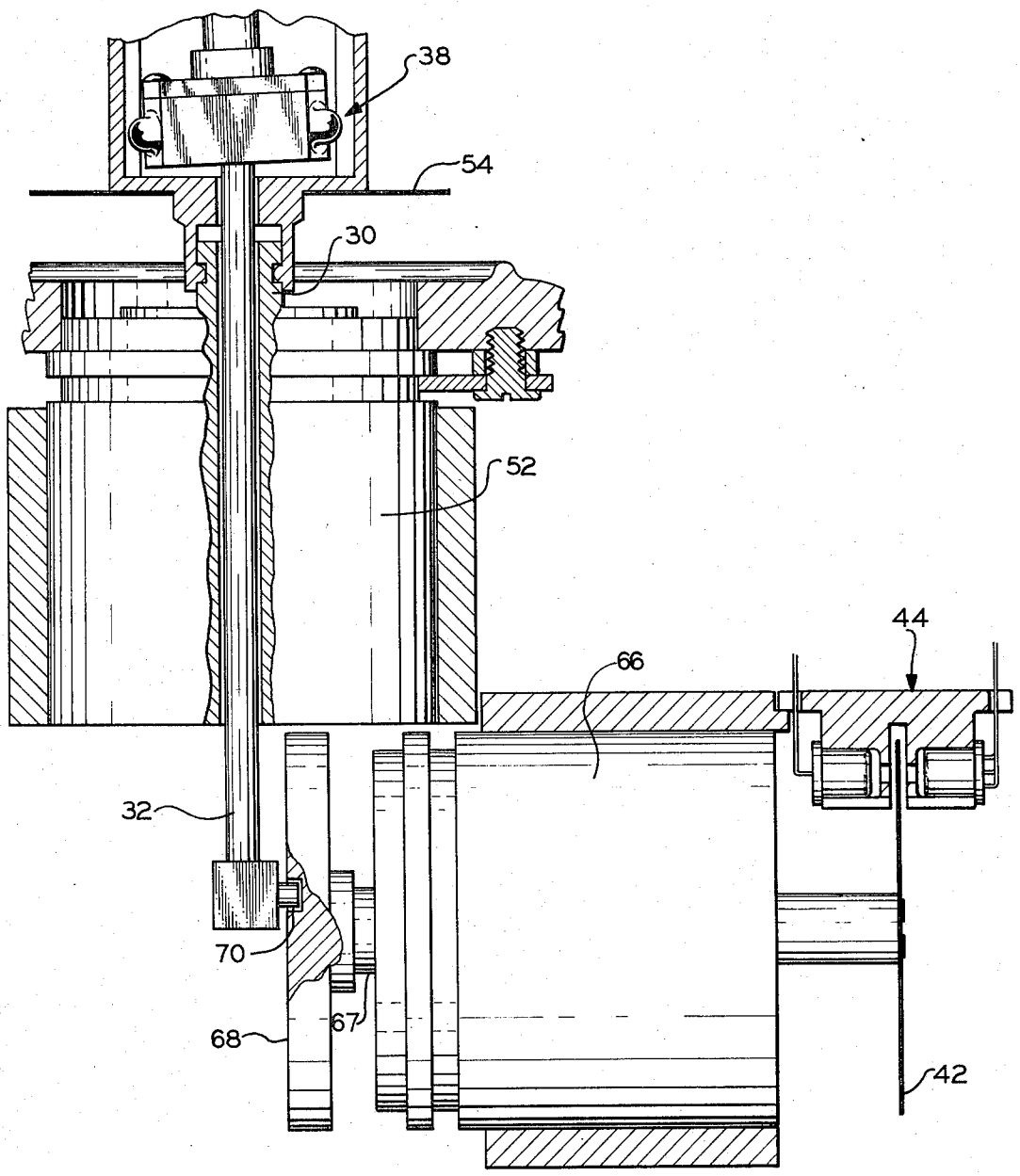

Fig-5

INVENTOR.
LUDWIG J. KAPP
BY Samuelson & Jacob
HIS ATTORNEYS

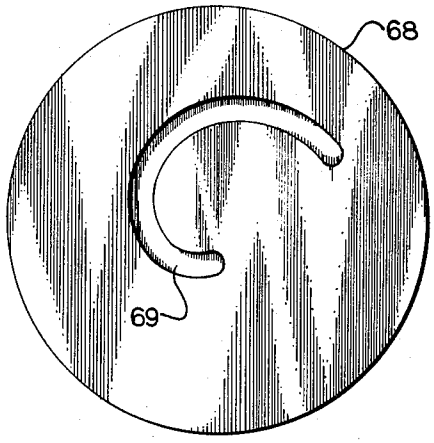

Fig_6

Fig_7

INVENTOR.
LUDWIG J. KAPP
BY
Gunnelson & Jacob
HIS ATTORNEYS

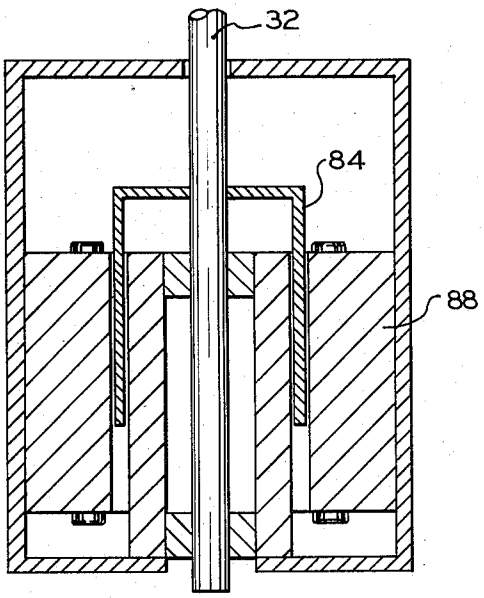

Fig-8

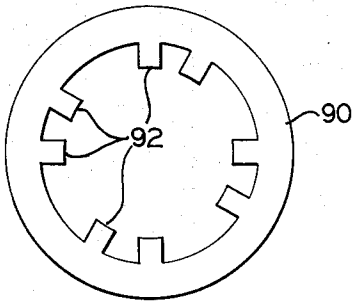

Fig-9

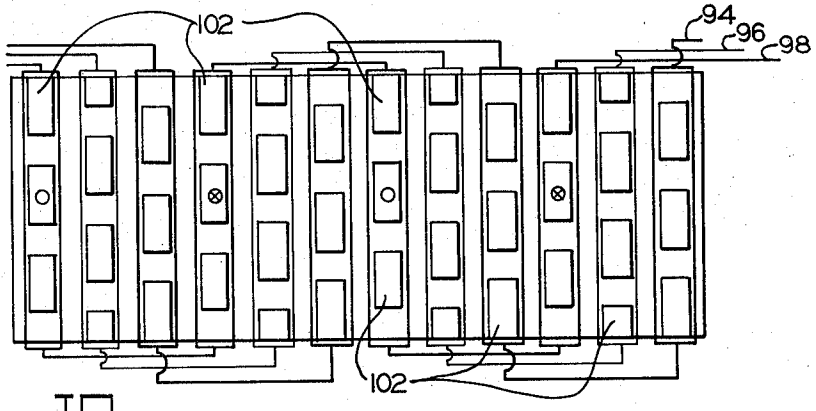

Fig-10

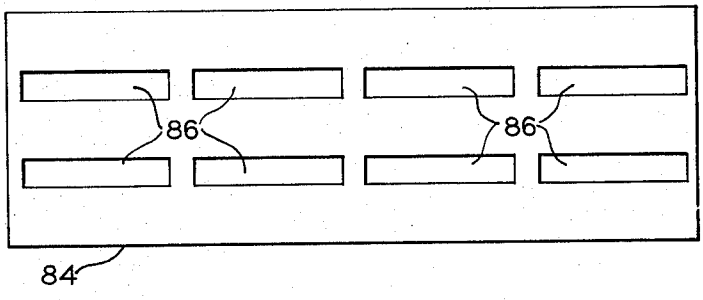

Fig-11

INVENTOR.
LUDWIG J. KAPP
BY Samuelson & Jacob
HIS ATTORNEYS

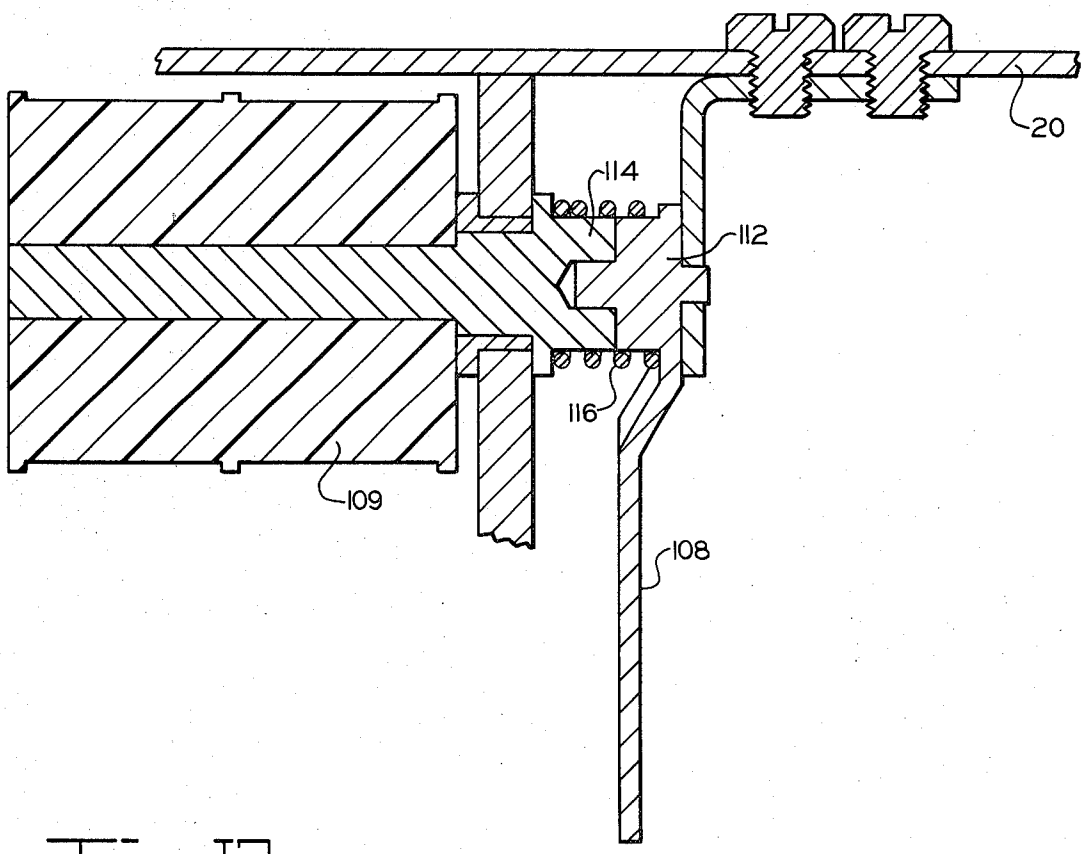

Fig. 12

INVENTOR.
LUDWIG J. KAPP
BY
Samuelson & Jacob
HIS ATTORNEYS

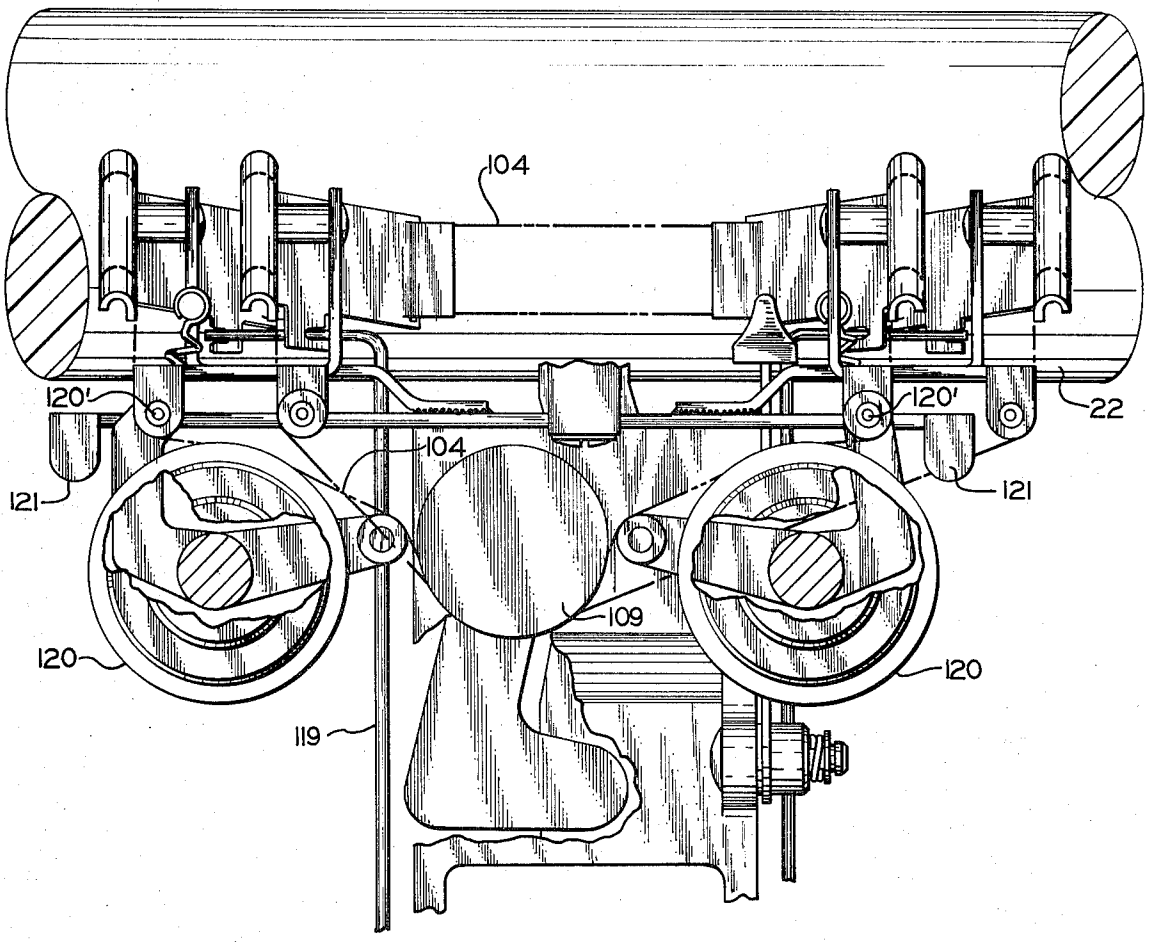

Fig_13

INVENTOR.
LUDWIG J. KAPP
BY Lemmelson & Jacob
HIS ATTORNEYS

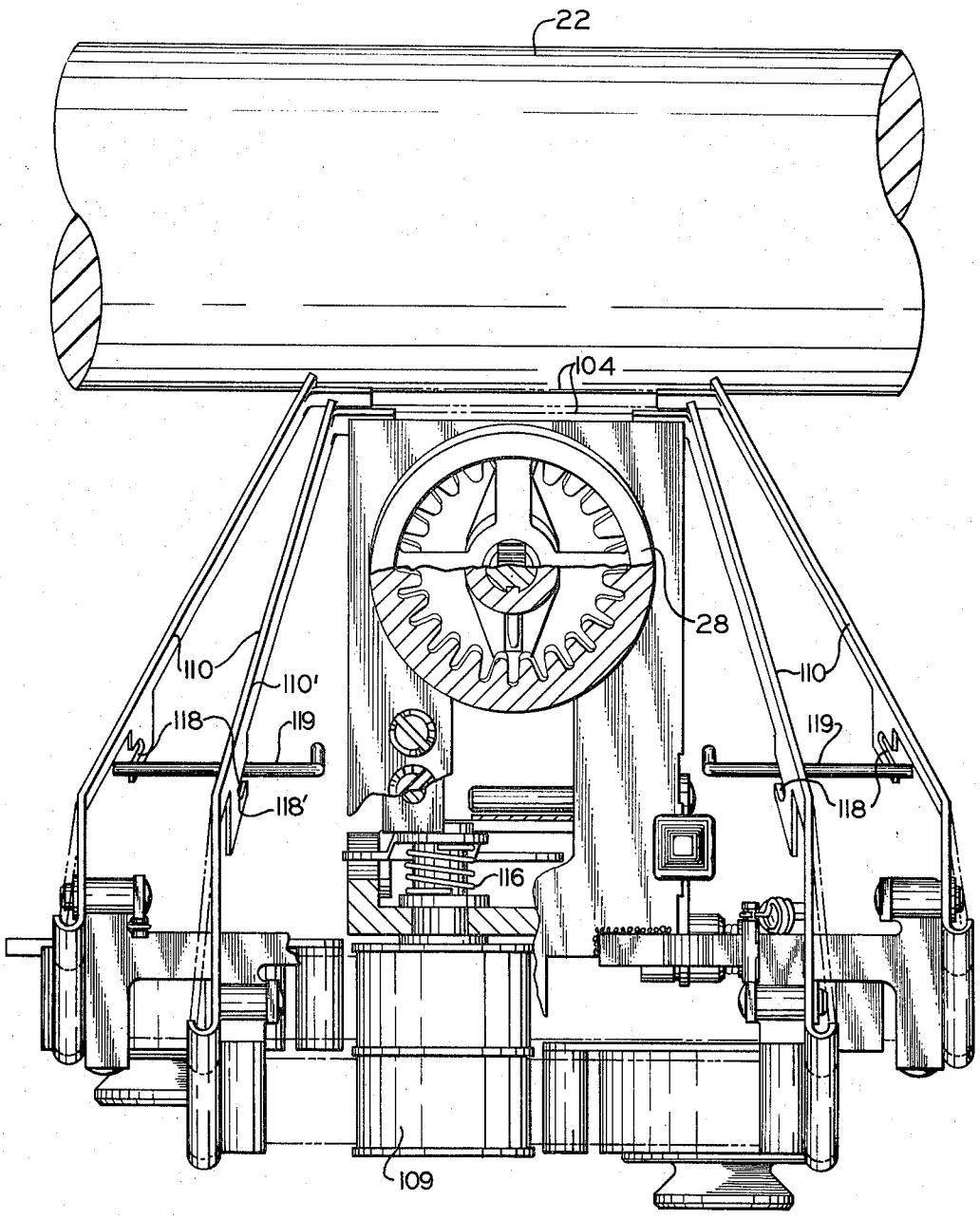

Fig. 14

INVENTOR.
LUDWIG J. KAPP
BY
Samuelson & Jacob
HIS ATTORNEYS

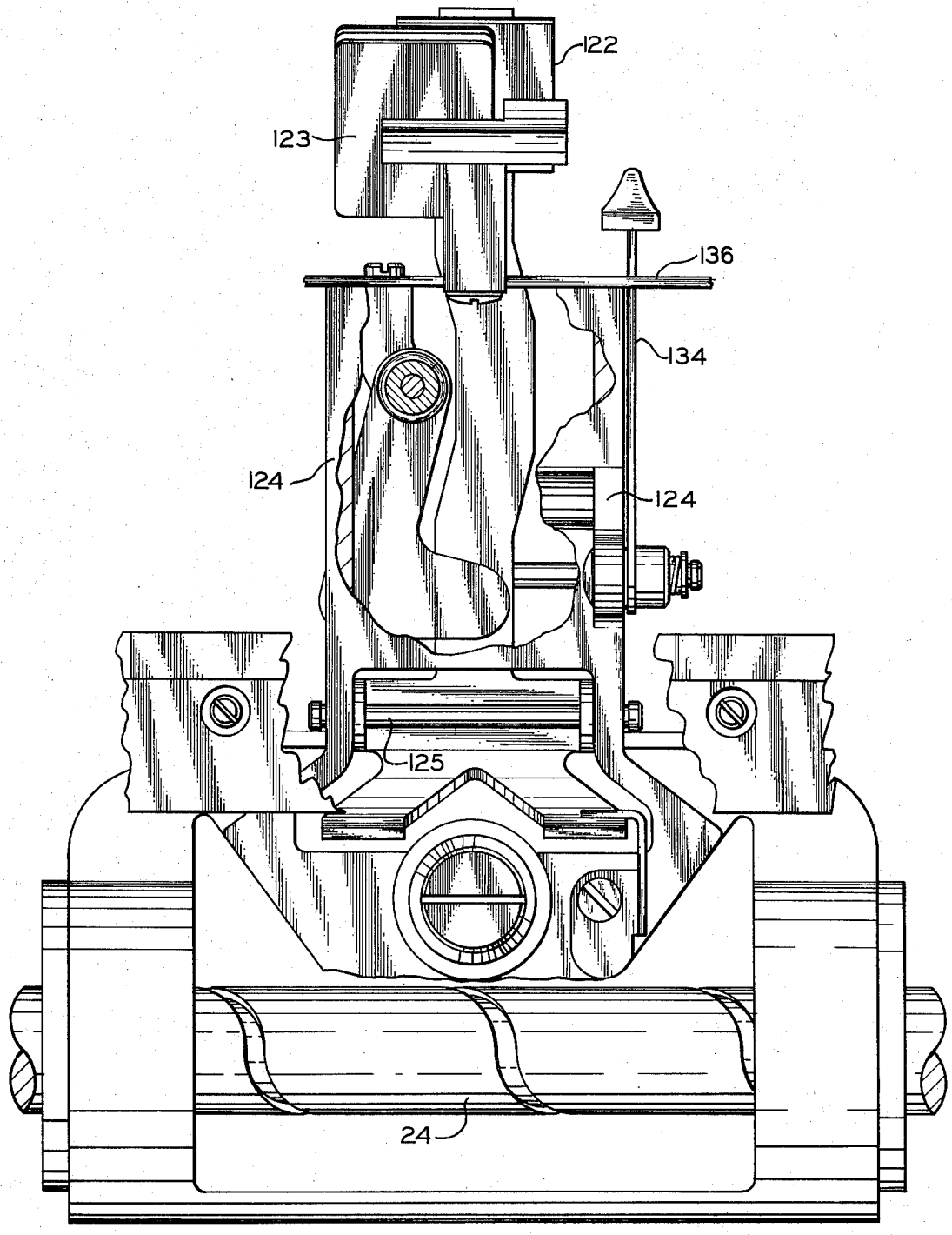

Fig_15

INVENTOR.
LUDWIG J. KAPP
BY
Samuelson & Jacob
HIS ATTORNEYS

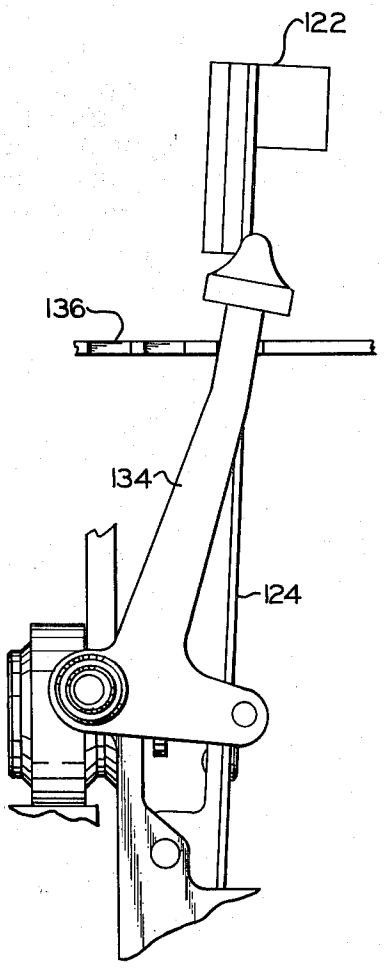

Fig_16

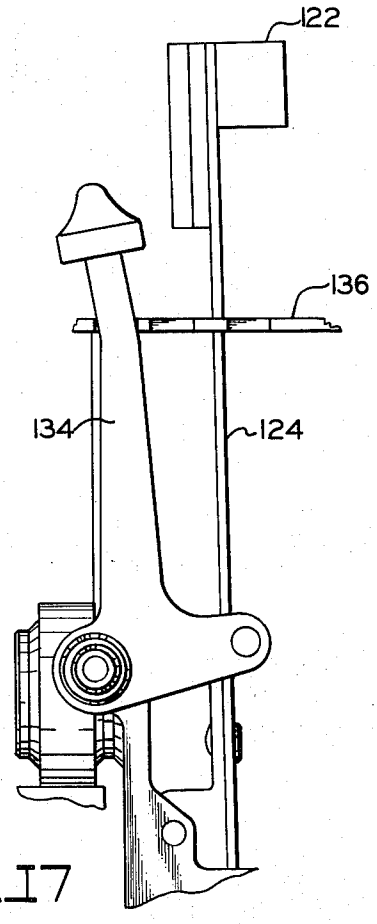

Fig_17

INVENTOR.
LUDWIG J. KAPP

BY Samuelson & Jacob
HIS ATTORNEYS

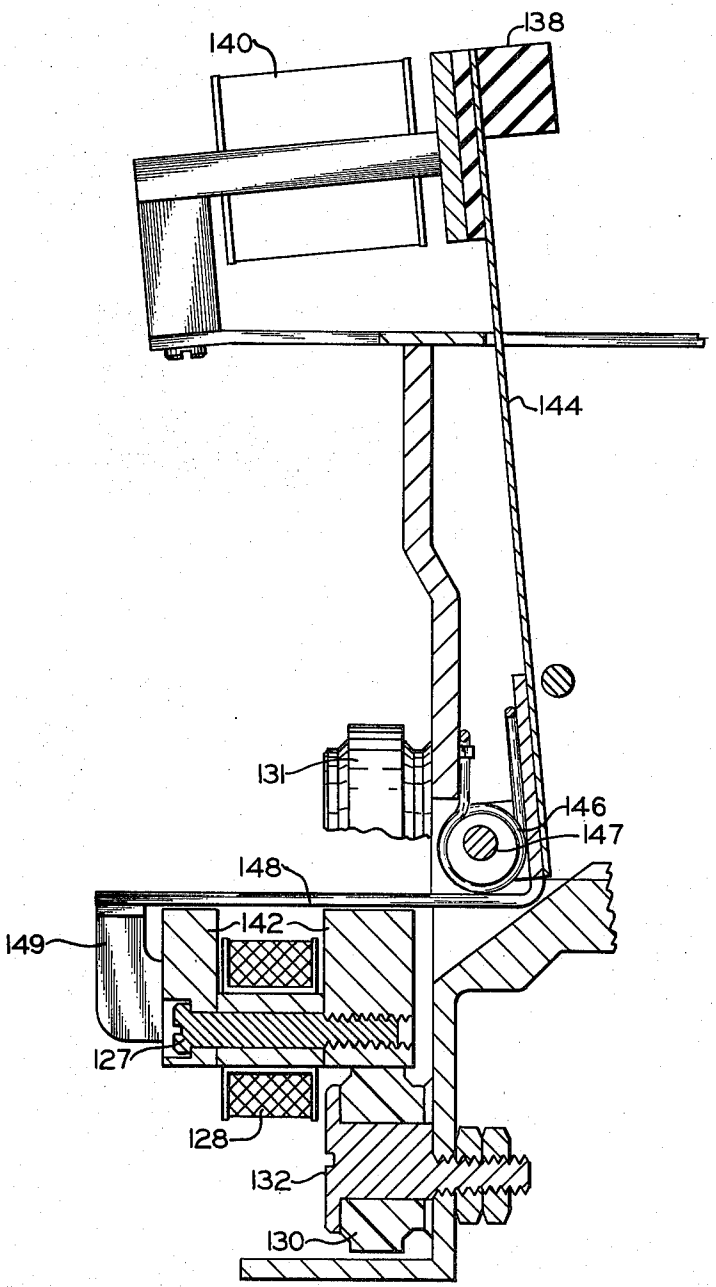

Fig. 18

INVENTOR.
LUDWIG J. KAPP

BY

Samuelson & Jacob

HIS ATTORNEYS

SERIAL PRINTING MACHINE

The invention relates to serial printing machines and in particular to those machines which are used to "print out" from computers.

The so-called "print out" machine is usually controlled by high speed electronic circuits and the printing speed is a function of the slowest mechanical element of the machine. These printing machines are generally of two types: first, those in which the platen moves laterally across the width of the machine and the print carriage, head assembly is stationary; and second, those in which the platen does not move laterally and the print carriage, head assembly moves laterally along the platen. The second type of serial printing machine is faster because the platen is heavier and more massive than the head assembly and it therefore takes longer between strokes when the platen is moved that when the head assembly is moved.

To increase the printing speed of the machine in which the head assembly moves, every effort must be made to make the assembly lighter without comprising or adversely affecting the printing quality. This can be accomplished by utilizing cooperating elements on the nonmoving portions of the machine to actuate elements on the head assembly.

It is also desirably to be able to utilize one of a number of lines of type interchangeably while printing at high speed. To accomplish this conveniently, it is necessary to use a print or type wheel which contains a number of lines of type which are readily available on command of the operator. Ideally, the type wheel should have a plurality of these lines of type, each of which contains a plurality of characters.

Mass of the print carriage, head assembly can be further reduced by utilizing endless ribbons which can be reinked after they have passed beyond the printing station and before they reach the printing station again. By using a pair of such ribbons, one is able to use different ink colors or to double the "down time" for ribbon changing by using two ribbons with the same ink color. By reinking the ribbon during each cycle, it is possible to use ribbons of shorter length than is possible with ribbons which are not reinked during use.

Print carriage, head assembly mass can be still further reduced by utilizing hammer actuating means located on the fixed portion of the machine rather than on the print carriage, head assembly.

Broadly, the invention comprises a platen-type, serial printing machine wherein the platen does not move laterally of the machine, the machine having a print carriage, head assembly which moves parallel to the platen. The head assembly carries a type or print wheel which is generally cylindrical in shape and upon which are the type fonts to be printed. There is a plurality of lines of type on the type wheel, preferably in rows around the type wheel with each line at a different level from the other lines. The type wheel is mounted on a shaft which rotates to select the desired character and which moves longitudinally in a direction substantially perpendicular to the plane of rotation of the type wheel to select the desired line.

A pair of endless ribbons are mounted on the head assembly in conjunction with a selecting means which moves the desired one into position between the character on the type wheel and the platen. The ribbons are reinked after moving from the printing position and before again arriving at the printing position.

The hammer is mounted on the print carriage, head assembly and is held out of contact with the print wheel by a holding solenoid. When the current is turned off momentarily, the hammer is released and moves toward the type wheel and strikes it sharply. This action pushes the desired character against the ribbon and makes an impression on the medium (such as paper) which is on the platen. To reduce weight, a large part of the hammer actuator is mounted on the frame of the printing machine rather than on the print carriage, head assembly.

The hammer actuator comprises a pair of spaced rails of high magnetic permeability material which run essentially parallel to the platen and which are mounted on the frame of the machine. The rails are held in spaced relationship by a plurality of longitudinally spaced holding elements of high magnetic permeability material. A coil is wound over each holding element and the coils are connected in series. The hammer is mounted on a flexible arm which pivots between the holding position and the striking position and is provided with a pole piece which travels along the rails and pulls up toward the coil when current is flowing in the coil thereby storing potential energy in the flexible hammer arm. The arm is kept in the retracted position until it is released by turning off the current in the holding electromagnet.

The rails extend downwardly from the coils so that a very long, horseshoe magnet is formed when current flows in the coils. The coils are spaced so that sufficient magnetic force is applied to the hammer pole piece regardless of the lateral position of the print carriage, head assembly in the machine.

It is an important object of the invention to provide a serial printing machine which may be used for rapid print out of a computer.

It is a further object of the invention to provide such a machine in which the print carriage, head assembly moves laterally across the machine with respect to the platen and the platen is in fixed lateral position in the machine.

It is a still further object of the invention to provide such a print carriage, head assembly in which the type wheel rotates about an axis which is not in the plane of the platen to select the desired character and moves in a direction perpendicular to its plane of rotation to select the desired line or level of type.

It is a still further object of the invention to provide such a print carriage, head assembly in which the type wheel is mounted on the shaft which rotates to select the desired character and which moves longitudinally to select the desired line or level of type.

It is a still further object of the invention to provide such a print carriage, head assembly in which the shaft which rotates the type wheel to select the desired character is hollow and another shaft is moved longitudinally inside this hollow shaft to select the desired line or level of type.

It is a still further object of the invention to provide such a print carriage, head assembly in which the means for rotating the type wheel is a motor and the means for moving the shaft longitudinally is a motor.

It is a still further object of the invention to provide such a print carriage, head assembly wherein the means for rotating the type wheel is a motor and the means for moving the shaft longitudinally is a solenoid.

It is a still further object of the invention to provide a print carriage, head assembly which carries a pair of endless ribbons and including means for selecting either of the ribbons for interposition between the desired character and the platen.

It is a still further object of the invention to provide a serial printing machine having a platen, a pair of rails mounted in the machine and running substantially parallel to the platen, a plurality of series-connected coils mounted between the rails so that when current flows in the coils the rails become a long, horseshoe magnet and serve to move the hammer mounted in the print carriage, head assembly so as to strike the type wheel and print the desired character.

It is a still further object of the invention to provide such a hammer actuating mechanism which includes means for adjusting the force with which the hammer strikes the type wheel.

These and other objects, advantages, features and uses will be apparent during the course of the following description, when taken in conjunction with the accompanying drawings, wherein:

FIG. 1 is a side elevational view, partly in section, of a print carriage, head assembly of the invention, shown actual size;

FIG. 2 is a vertical end view of the upper portion of the print carriage, head assembly of FIG. 1, shown twice actual size;

FIG. 3 is a plan view, partly broken away, of the type head used with the print carriage, head assembly of FIG. 1, shown four times actual size;

FIG. 4 is a sectional view taken along the lines 4—4 of FIG. 2, viewed in the direction of the arrows, shown twice actual size;

FIG. 5 is a side elevational view of an alternative construction for selecting the type font and the character which may be used with the print carriage, head assembly of FIG. 1, shown twice actual size;

FIG. 6 is an end elevational view of the cam used with the font selection motor of FIG. 5, shown twice actual size;

FIG. 7 is a side elevational view of another alternative construction for selecting the type font and the character which may be used with the print carriage, head assembly of FIG. 1, shown twice actual size;

FIG. 8 is a side elevational view of still another alternative construction for selecting the type font which may be used with the print carriage, head assembly of FIG. 1, no scale is shown;

FIG. 9 is a plan view of a stator lamination used in the embodiment of FIG. 8;

FIG. 10 is an opened up view, in plan, of the stator used with the embodiment of FIG. 8;

FIG. 11 is an opened up view, in plan, of the movable armature used with the embodiment of FIG. 8;

FIG. 12 is a side elevational view, partly in section, of the ribbon drive mechanism used with the print carriage, head assembly of FIG. 1, shown four times actual size;

FIG. 13 is a side elevational view, partly broken away, of the ribbon feed mechanism used with the print carriage, head assembly of FIG. 1, shown twice actual size;

FIG. 14 is a top view of the ribbon feed mechanism used with the print carriage, head assembly of FIG. 1, shown twice actual size;

FIG. 15 is a vertical, front view, partly cut away, of the ribbon feed mechanism used with the print carriage, head assembly of FIG. 1, shown twice actual size;

FIG. 16 is an elevational view of the impression control used with the print carriage, head assembly of FIG. 1 in the darkest position, shown twice actual size;

FIG. 17 is a view similar to that of FIG. 16 showing the same impression control in the lightest position, shown twice actual size; and

FIG. 18 is a side elevational view of the hammer and associated parts used with the print carriage, head assembly of FIG. 1, shown twice actual size.

In the drawings, wherein, for the purpose of illustration, there are shown, preferred embodiments of the invention, the numeral **20**, designates a print carriage, head assembly used with a serial printing machine of the invention.

Print carriage **20** is driven laterally across the machine with respect to platen **22** by means of drive shaft **24** and is supported at its front by laterally extending rails **26**. Type wheel **28** contains several lines or rows of characters and is rotated and moved up and down to select the desired character by its support shaft **40** and the ball and socket assembly **38**.

Character selection is accomplished by rotating type wheel **28** into the proper location with respect to the platen **22**. The type wheel rotation is controlled by motor **52** and its hollow rotor shaft **30**, to which the housing **38'** and selection disk **54** are attached. As the housing **38'** turns, it controls at the same time the rotational positioning of the ball and socket assembly **38** and the mounting shaft **40**.

Character selection is sensed by means of character selection disk **54** and two photoelectric cell assemblies **56** (one of which is shown in FIG. **2** and both of which are shown in FIG. **4**). By utilizing a pair of photoelectric cell assemblies and a logic control circuit (details not shown), it is possible to arrange the system so that the rotation of character selection motor **52** will never be greater than 180°.

The longitudinal movement of the ball and socket assembly **38** is controlled by the inner shaft **32**. The motion is generated by means of rotating motor **36**, its hollow rotor shaft **36'** and the attached driver **36''**. The rotational movement is further transmitted to a screw **32'**, which can slide up and down on the driver unrestricted as it turns. The longitudinal position of screw **32'** is controlled by a screw nut **34** adjustably attached to the frame of print carriage **20**. As the screw **32'** is turned it follows the screw thread up and down. Screw **32'** is fixed to the lower end of shaft **32**. The shaft extends then upwards through both hollow motor shafts **36'** and **30** and its upper terminal is the ball **38''** of the ball and socket assembly **38**.

At the same time as the socket assembly **38** is turned by housing **38'** it is moved longitudinally by the ball **38''**. This in turn serves to place the desired type in alignment with the selected ribbon and platen **22**.

The type line or level is selected by means of selection disk **42** and photoelectric cell assembly **44**. The

level selection disk is suitably slotted so that its position may be sensed by the photoelectric cell assembly **44**.

During the non-printing mode of the machine, screw **32'** will always be moved down into its lowest position, and in turn, the printwheel will be out of alignment with the platen to give the operator an unobstructed vision of the printing.

To prevent rotation of the type wheel **28** during the percussion portion of the printing cycle a locking arm **58** is biased into the tooth space **62** as the printwheel is moved towards the platen. The detent is part of the serrated internal surface of type wheel **28**. A toroid spring **60** will insure the proper home position of print wheel **28** between printouts with sufficient clearance between locking arm **58** and the top of the serration **64** for the rotational motion (as shown in FIG. **3**).

In addition, a quick connector **28'** on the print wheel permits the operator to change the print wheel instantaneously for a greater selection of type fonts.

In FIGS. **5** and **6** there is illustrated an alternative embodiment for positioning the print wheel to select a character. Motor **52** rotates shaft **30** (which is a hollow tube) in conjunction with character selection disk **54** as has been described previously. Motor **66**, which is the level selection motor, is mounted substantially perpendicular to the longitudinal dimension of shaft **30**. It operates in conjunction with level selection disk **42** and photoelectric cell assembly **44** for level selection by moving shaft **32** longitudinally.

Motor **66** is provided with a shaft **67** on the end of which there is mounted a cam housing **68**. Cam housing **68** is provided with cam race **69** in which cam follower **70** rides. As motor **66** rotates, as controlled by selection disk **42**, cam follower **70** is moved in race **69** to thereby raise and lower type wheel **28** due to the longitudinal movement of shaft **32**.

In FIG. **7**, there is illustrated still another embodiment of a construction for moving shaft **32** longitudinally to select the appropriate type line.

Motor **52** rotates hollow shaft **30** to rotate the type wheel for character selection. Shaft **32** is moved longitudinally by electromagnetic solenoid **72**. Armature **74** is moved within solenoid **72** and acts in conjunction with spring **76** to move shaft **32** longitudinally. The level position of the type wheel is sensed by sensors **78** and **80** has its position controlled by sensing circuit **82**. The upward movement of the solenoid plunger is a function of the current through the solenoid. A certain level is given as an equilibrium between the force produced by the solenoid and the force opposing it as a result of the compression of the spring. The current output of the amplifier is a function of the desired level.

Still another embodiment of line selection means which may be used with the machine of the invention is shown in FIGS. **8–11**. Shaft **32** is connected to cup-shaped, cylindrical armature **84** which is formed of magnetic material and is provided with a number of apertures **86** as shown in FIG. **11**. FIG. **11** is an unfolded view of the armature **84**.

Stator **88** is formed of laminations of magnetic material such as is illustrated in FIG. **9** and is designated as **90**. Laminations **90** are provided with projections **92** and the laminations are stacked as shown in the unfolded view of FIG. **10**.

When the stator laminations are stacked, the individual projections **92** form winding guides for the coils **94**, **96**, **98** and **100** and, when current flows, form magnets **102** which attract the magnetic elements **86** to raise and lower armature **84**. Sensing of the longitudinal position of shaft **32'** may be accomplished in the same manner as has been described for the embodiment of FIG. **7**.

The machine illustrated and described herein utilizes two endless ribbons **104**, one of which is selected for interposition between a selected character and the paper on the platen. During "no print" cycles of the machine both ribbons are in a down position for an unobstructed view of the printing. The ribbon is lifted into printing position by two rods **119** located at each side of the print carriage and cooperate with guide slots **118** of guides **110**. Every time shaft **32** and its extension **32'** is moved up into a printing position it allows arm **46**, which is pivoted at **48** and biased upwards by spring **50**, to follow and in turn lift rods **119**.

The ribbons are driven by drive wheel **109** which has a friction coated circumference. The drive wheel is actuated through the clutch which is mounted to frame **20** and which is comprised of hub elements **112** and **114** and spring **116** and activating arm **108**. The activating arm **108** of the ribbon drive **109** functions like the weight in a self-winding watch. While the print carriage is accelerated, the pivoted weight lags behind, and when the carriage is being decelerated, the weight keeps moving and the one way spring clutch **116** grips and turns the ribbon drive hub **109**.

The ribbons are driven by ribbon drive **109** in a closed circuit which includes ribbon drive wheel **109** and ribbon inking mechanisms **120**. Each ribbon is inked by the appropriate inking mechanism **120** and is inked in the course of its travel between its leaving the position wherein it is between the type wheel and the platen and its arriving in that position for the next time. Inking is accomplished by the ribbon's pressing against the ink retaining element in the inking mechanism. To replenish the ink supply, the reinking roller of the ribbon inking mechanism can easily be replaced by swinging the tension arms pivoted at **120'** against limit stop **121**. The same procedure has to be followed if a ribbon should be replaced.

The second ribbon can be selected by activating solenoid **106**. Rods **119** cooperate then with guide slots **118'** of ribbon guide **110'**. In the center position neither ribbon moves up, this position is called the stencil position.

Print carriage, head assembly **20** rides on rails **26** by means of rollers **130** and **131**. The position of the rollers with respect to the rails is adjusted by means of off-center screw **132**. Rails **26** are held in spaced relationship by a plurality holding means shown in FIG. **1** as screw **127**. The screws are preferably of magnetizable, high permeability material and a coil **128** is wound around each of them. These coils are spaced along the rails and are connected in series. The rails **26** depend downwardly, as shown in FIG. **1** to form an elongated horseshoe magnet extending laterally of the machine.

Holding solenoid **123** holds hammer **122** in its first position, out of contact with the type wheel. Now, when current flows in the coils **128**, pole piece **126** is drawn upward toward rails **26** but is prevented from

touching the coil or rails by stop **133**. The holding solenoid **123** holds the hammer away from the print wheel. When the current is turned off in holding solenoid **123**, the bifurcated hammer arm **124**, (which is a leaf spring) moves to its second position (in contact with the type wheel). This construction is best seen in FIG. **15**. The percussive force impresses the selected character against the ribbon and in turn prints the selected character on the paper on the platen **22**. The current in the magnetic rail solenoids stays on during that period but is turned off prior to applying current to the holding solenoid to catch the returning print hammer. Then, the cycle is repeated to restore the potential energy in the spring.

The strength of the impression is controlled by impression control arm **134** which fits in the notches in element **136** and serves to lengthen or shorten the pivot distance of arm **124**. In FIG. **16**, the impression is the darkest and in FIG. **17**, it is the lightest. In FIG. **1**, the impression control is in an intermediate or normal position.

In FIG. **18**, there is illustrated another embodiment of hammer assembly which may be used in machines of the invention. Rails **142** form an elongated horseshoe magnet with its poles pointed upward. Rollers **130** and **131** and off center screw **132** operate as has been previously described. Holding means **127** and coils **128** operate in conjunction with rails **142** as they did in conjunction with rails **26**.

When current flows in coils **128**, pole piece **148** is drawn toward rails **142** and is prevented from touching them by stop **149**. This stores potential energy in the system by placing spring **146**, which is wound around pivot **147**, in tension. The current in holding coil **140** is turned on. Now, the current in coils **128** is turned off but the arm **144** will not move forward until the current in coil **140** is turned off. When the current in holding coil **140** is turned off, the hammer **138** moves from its first position (out of contact with the print wheel) to its second position (in percussive contact with the print wheel).

Operation of the machine, including line selection, character selection, ribbon selection, and hammer actuation may be controlled from a computer output or from a manually or automatically operated keyboard or from punched or magnetic tape in any manner which is well-known in the art. It only being sufficient that the appropriate signals and voltages be applied, as required.

While particular embodiments of the invention have been shown and described, it is apparent to those skilled in the art that modifications are possible without departing from the spirit of the invention or the scope of the subjoined claims.

The embodiments of the invention in which an exclusive property or privilege is claimed are defined as follows:

1. In a print carriage head assembly for a serial printing machine having a frame and a type wheel mounted in the head assembly frame for rotating around an axis, said type wheel having a plurality of lines of type and a plurality of characters in each line, the improvement which comprises:

a shaft having two ends, one end of which is connected to the type wheel;

a hollow tube around said shaft;

motor means for rotating said hollow tube;

means intermediate said hollow tube and said shaft for rotating said shaft when said hollow tube is rotated for rotating said type wheel to selected character positions; and

means for moving said shaft axially through said hollow tube for moving said type wheel to selected desired type line positions, said moving means including means connected to the other end of said shaft;

said means for moving said shaft axially through said hollow tube and for moving the type wheel to the desired line selection position includes:

an armature, which is generally cup-shaped and is formed of nonmagnetizable material, affixed to said shaft;

a plurality of elements of magnetizable material affixed to the armature in a predetermined, space pattern;

a laminated stator mounted within the cup shaped armature;

a plurality of coils wound on the stator in a predetermined pattern and connected such that when current flows in a predetermined one of the said coils, the magnetizable elements affixed to the armature are attracted by the established magnetic field and moved to a predetermined position with respect to the stator to thereby move the type wheel to select the desired type line.

* * * * *