(19) DANMARK

(10) DK/EP 3058150 T3

(12) Oversættelse af europæisk patentskrift

Patent- og Varemærkestyrelsen

(51) Int.Cl.: *E 04 C 2/16 (2006.01)* *E 04 C 2/32 (2006.01)* *E 04 C 2/34 (2006.01)*

(45) Oversættelsen bekendtgjort den: **2019-03-11**

(80) Dato for Den Europæiske Patentmyndigheds bekendtgørelse om meddelelse af patentet: **2018-11-14**

(86) Europæisk ansøgning nr.: **14809504.5**

(86) Europæisk indleveringsdag: **2014-10-16**

(87) Den europæiske ansøgnings publiceringsdag: **2016-08-24**

(86) International ansøgning nr.: **IB2014002136**

(87) Internationalt publikationsnr.: **WO2015056083**

(30) Prioritet: **2013-10-16 FR 1360039**

(84) Designerede stater: **AL AT BE BG CH CY CZ DE DK EE ES FI FR GB GR HR HU IE IS IT LI LT LU LV MC MK MT NL NO PL PT RO RS SE SI SK SM TR**

(73) Patenthaver: **Le, Hubert, 5 rue des Orchidées, 67390 Ohnenheim, Frankrig**

(72) Opfinder: **Le, Hubert, 5 rue des Orchidées, 67390 Ohnenheim, Frankrig**

(74) Fuldmægtig i Danmark: **AWA Denmark A/S, Strandgade 56, 1401 København K, Danmark**

(54) Benævnelse: **Konstruktionsmodul baseret på pap samt fremgangsmåde til fremstilling af modulet**

(56) Fremdragne publikationer:
EP-A2- 0 216 497
FR-A1- 2 951 205
US-A- 1 914 207
US-A- 3 743 568
US-A1- 2009 282 778

CONSTRUCTION MODULE BASED ON CARDBOARD AND CONSTRUCTION METHOD IMPLEMENTING SAID MODULE

Technical scope:

This invention relates to a construction module, in particular for the construction of a building, comprising at least one parallelepipedic block defining at least a height h, a width l and a cross-section s of said module, this block being made of a plurality of superimposed corrugated cardboard layers, said cardboard sheets comprising flutes, said superimposed cardboard sheets being glued together to form a compact, rigid, bearing and self-supporting cardboard block, and said cardboard block being entirely and tightly wrapped in a covering envelope to form an air and watertight construction module.

This invention also relates to a construction method implementing said construction module.

Prior art:

The current standards tend to improve the thermal and acoustic insulation of buildings while reducing the costs. The materials used must also be easily recyclable.

Cardboard is used in the building sector, but only in combination with other materials. It has for example been suggested to use a construction module based on cardboard that is sufficiently rigid to play a structural role, such as the one described in publication FR 2 951 205. However, this material is not water resistant and its exposed surface(s) must be protected by an impermeable film. The construction module is made of several cardboard layers glued together and, to ensure tightness, the impermeable film is applied on the mounted module. One notes that this film is difficult to apply and sometimes shows "bubbles" on the surface, which might impair the tightness and aesthetic of the finished module.

Another example of a composite construction panel for the building sector is described in publication US 2009/0282778. It comprises a cardboard-based internal structure and an external structure out of cement, resin, wood or the like. The internal structure is made of a plurality or corrugated cardboard sheets, impregnated with resin to withstand humidity, superimposed, crossed and glued together to form a block. The internal structure is covered on its two parallel sides with the external structure. The walls are built by assembling several composite panels placed side by side and anchored to the floor and to the ceiling with anchoring elements. The impregnation of every cardboard sheet is tedious and costly. Moreover, the implementation process does in no way guarantee the global stability of the building, since the assembly of the composite panels ensures neither bracing nor load absorption.

Publication US 3,743,568 proposes a self-supporting structural panel for the construction of buildings, made of an accordion-folded corrugated cardboard sheet or of cylindrical tubes, wherein the flutes or the tubes are oriented vertically along the height of the panel to give it its mechanical strength. However, the implementation of such panel does not seem to be able to ensure the global stability of the building, neither its bracing, and even less its water and airtightness.

Moreover, cardboard is known and used for its thermal insulation properties. Publication US 1,914,207 describes a thermal insulation paned based on superimposed corrugated cardboard sheets, oriented in a same direction so that their flutes are opposite, while the sheets can be glued together or not. For this reason, the thermal insulation paned is covered with a cardboard envelope that can be hermetically tight and impermeable, without specifying by which means. The implementation of such panel is not described.

Description of the invention:

The present invention aims to overcome these disadvantages by offering a cardboard-based construction module for the building sector that combines a plurality of properties allowing offering a new cost-effective and environmentally friendly constructive solution. This module is at the same time bearing and thus structural, thermally and acoustically insulating, earthquake-safe, aesthetic, impermeable to air and water, fire retarding and anti-termite. It is moreover recyclable and can be made from recycled paper and cardboard. Its density allows processing it very easily and cut like wood by sawing. Its mechanical rigidity provides the bracing indispensable for the global stability when constructing a building.

To this purpose, the invention relates to a construction module of the kind described in the preamble, characterized in that each cardboard sheet is a triple wall corrugated cardboard sheet made of a central layer and two external layers arranged on either side of the central layer, and in that said corrugated cardboard layers making up said cardboard sheets have flutes with different sizes.

The superimposed cardboard sheets forming said cardboard block can be oriented in a same direction, so that their flutes are parallel to each other and to width l of said module.

The covering envelope can be chosen in the group including a laminated cardboard sheet, an extruded sheet out of synthetic or composite material such as a sheet out of alveolar polypropylene.

According to the embodiment variants, the construction module can comprise at least two cardboard blocks, of which one with a different size. If it comprises two cardboard blocks, they form a T-shaped construction module.

It can also comprise three cardboard blocks, the central block having a size smaller than the external blocks, forming an H-shaped construction module provided with two grooves in its thickness.

It can moreover comprise three cardboard blocks having the same size, the central block being offset with respect to the external blocks, forming a construction module provided with a tongue and a groove in its thickness.

In a preferred embodiment, the construction module comprises on at least one of its sides a covering sheet having width and height dimensions larger than width l and height h of said construction module forming protruding edges, said covering sheet having the same nature as said covering envelope.

To this purpose, the invention also relates to a construction method implementing said construction module, including the laying and anchoring of posts, profiles and/or beams to each other to build a metallic, wooden and/or concrete frame, characterized in that it comprises the following steps:

- use of a plurality of construction modules as defined above, and
- pressing-in of every construction module between two adjacent posts, profiles and/or beams to form a bracing, absorb the loads and stabilize said construction.

One can use construction modules whose cardboard sheets are mostly oriented in a same direction so that the flutes of the corrugated cardboard are oriented perpendicularly to said posts, profiles and/or beams.

To build a wall, one advantageously lays horizontal base rails and one anchors said vertical posts by fitting them in notches provided in the base rails.

One can easily insert between two adjacent posts and two consecutive construction modules a frame having the same width as said construction modules.

One advantageously uses construction modules provided with a protruding covering sheet so that it covers the external side of said wall and one fastens the edges of said covering sheet on the posts of the frame to form a rain protection and/or achieve airtightness.

One can add on the internal side of said wall an internal lining made of construction modules of lesser thickness.

To form a floor, one can lay stair-shaped profiles and one presses construction modules between said profiles to make them rest on the horizontal surfaces of said profiles

To form a floor and/or a roof, one can lay beams with stops and one presses construction modules between said beams to make them rest on said stops of said beams.

One can add on the internal side of said floor an acoustic lining made of construction modules of lesser thickness and arranged perpendicularly to said profiles or beams

One advantageously uses construction modules provided with a protruding covering sheet so that it covers the external side of said roof and one fastens the edges of said covering sheet on the beams of the roof to form a rain protection and/or achieve airtightness.

Brief description of the drawings:

The present invention and its advantages will be better revealed in the following description of several embodiments given as non limiting examples, in reference to the drawings in appendix, in which:

- figure 1 is a perspective view of a construction module according to a first embodiment,
- figure 2 is a perspective view of a construction module according to a second embodiment,
- figure 3 is a perspective view of a construction module according to a third embodiment,
- figure 4 is a perspective view of a construction module according to a fourth embodiment,
- figure 5 is a top view of an open covering envelope before folding it around a cardboard block to seal a construction module,
- figure 6 is an enlarged partial view of the edge of a cardboard sheet used to manufacture the construction module,
- figure 7 is a partial perspective view of several cardboard sheets of figure 6 superimposed to manufacture the construction module,
- figure 8 is a perspective view of the construction module of figure 1 showing the closed covering envelope of figure 5,
- figure 9 is a perspective view of the construction module of figure 8 to which a protruding covering sheet has been added on one if its sides,
- figure 10 is a partial perspective view of a first embodiment of a construction structure in which the construction module according to the invention is mounted,
- figure 11 is a view similar to that of figure 10 of a second embodiment of said construction structure,
- figure 12 is a partial perspective view of a wall built from the construction structure of figure 10 and the construction modules of figure 9,
- figure 13 is a perspective view of a wall built with the construction modules of figure 9, in which an opening for a window is arranged,
- figure 14 is a cross-sectional view of a first embodiment of a floor built using the construction module of figure 4,

- figure 15 is a partial perspective view of a second embodiment of a floor built using the construction modules of figure 8,
- figure 16 is a view similar to that of figure 15 of an embodiment variant of said floor,
- figure 17 is a partial perspective view of a roof framework, and
- figure 18 is a transversal cross-sectional view of the roof of figure 17 built using the construction modules of figure 9.

Illustrations of the invention and various ways of realizing it:

In the continuation of the description, it will be assumed that the word "top" corresponds to the upper side of the perspective drawings 1, 2, 3, 4, 10, 11, 12, 13.

Figures 1, 2, 3 and 4 show four embodiment variants of a construction module 1a, 1b, 1c, 1d comprising at least a height h, a width I and a cross-section s:

- figure 1 illustrates a construction module 1a in the form of a rectangular parallelepiped produced from a cardboard block having the same shape and intended for the building of a wall, a floor, a roof, this construction module 1a is the most simple and the most versatile,
- figure 2 illustrates a H-shaped construction module 1b made from three superimposed cardboard blocks, with a height of the central cardboard block lower than the height of the side cardboard blocks to form two grooves 2 placed opposite in the thickness of module 1b, this module being intended for building a wall,
- figure 3 illustrates a construction module 1c made from three superimposed cardboard blocks having substantially equal heights, the central cardboard block being offset with respect to the side cardboard blocks to form a groove 2 placed in the thickness of module 1c on one side and a rib or tongue 3 placed in the thickness of module 1c on the opposite side, this module being intended for building a wall,

- figure 4 illustrates a T-shaped construction module 1d made from two superimposed cardboard blocks having different widths, the upper cardboard block being wider than the lower cardboard block to form a shoulder 5 on either side of the upper side of module 1d intended for building a floor.

Figures 5 to 9 show how construction module 1a of figure 1 is manufactured. This extends to all other modules 1b-1d. Construction module 1a is made of a core 4 or block comprising a plurality of rectangular, preferably corrugated cardboard sheets 7, forming flutes parallel to each other, covered by a tight covering envelope 6. The flutes can be sinusoidal, trapezoidal or have any other compatible shape. The cardboard sheet 7 used is represented in detail in figure 6 and comprises an uneven number of corrugated cardboard layers such as for example a triple wall corrugated cardboard sheet made of a central layer 71 and two external layers 72 arranged on either side of central layer 71. The uneven number of corrugated cardboard layers 71, 72 allows obtaining dimensionally stable cardboard sheets 7, without internal stress, which remain flat and do not tend to "curl", that is to say to curve in one direction or in the other. In fact, the two external layers 72 exert on both sides of central layer 71 efforts that oppose each other and tend to ensure the flatness of cardboard sheet 7. These cardboard sheets 7 are therefore easier to process and also guarantee the parallelepipedic geometry of the produced core 4. The size of the flutes of cardboard sheets 7 can vary according to the thermal and/or acoustic properties desired for construction module 1a. In the represented example, which is not limiting, the size of the flutes of central layer 71 is larger than that of the flutes of external layers 72. This arrangement further improves the acoustic properties of construction module 1a. The cardboard sheets 7 making up the core 4 or the block of construction module 1a can be identical or not, according to the desired performances.

Core 4 of construction module 1 is then formed by superimposing several cardboard sheets 7, as illustrated in figure 7, the sheets being glued together by any suitable glue type, such as, as a non limiting example, a cellulose-based white glue or any other

similar and/or compatible glue. In the example represented in figure 7, which is not limiting, cardboard sheets 7 are positioned with respect to each other with a same orientation, so that the flutes are parallel to each other and perpendicular to the height of construction module 1a. Core 4 thus formed is compact, rigid and withstands the compression and bending efforts. For example, it withstands a 3-ton load. This configuration allows absorbing the stability efforts in the walls, the floor and the roof of a construction, and it thus improves the bracing effect. One could however provide a different sheet orientation, so that the flutes are perpendicular.

Once core 4 is manufactured, it is wrapped in a covering envelope 6 represented flat and open in figure 5. This covering envelope 6 must protect cardboard core 4 from humidity, air, fire, parasites, etc. It must be recyclable and able to receive a finishing coat such as a paint, a rendering or the like. It must be made of a sheet that can be cut, folded and glued around core 4 to make a compact and tight construction module 1a. It must have a fire performance of the M2, M1 or even M0 type. This covering envelope 6 can be made of a cardboard sheet laminated with a polyethylene film, a sheet out of any other tight or sealable material, an extruded sheet out of synthetic or composite material, such as for example a sheet out of alveolar polypropylene or the Aquilux® type or the like. The use of an extruded sheet out of synthetic or composite material has the advantage that it is tight both on its surface and in its thickness. It can easily be cut and processed like a cardboard sheet. It allows sealing also the cut sections of a construction module 1a when it must be put in a specific format.

As seen in figure 5, covering envelope 6 is larger than the surface of sides h and l of construction module 1a in order to cover entirely cross-section s of the module and the surface of both sides h and l. Covering envelope 6 has an adapted cut-out to allow covering perfectly corners 41 of core 4. It has flaps 61 on the four sides with tongues 62 between each flap 61 at each corner. Of course, any other cut-out shape fulfilling the same functions can be suitable.

Construction module 1a as manufactured and represented in figure 8 can be completed by adding a covering sheet 8 on the external side of said module, as illustrated in figure 9. This covering sheet 8 can have the same nature as covering envelope 6. It has width and height dimensions larger than width l and height h of construction module 1a to form edges 81 that allow covering posts 21 and base rails 22 of frame 20 of the construction, as described below. This covering sheet 8 advantageously replaces the rain protection necessary outside of a building and covering envelope 6 advantageously replaces the vapor barrier necessary inside of a building.

So construction modules 1a thus manufactured form compact and structural modules offering an optimized, comprehensive, simple and rapid to implement building solution. They can be cut in height, in width and/or in thickness to adapt them to the specific dimensions within the framework of a construction. In this case, the sections that have been cut are covered with covering envelope 6 to seal them again and ensure the tightness of the construction module after cutting.

Possibilities for industrial application:

The construction of a wall 10 made with modules 1a as illustrated in figure 9 will now be described. A frame 20 out of wood, concrete and/or metal is placed on the ground, and construction modules 1a are pressed in to ensure the bracing of the construction. This frame 20 is made of posts 21 placed vertically and anchored in a base rail 22 laid horizontally on the ground, on foundations, on a slab and on other structure element. In the examples illustrated in figures 10, 11, 12 and 13, posts 21 have a rectangular cross-section, but they can have a different cross-section. According to the cross-section of posts 21, H-shaped or rectangular, different embodiment variants of construction modules 1a, 1b, 1c are provided in reference to figures 1, 2 and 3. Posts 21 are anchored in U-shaped notches 23 specially arranged in base rail 22 to determine an axis distance between posts 21 in function of width l of construction modules 1a and to ensure the observance of this axis distance without shifting of posts 21 when

pressing in construction modules 1a between posts 21. Posts 21 are fixed in base rail 22 by screwing, nailing, bolt fastening, or any equivalent means, without using metal squares, which could tear covering envelope 6. This fitting assembly method allows frame 20 to absorb the stability efforts of several tons of the construction without subjecting the fastening elements, screws, nails, bolts, etc. to shearing efforts. In figure 10, notches 23 are machined in base rail 22 while, in figure 11, notches 23 are obtained by assembling a lower continuous base rail 22a and an upper discontinuous base rail 22b which forms with base rail 22a said notches 23. Base rails 22a and 22b can be assembled by any suitable means, such as screwing, nailing, bolt assembly and/or gluing.

As mentioned above, construction modules 1a are forcibly inserted between posts 21 to prevent any assembly gap and thus guarantee the mechanical rigidity of the construction and consequently its bracing. For a solid wall, construction modules 1a are entire, their height h corresponds to the height of posts 21, as illustrated in figure 12. Edges 81 of covering sheet 8 of construction modules 1a of figure 9 allow covering the external side of posts 21 and of base rail 22 of frame 20, thus ensuring an air and watertightness of the construction. The external face of the construction can be directly coated with a finishing coat chosen according to the aesthetics desired for the construction, such as a paint, a rendering, etc. It can also be covered with a cladding. This wall 10 can comprise or not an internal lining 24 made of construction modules 1a of lesser thickness fixed on frame 20 by screwing, nailing or the like, to improve the thermal insulation of the construction and prevent thermal bridges at posts 21. In this case, construction modules 1a forming internal lining 24 can be laid perpendicular to construction modules 1a forcibly inserted in frame 20.

Depending on the type of wall or partition wall to be built, construction modules 1a can be separated in height by horizontal rails out of metal, concrete and/or wood (not represented) extending between posts 21. This allows creating easily openings such as windows, doors, bay windows or the like, but also higher walls. In wall 10 of figure

13, a frame 25 having the same width as construction modules 1a is placed in width between two posts 21 and in height between two construction modules 1a, the same way as horizontal base rails.

Depending on the cross-section of posts 21 of frame 20, which can be rectangular or H-shaped, different embodiments are provided for the construction modules. When posts 21 are rectangular, one can use construction modules 1a of figure 9 with covering sheet 8 on the side of module 1a intended for being oriented towards the outside of wall 10. Construction module 1a with its covering sheet 8 is pressed in between two posts 21 until edges 81 touch posts 21. The advantage of such edges 81 is that they cover posts 21 from the outside and thus protect them from atmospheric influence. It is sufficient to place an adhesive tape (not represented) between two edges 81 of two contiguous modules 1a.

If posts 21 are H-shaped (not represented), construction modules 1b, 1c will be inserted vertically between the legs of the H. In this case, construction modules 1b, 1c used will preferably be those illustrated in figures 2 and 3. If construction modules 1b used are those of figure 2, horizontal base rails will be dimensioned in order to fit in the two grooves 2 of each contiguous module. If construction modules 1c used are those of figure 3, the rib or tongue 3 of a lower module 1c fits in groove 2 of upper module 1c.

Construction module 1a-1d according to the invention also allows building simply and quickly floors and roofs, as illustrated in figures 14 to 18, which have the advantage of combining mechanical, thermal and acoustic properties.

To build floor 12 as shown in figure 14, one lays metal profiles 26 with n horizontal sections forming n bearing areas, on bearing beams or girders (not represented). Then one presses T-shaped construction modules 1d of figure 4 between profiles 26 and one fixes them by nailing, bolt fastening, riveting or the like, the block with the largest dimension forming shoulder 5 that rests on the intermediate bearing areas of profiles

26. It is also possible to use only construction modules 1a of figure 1 having different dimensions and superimposed between profiles 26. It is furthermore possible to add an acoustic lining 28 as in figure 16. In the represented example, profiles 26 have a stair shape allowing spans between support points that can reach for example 8 to 9 meters. To build floors 13 and 14 of figures 15 and 16, one lays beams 27 made of wood, concrete or metal on bearing beams or girders (not represented). One then presses construction modules 1a of figure 1 between beams 27 so that they rest on stops 27a of beams 27. In all cases, depending on the desired finish of the floor and on the required thermal and acoustic characteristics, one can either directly lay a parquet floor 29 or any other flooring, or pour previously a liquid screed and/or add an acoustic lining 28 formed by construction modules 1a of figure 1 of lesser thickness. In this case, one can lay construction modules 1a of the acoustic lining perpendicular to beams 27 to cross construction modules 1a and acoustically insulate the floor structure formed by beams 27. The combination of construction modules 1a, 1d according to the invention and of their press-in fitting between beams, profiles, hourdis, etc. allows ensuring a high mechanical stability of the floors, absorbing the compression load of the floor and withstanding operating loads of at least 250 kg/m^2 for example.

To build a roof 15 as represented in figures 17 and 18, one can use the same beams 27 as those of floors 13 and 14 to form a ridge beam and bearing rafters that advantageously replace the truss frame braces, main beams and purlins, thus simplifying the construction of the woodwork. One then presses in construction modules 1a according to figure 9 provided with their covering sheet 8 that ensures simultaneously the air and watertightness of the roof and replaces the rain protection on the external side of the construction. The covering of roof 15 can be achieved with all suitable finishes such as tiles, slates, etc. The use of construction modules 1a according to the invention in the context of the building of a roof allows reducing the required insulant thickness, therefore having a larger volume under the roof, while achieving high mechanical stability and a good roof loads distribution.

This description shows clearly that the invention allows reaching the goals defined, and that it has brought about a new simple, quick, earthquake-safe, environmentally friendly and cost-effective constructive principle.

The present invention is not restricted to the examples of embodiment described, but extends to any modification and variant which is obvious to a person skilled in the art while remaining within the scope of the protection defined in the attached claims.

P A T E N T K R A V

1. Konstruktionsmodul (1a, 1b, 1c, 1d) af pap, navnlig til fremstilling af en bygning, omfattende mindst én parallelepipedisk blok af pap, som definerer mindst en højde h, en bredde 1 og et tværsnit s af modulet, hvilken blok af pap består af en flerhed af rektangulære og overlejrede ark af bølgepap (7), hvilke ark af bølgepap (7) omfatter riller, hvor de overlejrede ark af pap (7) er limet sammen for at danne en kompakt, rigid, bærende og selvbærende blok af pap, og hvor blokken af pap i sin helhed er indhyllet på en tæt måde i en indhyllende beklædning (6) for at udgøre et konstruktionsmodul (1a, 1b, 1c, 1d), der er tæt for luft og vand, k e n d e t e g n e t ved, at hvert ark af pap (7), som udgør blokken af pap, er et ark af pap med tredobbelte riller bestående af et centralt lag (71) og to udvendige lag (72) anbragt på hver sin side af det centrale lag (71), og ved, at lagene (71, 72) af bølgepap, der udgør arkene af pap (7), omfatter riller af forskellig størrelse.

2. Konstruktionsmodul ifølge krav 1, k e n d e t e g n e t ved, at de overlejrede ark af pap (7), som danner blokken af pap, er orienteret i en samme retning på en sådan måde, at deres riller er parallelle med hinanden og med bredden 1 af modulet.

3. Konstruktionsmodul ifølge ét af de foregående krav, k e n d e t e g n e t ved, at den indhyllende beklædning (6) er valgt fra gruppen omfattende et ark af filmovertrukket pap, et ark ekstruderet i syntetisk materiale eller komposit, så som et ark af alveolær polypropylen.

4. Konstruktionsmodul ifølge ét af de foregående krav, k e n d e t e g n e t ved, at det omfatter mindst to blokke af pap, af hvilke en med en forskellig størrelse.

5. Konstruktionsmodul ifølge krav 4, k e n d e t e g n e t ved, at det omfatter to blokke af pap, som danner et konstruktionsmodul (1d) med form som et T.

6. Konstruktionsmodul ifølge krav 4, k e n d e t e g n e t ved, at det omfatter tre blokke af pap, hvor den midterste blok er af mindre størrelse end de udvendige blokke, som danner et konstruktionsmodul (1b) med form som et H, som i sin tykkelse er forsynet med to noter (2).

7. Konstruktionsmodul ifølge ét af de foregående krav 1 til 3, k e n d e t e g n e t ved, at det omfatter tre blokke af pap af samme størrelse, hvor den midterste blok er forskudt i forhold til de udvendige blokke, som danner et konstruktionsmodul (1c), der i sin tykkelse er tilvejebragt med en tunge (3) og en not (2).

8. Konstruktionsmodul ifølge ét af de foregående krav, k e n d e t e g n e t ved, at det på mindst én af sine overflader omfatter et dækark (8), som i bredden og i højden har dimensioner, der er større end bredden 1 og højden h af konstruktionsmodulet (1a), og som danner fremskudte kanter (81), hvor dækarket (8) er af samme natur som den indhyllende beklædning (6).

9. Konstruktionsfremgangsmåde, navnlig til at konstruere en bygning, som benytter et konstruktionsmodul, omfattende udlægning og forankring af stolper (21), profiler (26) og/eller dragere (27) til hinanden for at danne et metal-, træ- og/eller betonskelet (20),

k e n d e t e g n e t ved, at den omfatter de følgende trin:

- at anvende en flerhed af konstruktionsmoduler (1a, 1b, 1c, 1d) ifølge ét af de foregående krav, og
- at presse hvert konstruktionsmodul (1a, 1b, 1c, 1d) ind mellem to til hinanden grænsende stolper (21), profiler (26) og/eller dragere (27) for at danne en vindafstivning, sikre en optagelse af belastninger og stabilisere konstruktionen.

10. Fremgangsmåde ifølge krav 9, k e n d e t e g n e t ved, at man anvender konstruktionsmoduler (1a, 1b, 1c, 1d), hvor arkene af pap (7) hovedsageligt er orienteret i en samme retning på en sådan måde, at rillerne af bølgepappet er orienteret vinkelret på stolperne (21), profilerne (26) og/eller dragerne (27).

11. Fremgangsmåde ifølge krav 9, k e n d e t e g n e t ved, at man for at danne en mur (10, 11) lægger horisontale overliggere (22, 22a, 22b), og ved, at man forankrer de vertikale stolper (21) ved indsænkning i indsnit (23) tilvejebragt i overliggerne (22, 22a, 22b).

12. Fremgangsmåde ifølge krav 11, k e n d e t e g n e t ved, at man mellem to til hinanden grænsende stolper (21) og to på hinanden følgende konstruktionsmoduler (1a, 1b, 1c, 1d) indsætter en ramme (25) af samme bredde som konstruktionsmodulerne.

13. Fremgangsmåde ifølge krav 11, k e n d e t e g n e t ved, at man anvender konstruktionsmoduler (1a) tilvejebragt med et fremskudt dækark (8) for at det dækker den udvendige side af muren (10), og at man fastgør kanterne (81) af dækarket (8) til stolperne (21) af skelettet (20) for at danne en regnbeskyttelse og/eller en lufttæthed.

14. Fremgangsmåde ifølge krav 11, k e n d e t e g n e t ved, at man til den indvendige side af muren (20) føjer en indvendig beklædning (24) dannet af konstruktionsmoduler (1a) af mindre tykkelse.

15. Fremgangsmåde ifølge krav 9, k e n d e t e g n e t ved, at man for at danne et gulv (12) lægger profiler (26) i trappeform, og man presser konstruktionsmoduler (1a, 1d) ind mellem profilerne (26) for at de kommer til anlæg mod de horisontale bæreflader af profilerne (26).

16. Fremgangsmåde ifølge krav 9, k e n d e t e g n e t ved, at for at danne et gulv (13, 14) og/eller en tagkonstruktion (15) udlægger man dragere (27) omfattende stop (27a), og man presser konstruktionsmoduler (1a) ind mellem dragerne (27) for at de kommer til anlæg mod stoppene (27a) af dragerne (27).

17. Fremgangsmåde ifølge ét af kravene 15 eller 16, k e n d e t e g n e t ved, at man til den indvendige side af gulvet (12, 13, 14) føjer en akustisk beklædning (28) dannet af konstruktionsmoduler (1a) af mindre tykkelse og anbragt vinkelret på profilerne (26) eller dragerne (27).

18. Fremgangsmåde ifølge krav 16, k e n d e t e g n e t ved, at man anvender konstruktionsmoduler (1a) tilvejebragt med et fremskudt dækark (8) for at det dækker den

udvendige side af tagkonstruktionen (15), og at man fastgør kanterne (81) af dækarket (8) til dragerne (27) af tagkonstruktionen (15) for at danne en regnbeskyttelse og/eller en lufttæthed.

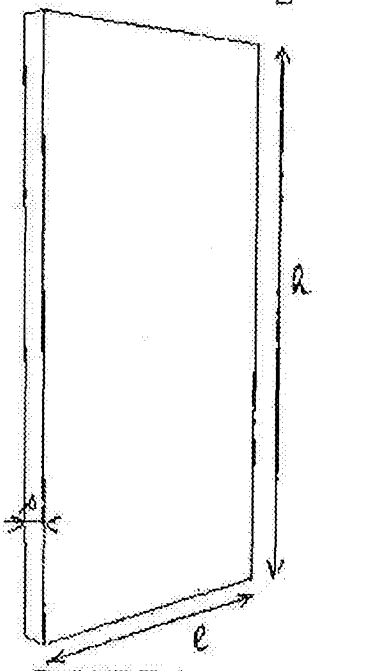

FIGURE 1

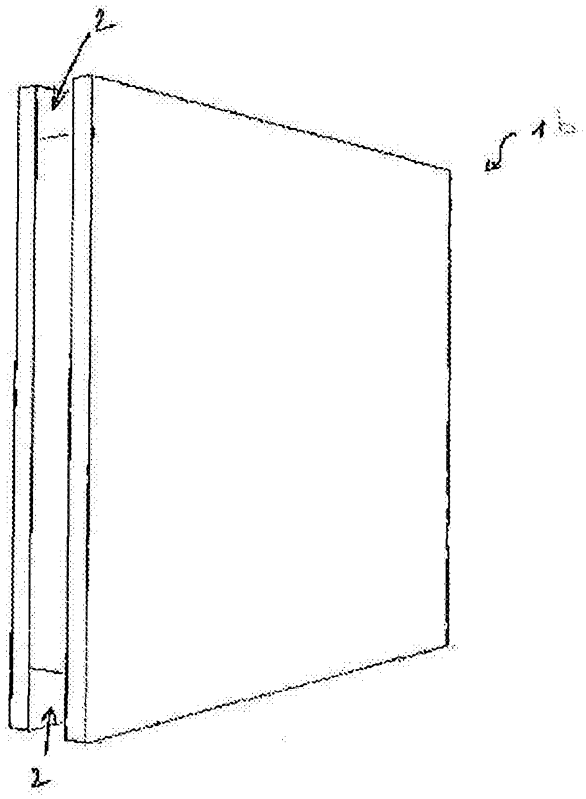

FIGURE 2

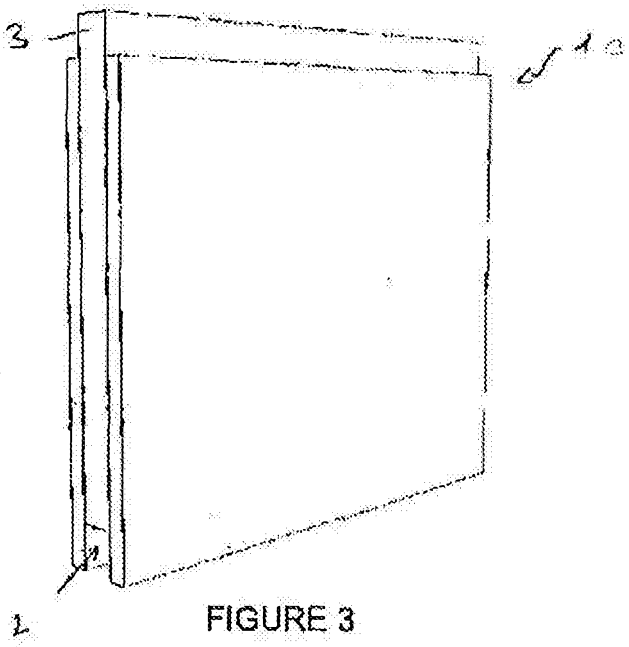

FIGURE 3

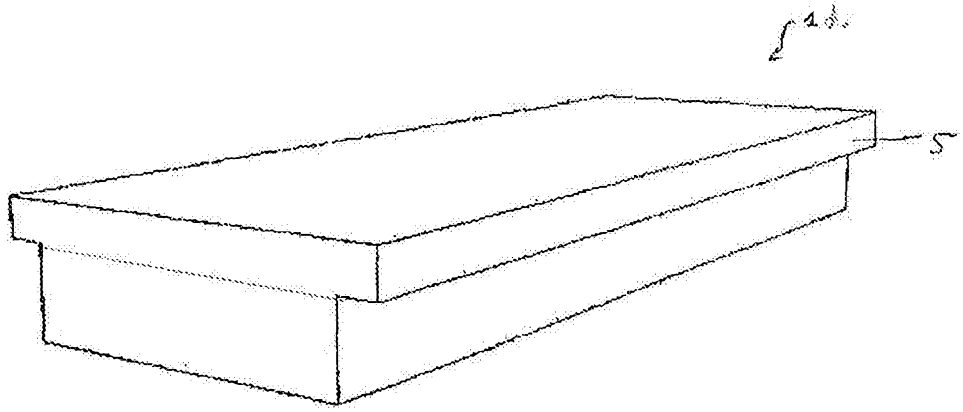

FIGURE 4

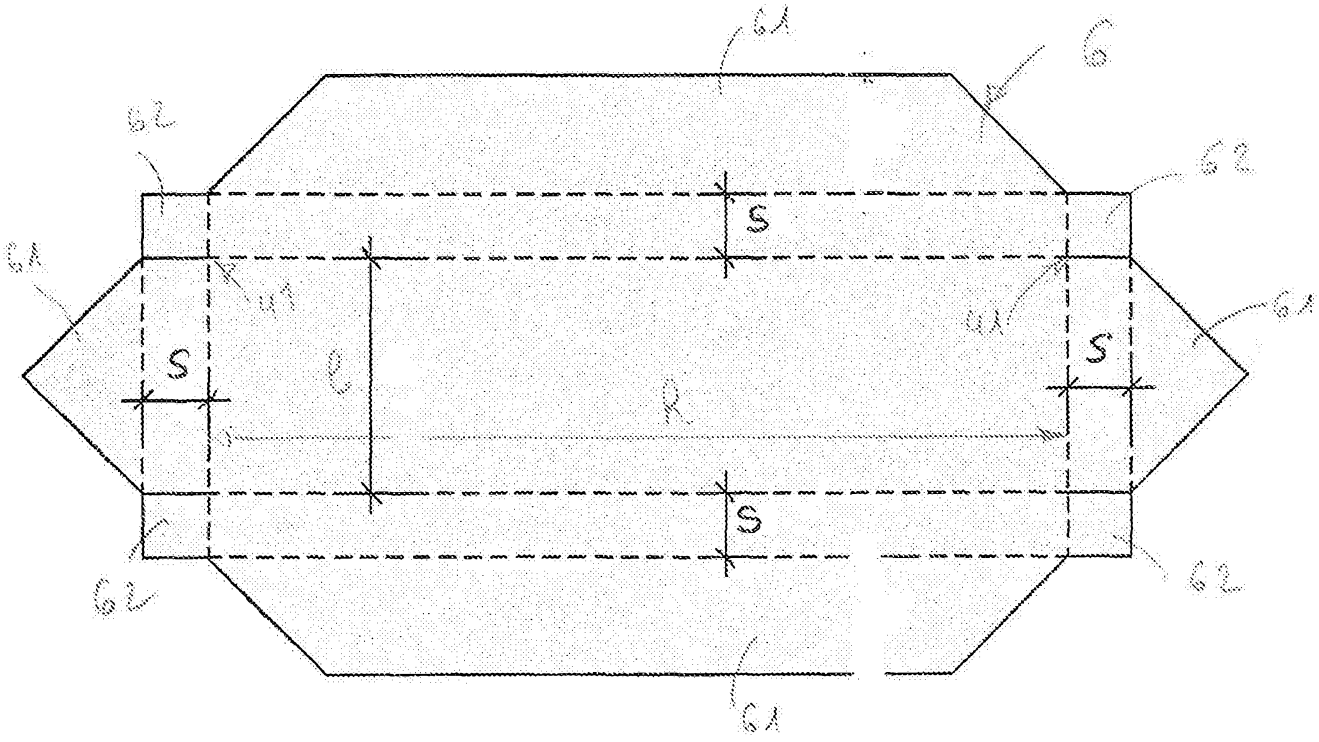

FIG. 5

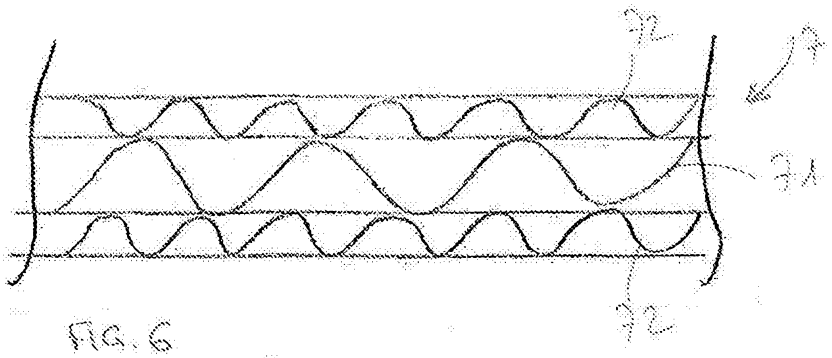

FIG. 6

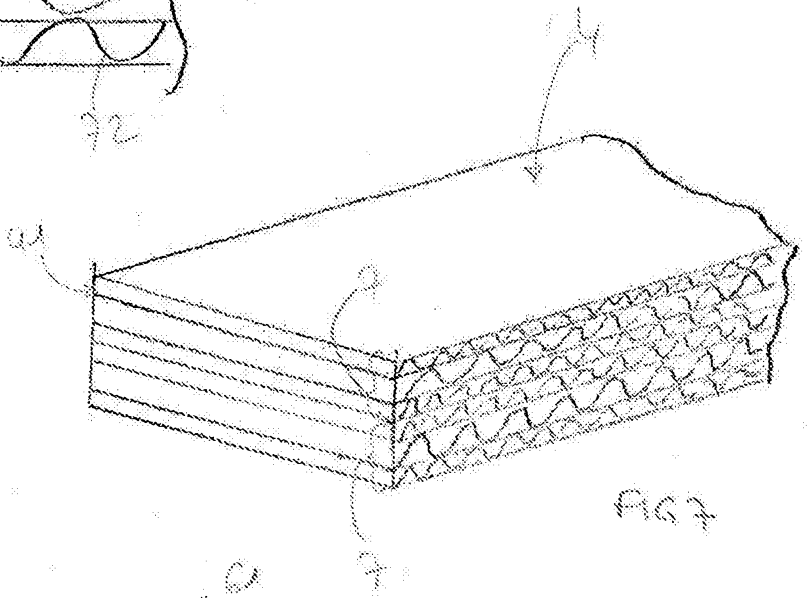

FIG 7

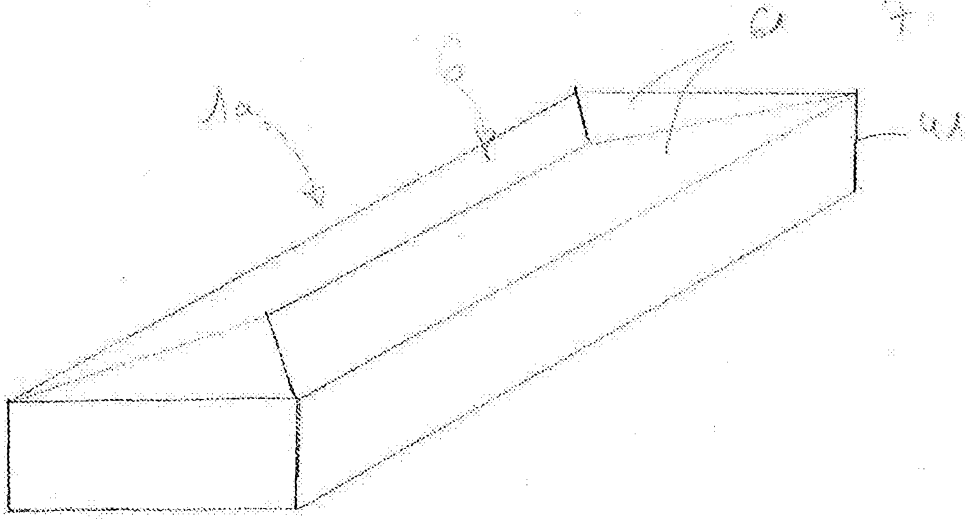

FIG. 8

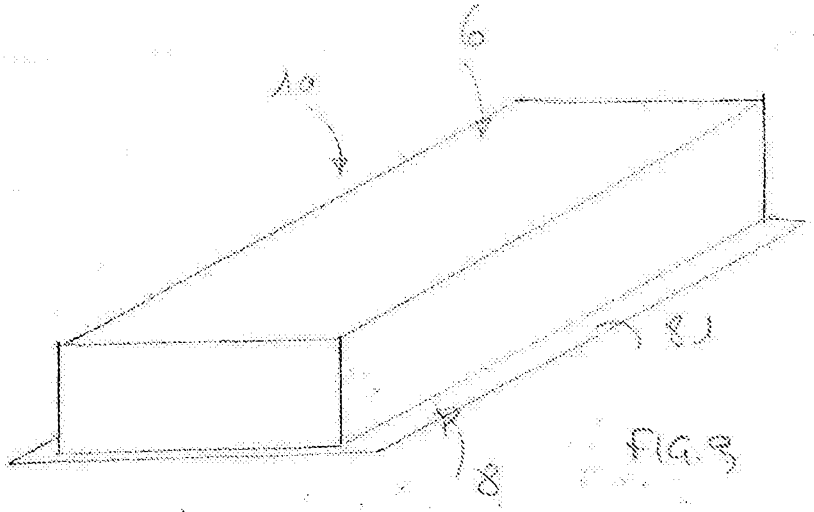

FIG. 9

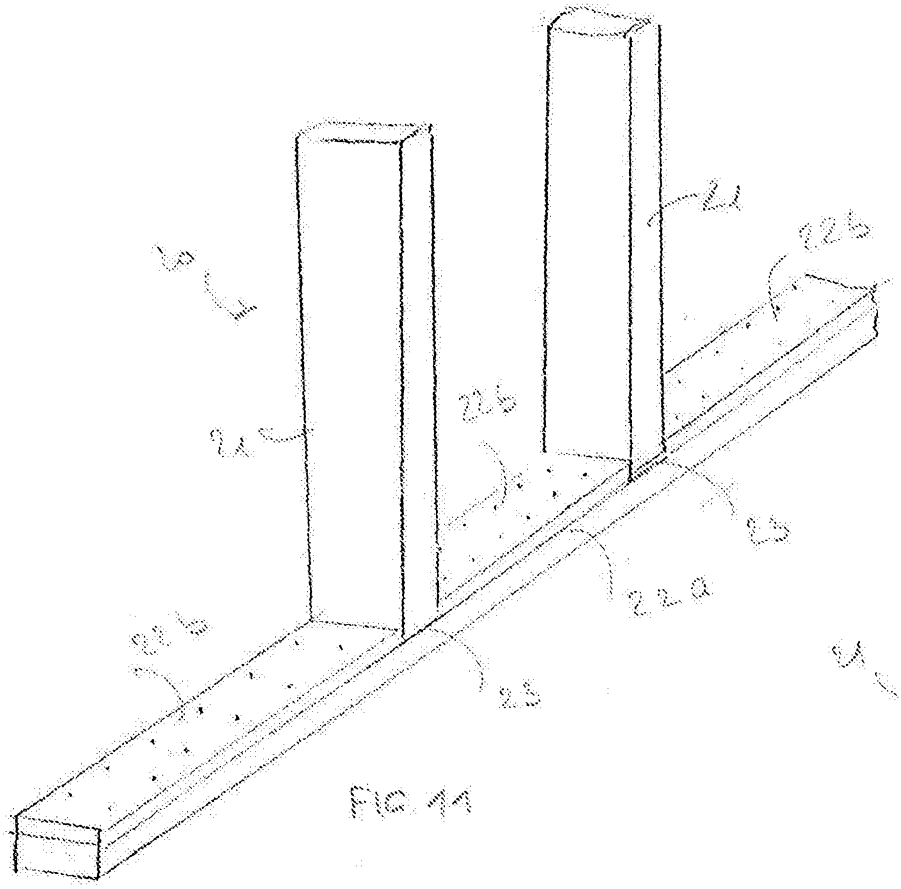

FIG. 11

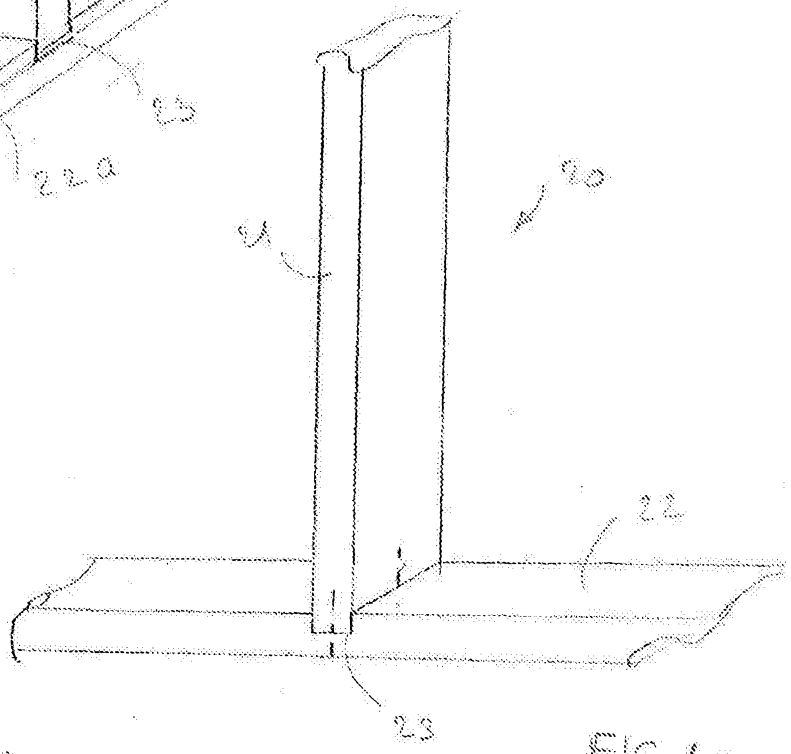

FIG. 10

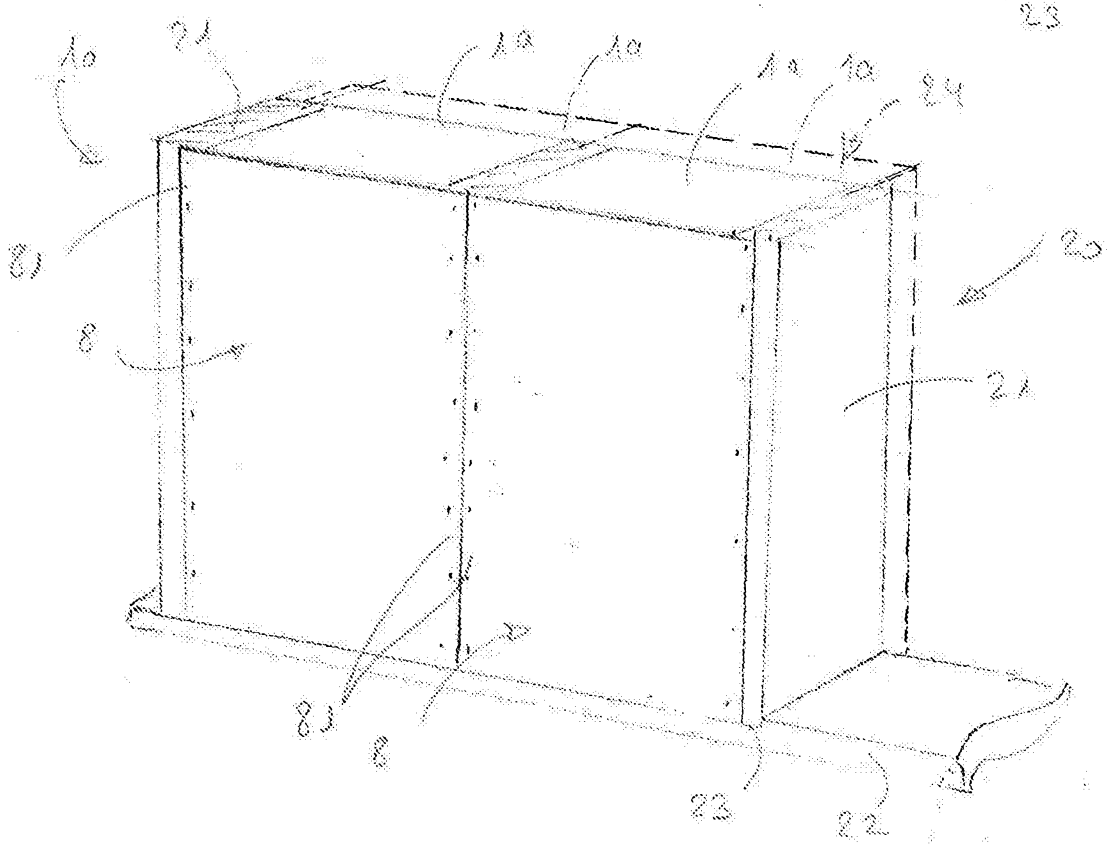

FIG. 12

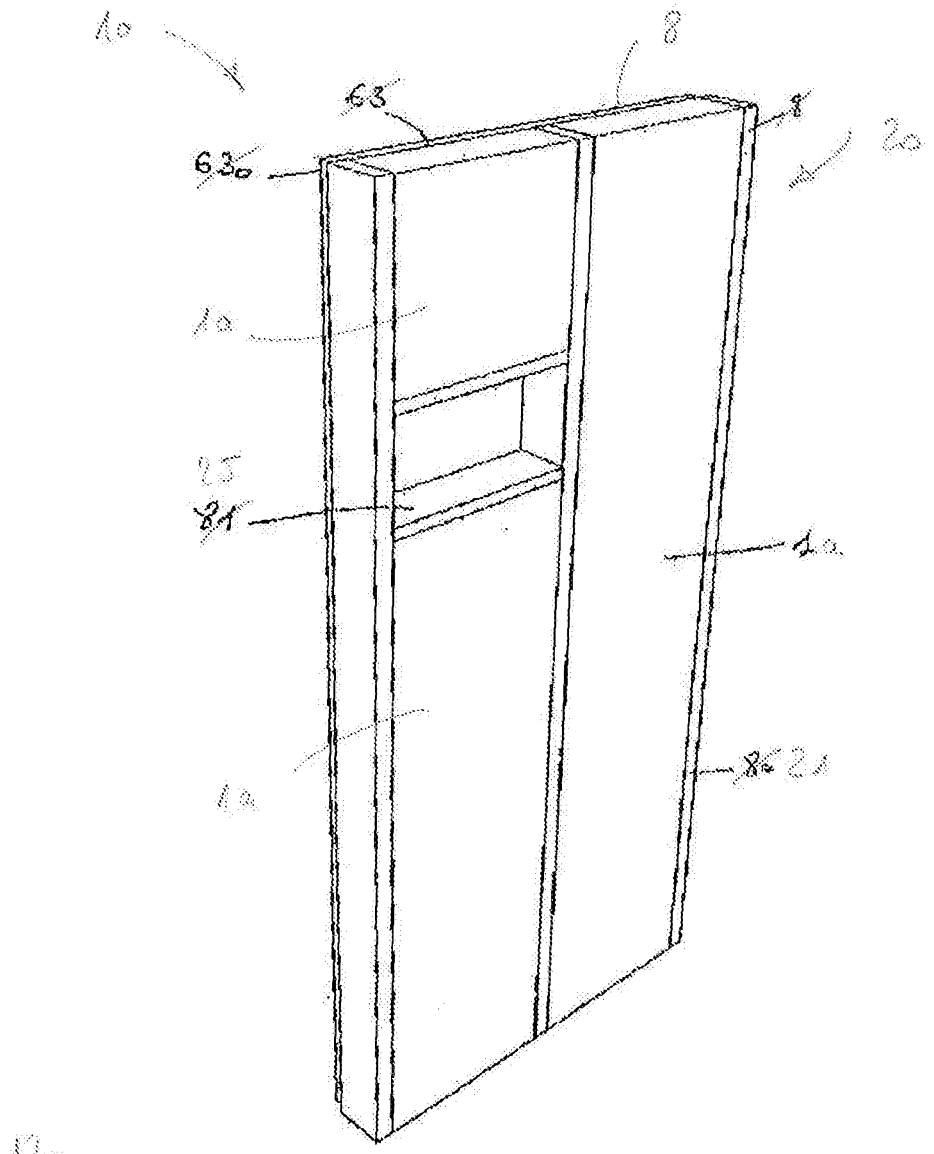

FIGURE 13

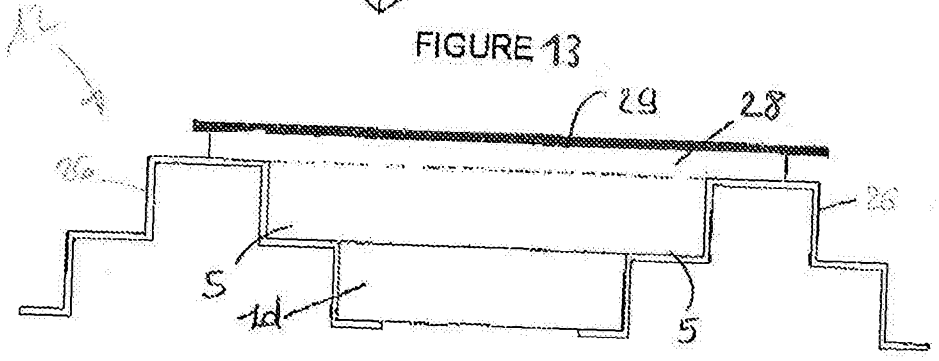

FIGURE 14

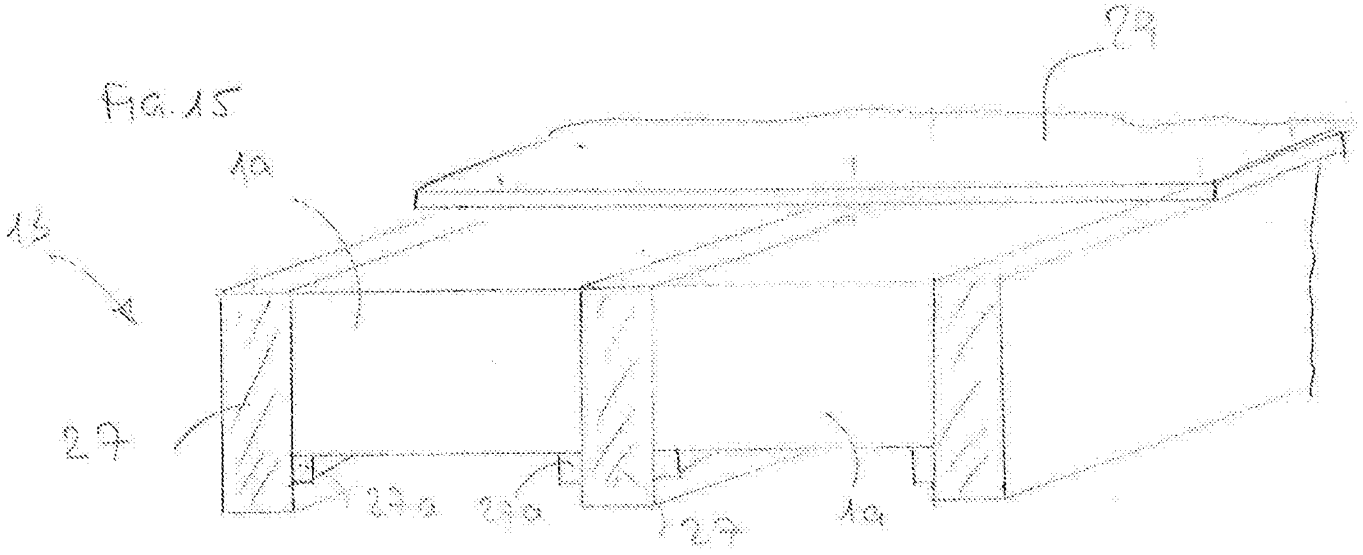

FIG. 15

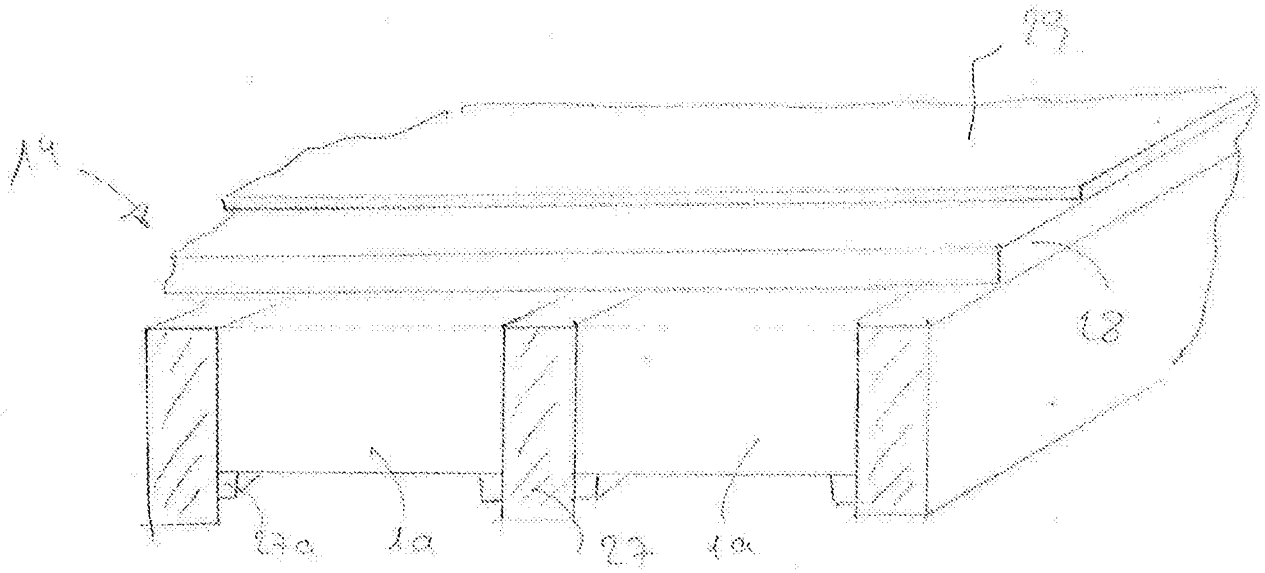

FIG. 16

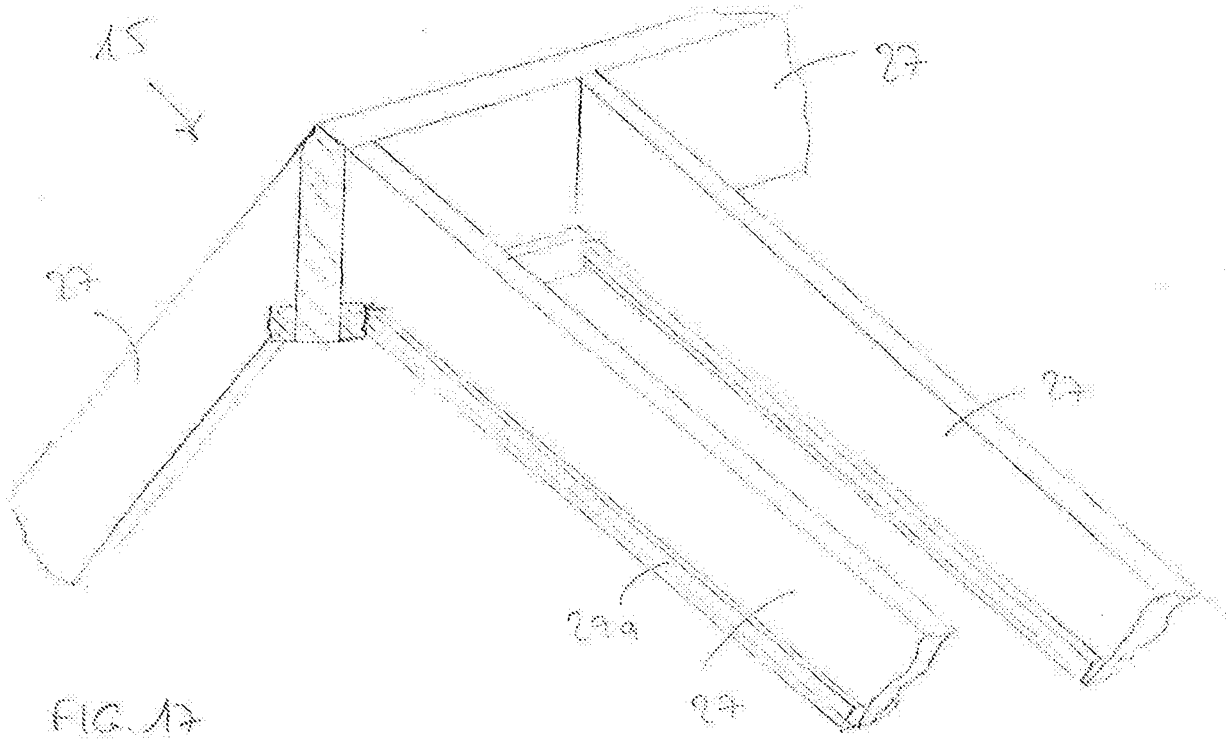

FIG. 17

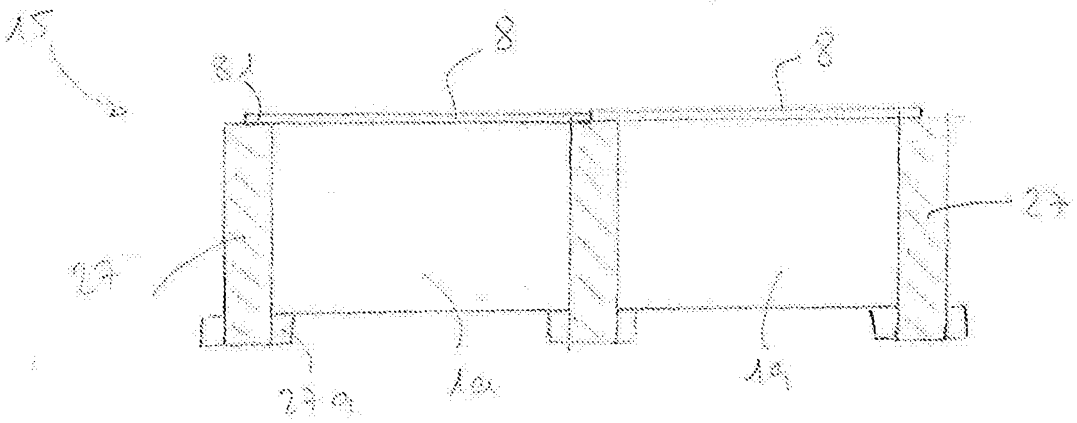

FIG. 18