W. B. WOODRUFF.

RECORDING ANNUNCIATOR.

APPLICATION FILED FEB. 29, 1908.

909,502. Patented Jan. 12, 1909.

4 SHEETS—SHEET 1.

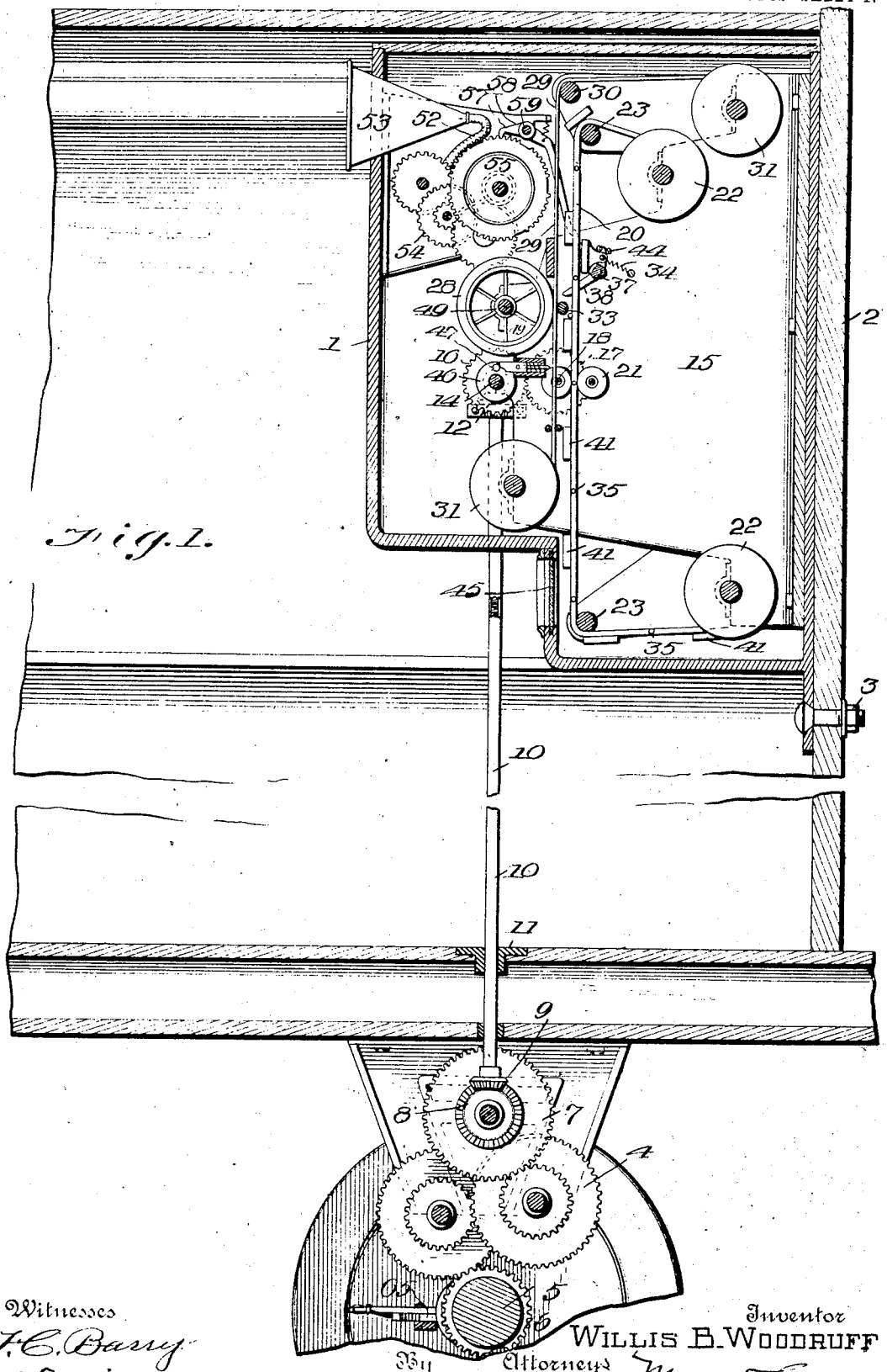

Witnesses

F. C. Barry

C. E. Trevor

Inventor

WILLIS B. WOODRUFF

By Attorneys Munn & Co.

W. B. WOODRUFF.

RECORDING ANNUNCIATOR.

APPLICATION FILED FEB. 29, 1908.

909,502.

Patented Jan. 12, 1909.

4 SHEETS—SHEET 2.

Fig. 2.

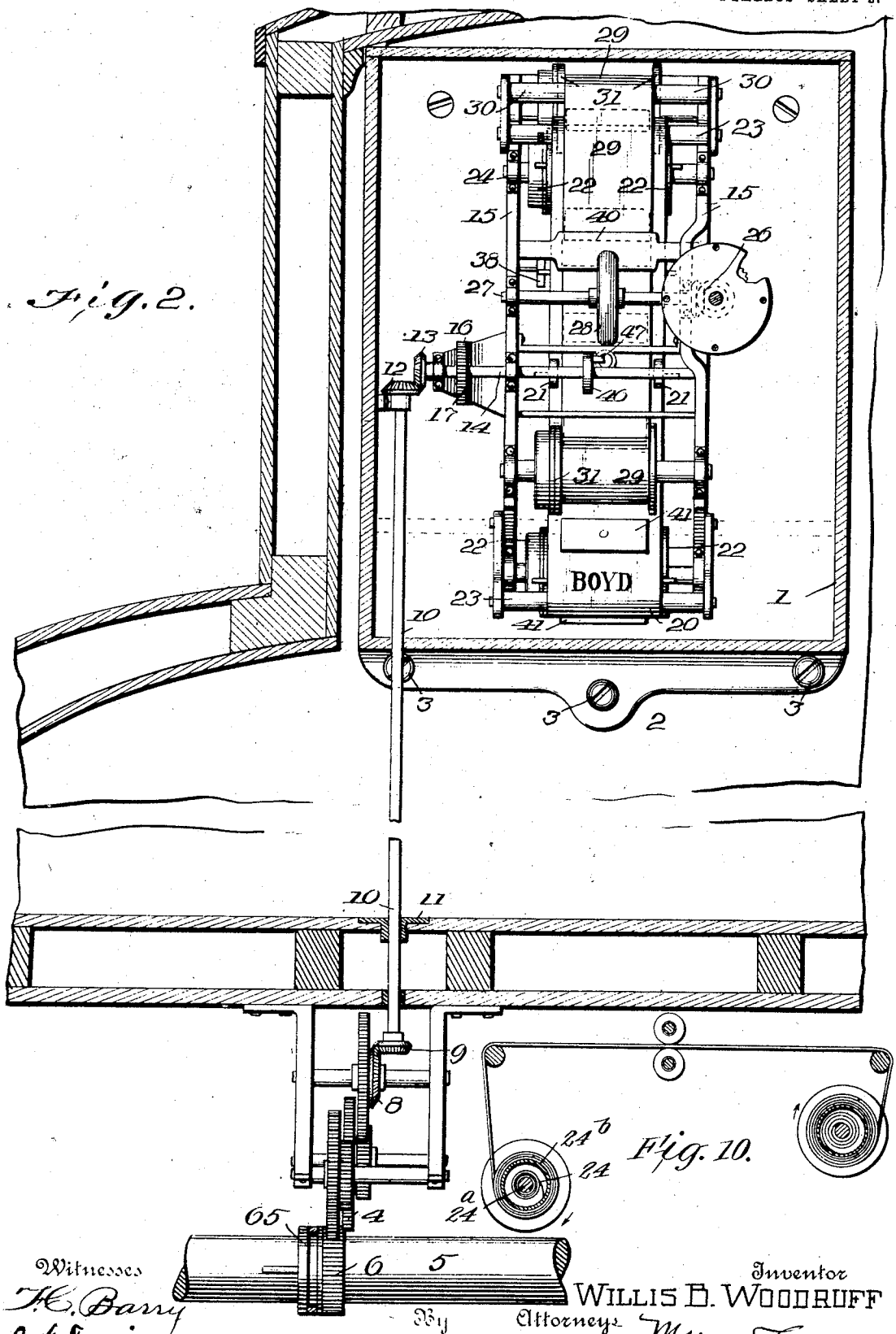

Fig. 10.

Witnesses

H. C. Barry

C. E. Frain

Inventor

WILLIS B. WOODRUFF

By Attorneys Munn & Co.

W. B. WOODRUFF.

RECORDING ANNUNCIATOR.

APPLICATION FILED FEB. 29, 1908.

909,502.

Patented Jan. 12, 1909.

4 SHEETS—SHEET 3.

Fig. 3.

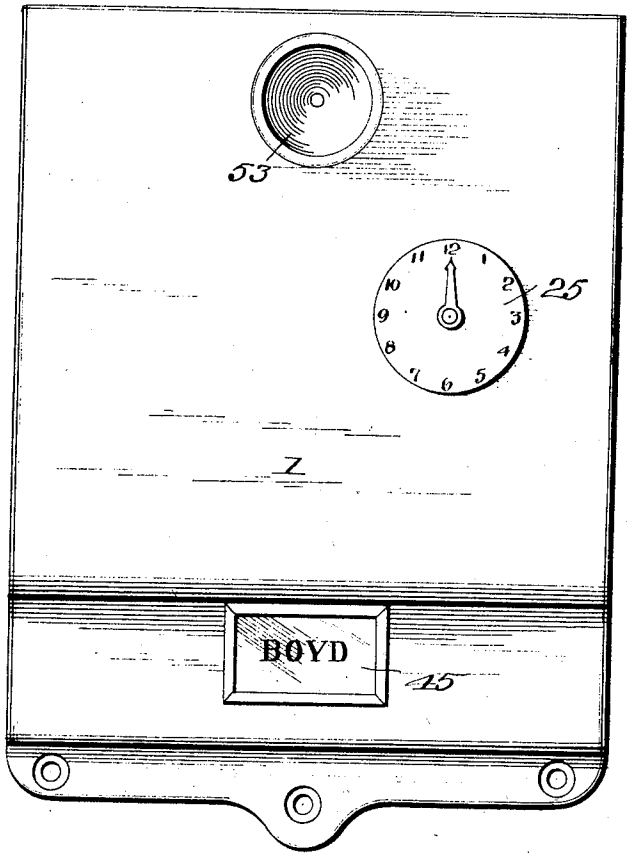

Fig. 5.

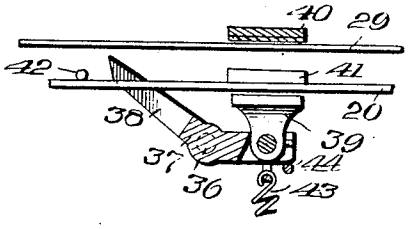

Fig. 6.

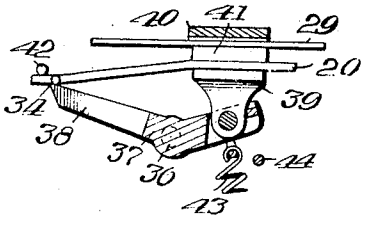

Fig. 4.

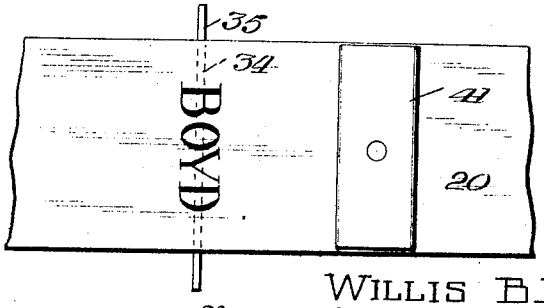

Witnesses
F. C. Barry
C. E. Trainor

Inventor
WILLIS B. WOODRUFF
By Munn & Co.
Attorneys

W. B. WOODRUFF.

RECORDING ANNUNCIATOR.

APPLICATION FILED FEB. 29, 1908.

909,502.

Patented Jan. 12, 1909.

4 SHEETS—SHEET 4.

Fig. 7.

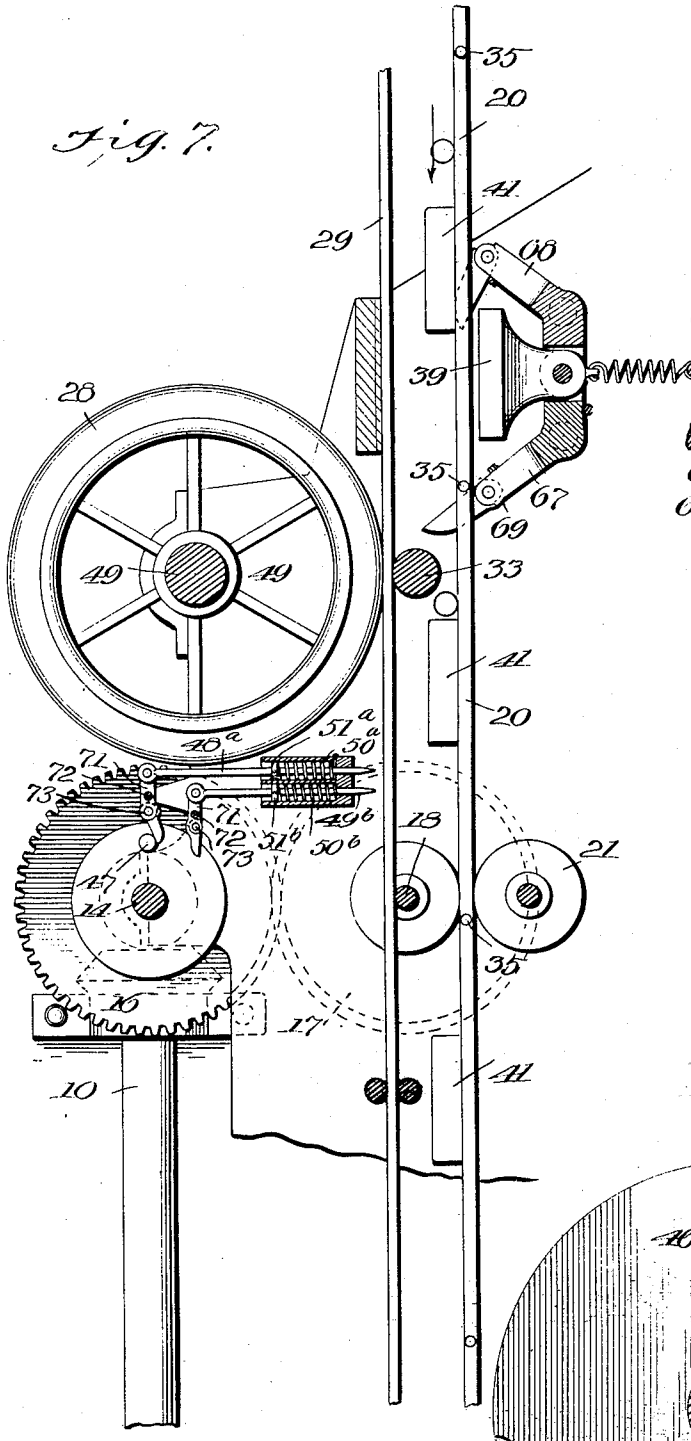

Fig. 9.

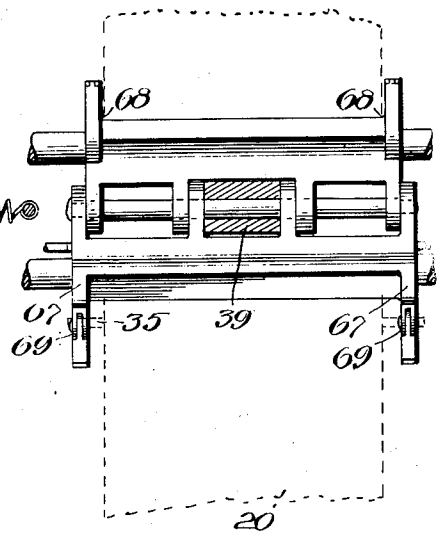

Fig. 8.

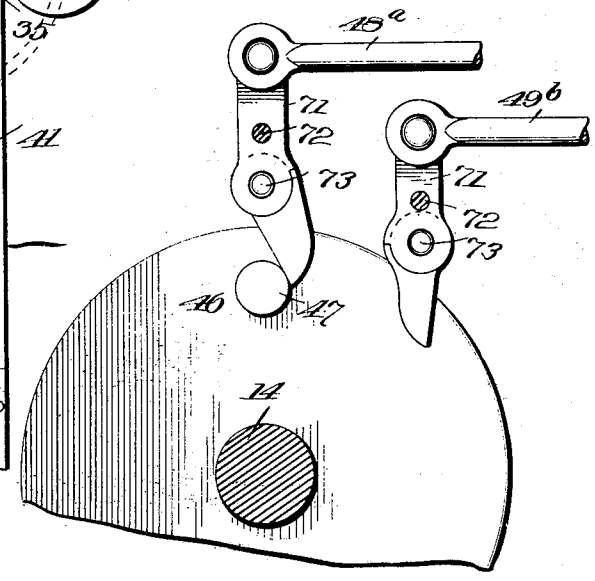

Witnesses

H. C. Barry

C. E. Grainor

Inventor

WILLIS B. WOODRUFF

By Attorneys Munn & Co.

UNITED STATES PATENT OFFICE.

WILLIS BYRON WOODRUFF, OF CADIZ, KENTUCKY.

RECORDING-ANNUNCIATOR.

No. 909,502. Specification of Letters Patent. Patented Jan. 12, 1909.

Application filed February 29, 1908. Serial No. 418,140.

To all whom it may concern:

Be it known that I, WILLIS B. WOODRUFF, a citizen of the United States, and resident of Cadiz, in the county of Trigg and State of Kentucky, have made certain new and useful Improvements in Recording-Annunciators, of which the following is a specification.

My invention is an improvement in recording annunciators, and consists in certain novel constructions and combinations of parts hereinafter described and claimed.

The object of the invention is to provide a recording sheet driven by a clock, and a recording mechanism driven by the car and operating upon the sheet, the recording mechanism being provided with indications corresponding to the data to be recorded on the sheet, and being geared to bring said indications into position for recording, at the time the car reaches the point on the road to which the data pertains.

Referring to the drawings forming a part hereof—Figure 1 is a central longitudinal section through the mechanism. Fig. 2 is a transverse section. Fig. 3 is a front view of the case containing the mechanism. Fig. 4 is a plan view of a portion of the ribbon of the recording mechanism. Fig. 5 is a detail view of the stamping mechanism in one position. Fig. 6 is a similar view of the mechanism in another position. Fig. 7 is a detail side view partly in section of mechanism for properly operating the stamps and the pencil regardless of the direction of movement of the car. Fig. 8 is an enlarged detail of the pencil operating mechanism. Fig. 9 is a plan view of the stamp operating mechanism, and Fig. 10 is a diagrammatic view of the ribbons and the reel.

In the present embodiment of my invention, a casing 1 is provided which is adapted to be secured in the car 2, in any suitable manner, as by bolts 3. A reducing gear 4 is connected with the axle 5 of the car, the axle being provided with a gear wheel 6 for driving the reducing gear, and the outer member 7 of the gear is provided with a bevel wheel 8, meshing with a bevel gear 9 on the lower end of a flexible shaft 10, which is journaled in suitable bearings 11 in the car. The upper end of the flexible shaft extends into the casing 1, and is provided with a bevel gear 12, meshing with a bevel gear 13, on a shaft 14 journaled in brackets 15 connected with the casing. A gear wheel 16 is secured to the shaft 14, and meshes with a gear wheel 17 on a shaft 18, which is provided with a roller 18^a, engaging the upper face of a belt or ribbon 20, to be presently described, a second roller 21 being arranged below the belt or ribbon for cooperating with the roller 18^a. The belt or ribbon 20 has its ends connected with and winding upon reels 22 journaled in the casing, the ribbon passing from the reels over rollers 23, which support it in a straight vertical line as shown in Fig. 1. Springs 24 are connected with the reels 22, for maintaining the ribbon in a state of tension, one end of the spring 24 is connected with the shaft 24^a on which the reel is journaled, and the other end is connected with an annular flange 24^b as shown in Fig. 10 of the drawing.

A clock 25 is supported by the casing, on the front thereof, and a driving connection 26 is provided between the clock and a shaft 27 journaled in the brackets 15 before mentioned. The shaft 27 is provided with a rubber tired wheel 28, which engages the upper face of a second ribbon 29, supported by rollers 30 in front of the ribbon 20, the ends of the ribbon 29 being secured to and winding upon reels 31, journaled in the brackets 15, and tensioned by springs 32. A roller 33 engages the opposite face of the belt from the wheel 28, and coöperates therewith to assist in moving the ribbon.

The ribbon 20 is provided at spaced intervals with transverse wires or rods 34, the ends of the rods protruding from each edge of the ribbon as shown at 35. An elbow lever 37 is journaled as at 36 below the ribbon, and one end of the elbow lever is forked as at 38, the arms of the fork extending on each side of the ribbon 20 in position for engagement by the wires 34, before mentioned. The opposite end of the lever has pivoted thereto a platen 39, which is adapted, when the fork is depressed by the wires 34, to be elevated to force the ribbon 20 toward the ribbon 29. A plate 40 is arranged above the ribbon 29 opposite to the platen 39, before mentioned.

The ribbon 20 is provided at intervals

corresponding to the intervals between the wires 34 with stamps 41 of rubber or other suitable material, provided on their upper faces with data to be recorded on the ribbon 29, and when the elbow lever is moved, as shown in Fig. 6, the stamp 41 is pressed against the ribbon 29 to impress the data on said ribbon. A transverse wire or rod 42 is arranged above the ribbon 29 adjacent to the forked end of the elbow lever, to prevent upward movement of the ribbon 20, when the wires engage the said forked end of the lever. It will be understood that the stamps 41 are arranged on the ribbon 20 in such manner that when the wire 34 engages the forked end of the elbow lever, the stamp corresponding to the said wire, will be in position for engagement by the platen 39. A spring 43 is connected with the elbow lever to return the platen, and a stop 44 is provided for limiting the downward movement of the platen.

The shaft 14 above mentioned, is provided with a disk 46 above the ribbon 29, and projecting laterally from the disk is a pin 47, adapted to engage once during each revolution of the shaft the end of a longitudinally sliding pencil 48, provided with a point 49 for engaging the ribbon 20, and normally held in outward position by a spring 50. The pencil slides in a bushing 51 secured in the casing, and is adapted to perforate or prick the ribbon 29 once during each revolution of the shaft 14.

It will be evident from the description, that the ribbon 29 is moved continuously by the clock mechanism, and the gearing between the clock mechanism and the ribbon moving mechanism, may be arranged to move the ribbon a certain distance per hour. The ribbon 20 on the other hand, moves only when the car moves, and since the speed of the ribbon is so proportioned with respect to the speed of the car as to bring the proper recording mechanism in position to record when the point to which the data on the recording mechanism pertains is reached by the car, a perfect record of the time used between each set of data recorded is secured. Should, for instance, the distance between two stations be such that the car should consume an hour's time between such stations, and the length of ribbon 29 between the records of the two stations be a length corresponding to an hour and a half of time, this will show that the car has consumed an hour and a half of time instead of one hour.

The pencil 48 makes an impression on the ribbon 20 at certain regular intervals, providing the speed of the car is constant, and the distance between the impressions indicates the variations in speed on every portion of the track. The impressions also indicate the exact points of stoppage and the length of time consumed at each stop. This record may be made very exact, depending of course upon the speed of the ribbon 29.

At the upper part of the casing 1, is arranged a phonograph 52 of ordinary construction, the horn 53 thereof projecting through an opening in the front of the casing. The phonograph is operated by a train of gears 54, driven by a spring 55, which spring is connected to a mutilated gear 56. The gear 56 is normally retained immovable by a pawl 57 engaging the teeth thereof, the pawl being pivoted as at 58, and retained in operative position by a spring 59.

The free end of the pawl 57 projects into the path of the wires 34 before described, which engage and release the mutilated gear to permit the phonograph to operate some little time before the point to which the data pertains is to be announced. If, for instance, merely a station name is to be announced, it would possibly be necessary only to permit the gear wheel 56 to move the distance between two teeth. Should, however, other data be included, a longer distance might be required, for which purpose the gear is provided with mutilated spaces as shown.

It will be understood that the record in the phonograph is prepared in accordance with the line of road upon which it is to be operated, as is also the ribbon 20. For a reverse trip over the road, it would be necessary to reverse the ribbon 20 upon the reels and to also insert a reverse record in the phonograph.

It will be noticed from an inspection of Fig. 1, that the ribbon 20 extends below the ribbon 29, and a window 45 is provided in the casing through which the front face of the belt 20 may be observed. On the front face of the said ribbon, is printed the data found on the stamps, in such position that when the part controlling the phonograph mechanism is released, the inscription corresponding to the matter announced by the phonograph will appear at the window 45. It will be noticed that the free end of the pawl 57 extends to a point near the place where the stamps are impressed on the ribbon 29, so that the phonograph restraining mechanism is released a short time before the recording mechanism is operated.

It will be evident from the description, that the matter on the different stamps is announced by the phonograph at the same time that it becomes visible through the window, both the audible and the visual announcements taking place a short time before the point is reached, at which time the recording mechanism comes into operation.

As shown in Figs. 1 and 2, the car axle 5 is provided with a clutch mechanism 65, of ordinary construction for connecting and disconnecting the gear wheel 6 with the axle. The clutch mechanism is arranged to un-

clutch when the motion of the car is reversed and to again connect the recorder with the axle when the car moves forward.

In Figs. 7 to 9 inclusive, is shown a mechanism for operating the stamps and the pencil regardless of the direction of movement of the car, so that it is not necessary to turn the car when making the return trip. In this construction, the platen 39 has pivotally connected therewith a pair of elbow levers 67, 68, extending in opposite directions, and each of the levers has the arm engaged by the ribbon 20, provided with a rule joint 69, so that in whichever direction the ribbon 20 is traveling, it will engage one elbow lever to operate the stamp, but will pass over the other, the rule joint permitting this movement. Two pencils 48^a and 48^b are provided, the pencils being slidably mounted in a bushing 51^a secured in the casing, and the pencil 48^a is normally pulled downward by a spring 50^a, the spring being connected at one end with the bushing, and at the other end with a collar 70 on the shank of the pencil. The pencil 48^b is normally pressed upward by a spring 50^b, arranged between the bushing and a collar 51^b on the shank of the pencil. Each of the pencils is connected at its upper end with one end of a rocking lever 71, which is pivoted as at 72, and the other arm of the rocking lever is provided with a rule joint 73, and is adapted to be engaged by a wrist pin 47 on the disk 46 before mentioned. The rule joint in the rocking lever connected to the pencil 48^a is arranged to move the pencil 48^a upward against the resistance of the spring when the free end of the rocking lever is depressed. As soon as the wrist pin 47 leaves the free end of the rocking lever, the spring moves the pencil quickly downward into contact with the ribbon 29 to make an impression thereon. The rule joint in the rocking lever connected with the pencil 48^b is arranged so that when the free end of the said lever moves upward, the pencil will be moved downward into contact with the ribbon.

It will be observed from the description, that in whichever direction the car is moving the ribbon 20 will properly operate the stamping mechanism, and the disk 46 will properly operate one of the pencils, so that it is only necessary to insert a reverse record in the phonograph. If desired, the pencil 29 may be provided at proper intervals with printed characters designating the hour and the divisions of the hour.

I claim—

1. A device of the class described, comprising a casing, a ribbon movable in the casing, spaced reels with which the ends of the ribbon are connected and upon which they wind, springs for tensioning the reels, a pair of rolls for moving the ribbon, a clock mechanism for operating the rolls, a second ribbon supported behind the first ribbon and in parallelism therewith, spaced reels with which the ends of the ribbon are connected and upon which they wind, springs for tensioning the reels, a pair of rolls for operating the second ribbon, said rolls being adapted to be driven from the car axle, said second ribbon being provided at intervals with transverse wires or rods projecting from each edge thereof, the wires or rods being spaced to correspond with the points on the road in regard to which data is to be recorded, stamps on the ribbon at intervals corresponding to the intervals between the rods, an elbow having one end forked for engagement by the ends of the wire, a platen on the other end for engaging the ribbon at the stamp corresponding to the wire for pressing said stamp against the first ribbon, a disk on one of the rolls which operate the second ribbon, a pencil provided with a point adjacent to the first ribbon, said disk being provided with a wrist pin for moving the pencil into engagement with the ribbon once during each revolution of the disk, a phonograph for announcing the data on the stamps, spring mechanism for operating the phonograph, means for normally retaining said mechanism in an inoperative position, and means whereby the rods of the second ribbon may release said retaining mechanism.

2. A device of the class described, comprising a casing provided with an opening, a ribbon movable before the opening, means for moving said ribbon, said means being adapted to be driven from the axle of the car, said ribbon being provided at intervals with transverse wires or rods projecting from each edge thereof, the wires or rods being spaced to correspond with the points on the road in regard to which data is to be recorded, stamps on the ribbon at intervals corresponding to the intervals between the rods, an elbow having one end forked for engagement by the ends of the wire, a platen on the other end for engaging the ribbon at the stamp corresponding to the wire, said ribbon being provided with inscriptions corresponding to the data on the stamps and spaced to appear at the opening previous to the engagement of the platen with the stamp, a second ribbon arranged in front of the first ribbon and adapted to receive the impressions of the stamps, a clock mechanism for moving said second ribbon, a pencil provided with a point adjacent to the second ribbon, means adapted to be operated from the axle of the car for moving said point at regular intervals into contact with the second ribbon, a phonograph for announcing the matter comprising the inscriptions, and means whereby the first ribbon will operate said phonograph when the inscription appears at the opening.

3. A device of the class described, comprising a casing provided with an opening, a ribbon movable before the opening, means for moving said ribbon, said means being adapted to be driven from the axle of the car, said ribbon being provided at intervals with transverse wires or rods projecting from each edge thereof, the wires or rods being spaced to correspond with the points on the road in regard to which data is to be recorded, stamps on the ribbon at intervals corresponding to the intervals between the rods, an elbow having one end forked for engagement by the ends of the wire, a platen on the other end for engaging the ribbon at the stamp corresponding to the wire, said ribbon being provided with inscriptions corresponding to the data on the stamps and spaced to appear at the opening previous to the engagement of the platen with the stamp, a second ribbon arranged in front of the first ribbon and adapted to receive the impressions of the stamps, a clock mechanism for moving said second ribbon, a pencil provided with a point adjacent to the second ribbon, and means adapted to be operated from the axle of the car for moving said point at regular intervals into contact with the second ribbon.

4. A device of the class described, comprising a casing provided with an opening, a ribbon movable before the opening, means for moving said ribbon, said means being adapted to be driven from the axle of the car, said ribbon being provided at intervals with transverse wires or rods projecting from each edge thereof, the wires or rods being spaced to correspond with the points on the road in regard to which data is to be recorded, stamps on the ribbon at intervals corresponding to the intervals between the rods, an elbow having one end forked for engagement by the ends of the wire, a platen on the other end for engaging the ribbon at the stamp corresponding to the wire, said ribbon being provided with inscriptions corresponding to the data on the stamps and spaced to appear at the opening previous to the engagement of the platen with the stamp, a second ribbon arranged in front of the first ribbon and adapted to recieve the impressions of the stamps, and a clock mechanism for moving said second ribbon.

5. A device of the class described, comprising a casing provided with an opening, a ribbon movable past the opening, means for moving said ribbon, said means being adapted to be operated from the axle of the car, stamps on the ribbon at intervals corresponding with points on the road in regard to which matter is to be recorded, a second ribbon arranged parallel with the first ribbon and adapted to receive the impressions of the stamps, a clock mechanism for moving said second ribbon, a platen for engaging the first ribbon to move the stamps into contact with the second ribbon, and means in connection with the second ribbon for operating said platen at the proper time, said first named ribbon being provided with inscriptions corresponding to the matter on the stamps and spaced to appear at the opening previous to the engagement of the platen with the stamp.

6. A device of the class described, comprising a casing provided with an opening, a ribbon movable past the opening, means for moving said ribbon, said means being adapted to be driven from the axle of the car, stamps on the ribbon at intervals spaced to correspond with points on the road in regard to which matter is to be recorded, a second ribbon arranged parallel with the first ribbon for receiving the impressions, a clock mechanism for operating said second ribbon, and means in connection with the first ribbon for moving the stamps into contact with the second ribbon at the proper time for making the record, said first ribbon being provided with inscriptions corresponding to the matter on the stamps and spaced to appear at the opening previous to the engagement of the platen with the stamp.

7. A device of the class described, comprising a casing provided with an opening, a ribbon movable past the opening, means for moving said ribbon, said means being adapted to be driven from the axle of the car, stamps on the ribbon at intervals spaced to correspond with points on the road in regard to which matter is to be recorded, a second ribbon arranged parallel with the first ribbon for receiving the impressions, a clock mechanism for operating said second ribbon, means in connection with the first ribbon for moving the stamps into contact with the second ribbon at the proper time for making the record, a phonograph for announcing the matter comprising the inscriptions, and means whereby the first ribbon will operate said phonograph when the inscription appears at the opening.

8. A device of the class described, comprising a casing, a ribbon in the casing, means for moving said ribbon longitudinally, said means being adapted to be driven from the axle of the car, stamps on the ribbon at intervals spaced to correspond with the points on the road in regard to which matter is to be recorded, a second ribbon arranged parallel with the first ribbon for receiving impressions, a clock mechanism for moving said second ribbon, and means in connection with the first ribbon for moving the stamps into contact with the second ribbon at the proper time for making the record.

9. A device of the class described, comprising a casing, a ribbon in the casing, means for moving said ribbon longitudi-

nally, said means being adapted to be driven from the axle of the car, stamps on the ribbon at intervals spaced to correspond with the points on the road in regard to which matter is to be recorded, a second ribbon arranged parallel with the first ribbon for receiving impressions, a clock mechanism for moving said second ribbon, means in connection with the first ribbon for moving the stamps into contact with the second ribbon at the proper time for making the record, a phonograph for announcing the matter on the stamps, and means whereby the first ribbon will operate said phonograph previous to the making of the record.

10. A device of the class described, comprising a ribbon, means for moving said ribbon longitudinally, said means being adapted to be operated by the forward movement of the car, stamps on the ribbon spaced to correspond with the points on the road in regard to which matter is to be recorded, a second ribbon arranged parallel with the first ribbon for receiving impressions, means in connection with the first ribbon for moving the stamps into contact with the second ribbon at the proper time, and a clock mechanism for moving said second ribbon.

11. A device of the class described, comprising a ribbon, means for moving said ribbon longitudinally, said means being adapted to be operated by the forward movement of the car, stamps on the ribbon spaced to correspond with the points on the road in regard to which matter is to be recorded, a second ribbon arranged parallel with the first ribbon for receiving impressions, means in connection with the first ribbon for moving the stamps into contact with the second ribbon at the proper time, and means for moving said second ribbon continuously at a definite rate of speed.

12. A device of the class described, comprising a ribbon, means for moving said ribbon longitudinally, said means being adapted to be operated by the forward movement of the car, a second ribbon, means for moving said second ribbon continuously at a predetermined speed, and means operated by the first ribbon for making impressions on the second ribbon at predetermined intervals.

13. In a device of the class described, a recording mechanism, and means for operating said mechanism comprising a ribbon provided at intervals with transverse wires or rods for engaging and operating the recording mechanism, said rods being spaced to correspond with the location of points on the line about which data is to be recorded, said means being adapted to be operated by the longitudinal movement of the car.

14. In a device of the class described, a ribbon adapted to be moved longitudinally by the bodily movement of the car, a second ribbon, means for moving the second ribbon continuously at a predetermined speed, and means operated by the first ribbon for making impressions on the second ribbon at predetermined intervals.

WILLIS BYRON WOODRUFF.

Witnesses:
J. S. WILSON,
FELIX B. WILKINSON.