CONVENTION

AUSTRALIA

Patents Act 1990

655484

REQUEST FOR A STANDARD PATENT

AND NOTICE OF ENTITLEMENT

The Applicant identified below requests the grant of a patent to the nominated person identified below for an invention described in the accompanying standard complete patent specification.

[70,71]Applicant and Nominated Person:

Ciba Corning Diagnostics Corp.
63 North Street, Medfield, Massachusetts, 02052, UNITED STATES OF AMERICA

[54]Invention Title:

NOVEL PVC COATINGS FOR ELECTRODES

[72]Actual Inventors:

Mark W. Boden
Vincent A. Perciaccante
Stephen B. Ruiz

[74]Address for Service:

PHILLIPS ORMONDE & FITZPATRICK
367 Collins Street
Melbourne 3000 AUSTRALIA

[31,33,32]

Details of basic application(s):-

817,721	UNITED STATES OF AMERICA	US	7 January 1992

Applicant states the following:

1. The nominated person is the assignee of the actual inventor(s)

2. The nominated person is
~~- the applicant~~
- the assignee of the applicant
~~- authorised to make this application by the applicant~~
of the basic application.

3. The basic application~~(s)~~ was/~~were~~ the first made in a convention country in respect of the invention.

The nominated person is not an opponent or eligible person described in Section 33-36 of the Act.

28 July 1992

Ciba Corning Diagnostics Corp.
By PHILLIPS ORMONDE & FITZPATRICK
Patent Attorneys
By

David B Fitzpatrick

Our Ref : 299551

5999q

AU9220581

(12) PATENT ABRIDGMENT (11) Document No. AU-B-20581/92
(19) AUSTRALIAN PATENT OFFICE (10) Acceptance No. 655484

(54) Title
NOVEL PVC COATINGS FOR ELECTRODES

International Patent Classification(s)
(51)[5] C08G 077/442 C08F 008/42

(21) Application No. : **20581/92** (22) Application Date : **28.07.92**

(30) Priority Data

(31) Number	(32) Date	(33) Country
817721	07.01.92	US UNITED STATES OF AMERICA

(43) Publication Date : **08.07.93**

(44) Publication Date of Accepted Application : **22.12.94**

(71) Applicant(s)
CIBA CORNING DIAGNOSTICS CORP.

(72) Inventor(s)
MARK W. BODEN; VINCENT A. PERCIACCANTE; STEPHEN B. RUIZ

(74) Attorney or Agent
PHILLIPS ORMONDE & FITZPATRICK , 367 Collins Street, MELBOURNE VIC 3000

(56) Prior Art Documents
GB 1485263
US 4146585
US 4341686

(57) Claim

1. A polymer of polyvinylchloride and amino- or thio-substituted organotrialkoxysilane of the formula (I):

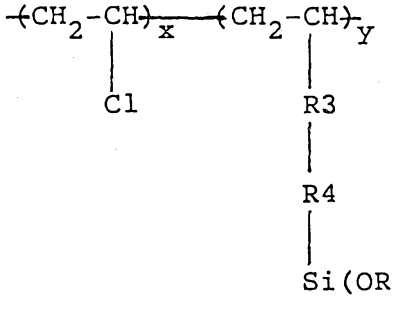

where x and y represent moles of monomer incorporated in the polymer and x/y represents the mole ratio of

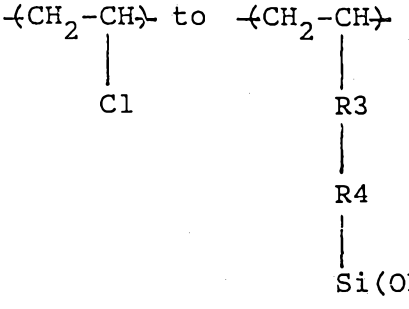

in the polymer, R3 is either an -NH- or -S- group, R4 is an alkylene, aromatic, or any organic spacer group, and R is any alkyl group, where the three R substituents do not need to be the same.

.../2

8. A process for making a polymer of claim 1 including reacting polyvinylchloride and amino- or mercapto ~~thio~~-substituted organotrialkoxysilane in the presence of a polar aprotic solvent.

12. A process of claim 8 in which the reaction is conducted between 5 and ~~50~~ 100 degrees C.

13. A process of claim 12 in which the reaction is conducted at approximately 20 degrees C.

14. A process of claim 8 wherein the aprotic solvent is selected from the group hexamethylphosphoramide, dimethyl sulfoxide; 2-methylpyrrolidinone; 1,3-dimethylimidizolon one; 1,3-dimethyl-2-pyrimidinone; 1-methyl-2-pyrrolidone; 1,3-dimethyl-2-imidazolinone; N,N-dimethyl formamide; and N,N-dimethyl acetamide.

AUSTRALIA

Patents Act

655484

COMPLETE SPECIFICATION
(ORIGINAL)

Class Int. Class

Application Number:
Lodged:

Complete Specification Lodged:
Accepted:
Published:

Priority

Related Art:

Name of Applicant:

Ciba Corning Diagnostics Corp.

Actual Inventor(s):

Mark W. Boden
Vincent A. Perciaccante
Stephen B. Ruiz

Address for Service:

PHILLIPS ORMONDE & FITZPATRICK
Patent and Trade Mark Attorneys
367 Collins Street
Melbourne 3000 AUSTRALIA

Invention Title:

NOVEL PVC COATINGS FOR ELECTRODES

Our Ref : 299551
POF Code: 17948/17948

The following statement is a full description of this invention, including the best method of performing it known to applicant(s):

5006

NOVEL PVC COATINGS FOR ELECTRODES

BACKGROUND

The reaction of nucleophiles with polyvinylchloride (PVC) is known. (Ma, S.C. et al, Anal. Chem. 60 (1988) 2293; Chenh, P. et al, Nat'l. Sci. Council Monthly, ROC (1988) 8(4) (1988) 313; Biswas, Mukul et al, Indian J. of Technol. 28 (1990) 111) However, it is not common to derivatize PVC for most applications due to the fragility of the polymer and the relative difficulty of the substitution reaction. Elevated temperatures can lead to dehydrochlorination, which is autocatalytic. The addition of nucleophiles can also catalyze this process. The resultant polymer degradation is also accelerated by light, especially when it is in solution and at elevated temperatures. The derivatization of PVC by reaction with amines is normally carried out at high temperatures (Ma; Chenh; Biswas) and/or in a nonsolvent, such as methanol (Ma; Chenh). The result, in the first case, is a PVC which is severely degraded, and, in the second case, a polymer which is only partially derivatized. In the extreme worst case, the nucleophile is simply entrapped in the polymer matrix, giving rise to an apparent substitution reaction.

PVC is used in a number of applications in which it is desirable to have adhesion between the PVC and some substrate. Generally, the adhesion is achieved by treatment of the surface in question with a silane, such as

dimethyldichlorosilane. (Harrison, D.J., J. Electroanal. Chem. 202 (1986) 75; Moody, G.J. et al, Analyst 113 (1988) 1703; Petrarch Systems, "Silicon Compounds, Register and Review" (1987) 54) In such a case, the adhesion is due to hydrophobic interactions, not the formation of covalent chemical bonds. The adhesion can be somewhat improved by the use of a silane which can form hydrogen bonds with the PVC, as these interactions are stronger than simple hydrophobic interaction.

One way to get around the fairly poor adhesion obtained by these methods is to heat the PVC extensively, in the presence of a binding agent, after it has been applied to the substrate. (Chakrabarti, S. et al, U.S. Patent 4,341,686) Again, this leads to degradative dehydrochlorination of the polymer. Also, the material obtained by this method is not well-defined, nor is it necessarily crosslinked throughout the polymer layer.

One area were PVC adhesion is of particular importance is in the field of ion selective electrodes (hereafter referred to as ISEs). An integral part of these electrodes are the membranes which contain the ion selective components. These membranes are most often made from highly plasticized PVC, indeed, the plasticizer content is nearly always greater than the PVC content. This fact is important, since, due to the oily nature of the plasticizers, adhesion of this membrane to any surface is extremely difficult to achieve.

Failure of the membrane to adhere to the electrode substrate can lead to shorting or shunt formation between the working electrode and the reference electrode when the entire electrode is immersed in aqueous analyte.

Another disadvantage of the highly plasticized formulations used in ISEs is their ability to flow over long

periods of time. The membranes are actually a viscous liquid; storage of the electrodes can result in membranes which are not of uniform thickness. The fact that the novel polymer crosslinks upon curing prevents flow in the resulting membrane.

Summary

This invention involved the discovery of novel polymers and a process for their preparation. The polymers were prepared by the nucleophilic substitution, at room temperature, of PVC with substituted organotrialkoxysilanes, which can be cured at room temperature to give adhesion of PVC to hydrophilic substrates. These polymers are particularly useful as adhesion promoters in ion-selective electrodes. The invention also involved the application of these adhesive primers to planar electrode substrates to give greatly improved performance in the response of ISEs.

Brief Description of the Drawing

Figure 1 shows the apparatus which is used for synthesizing the PVC copolymer coatings. Figure 2 represents constant pressure apparatus, which is used to maintain an inert atmosphere at 1 atmosphere pressure for use in the reaction.

Detailed Description of the Invention

This invention involved the synthesis and use of polymer coatings that chemically bond to electrodes. In the process of developing these materials, novel polymers were developed, as well as methods for preparing these polymers. In addition, novel ways of obtaining adhesive membranes for ISEs were developed.

AUSTRALIAN PATENT OFFICE

It has long been known that silanes could be used to coat metal, glass and other surfaces that contain hydroxy groups or oxides. (Petrarch) This process, termed silanization, is used as a means of making surfaces hydrophobic and, in this case, as a means of reducing the driving force for the migration of aqueous contaminants under membranes.

By creating a polymer that would chemically adhere to the surface, a much more durable coating was made, thus extending significantly the life of electrodes. The polymer that was needed was one that would not only adhere to the electrode, but also provide the matrix necessary for ion determination. Furthermore, the novel polymers were found to greatly reduce the short formation under the membrane caused by water leakage.

The polymer invented herein was a novel compound of PVC and substituted organotrialkoxysilane (hereafter referred to as OTAS). The current polymer was synthesized by reacting PVC with a substituted OTAS, in the presence of a polar aprotic solvent. Reaction temperatures from 5 to 100 degrees C were evaluated and found acceptable for this reaction, although a reaction temperature of room temperature (approximately 20 degrees C) was found optimum. This reaction was found to work for any molecular weight PVC, namely molecular weights of 1,000 and higher. The preferred molecular weight range was found to be 10,000 - 100,000, while the optimum molecular weight was found to be approximately 62,000.

In general, compounds of the structure

$$R1\text{-}R2\text{-}Si\text{-}(OR)_3$$

can be used to react with the PVC, where

R1 can be an amino or mercapto group,

R2 can be an ~~alkyl~~ alkylene or aromatic group or any organic spacer

AUSTRALIAN PATENT OFFICE

group (for example, ethers, alkenes, ketones, esters, etc.), R can be any alkyl group, including, for example, methyl, ethyl, etc., and the three R substituents do not need to be the same.

It was found that the molar ratio of PVC to OTAS in the reaction could vary from 100:1 to 1:10, with the preferred ratio being between 20:1 and 1:3. The optimum ratio was found to be approximately 5:1.

Once the reaction between PVC and OTAS occurs, compounds having the formula (I):

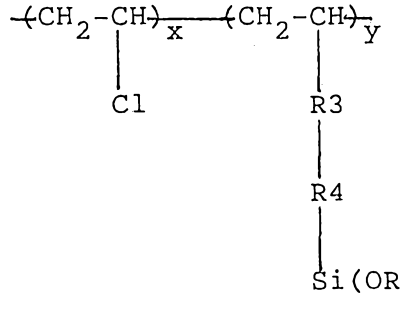

are formed. In these polymers, R3 is either an -NH- or -S- group, R4 is an alkylene, aromatic, or any organic spacer group, and R is any alkyl group, where the three R substituents do not need to be the same, and x and y represent moles of monomer incorporated in the polymer and x/y represents the mole ratio of

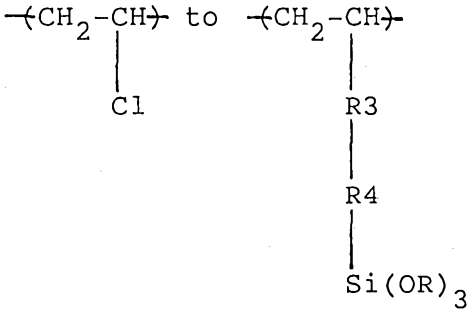

in the polymer.

AUSTRALIAN PATENT OFFICE

group (for example, ethers, alkenes, ketones, esters, etc.), R can be any alkyl group, including, for example, methyl, ethyl, etc., and the three R substituents do not need to be the same.

It was found that the molar ratio of PVC to ATAS in the reaction could vary from 100:1 to 1:10, with the preferred ratio being between 20:1 and 1:3. The optimum ratio was found to be approximately 5:1.

Once the reaction between PVC and ATAS occurs, compounds having the formula

$$(CH_2\text{-}CHCl)_x - (CH_2\text{-}CHR3\text{-}R4\text{-}Si\text{-}(OR)_3)_y$$

are formed. In these copolymers,
R3 is either an amino or mercapto group,
R4 is an alkyl, aromatic, or any organic spacer group, and
R is any alkyl group, where the three R substituents do not need to be the same.

The copolymer has been found to perform satisfactorily when the ratio of y:x varies from 1:20 to 1:500. The preferred ratio was found to be 1:100 to 1:200, while the optimum ratio was found to be approximately 1:170 (or approximately 0.6%).

The preferred aprotic solvent used in the synthesis of PVC-silane is hexamethylphosphoramide (HMPA). Examples of other suitable solvents include, but are not limited to, dimethylsulfoxide (DMSO); 2-methylpyrrolidinone; 1,3-dimethylimidizolonone; 1,3-dimethyl-2-pyrimidinone; 1-methyl-2-pyrrolidone; 1,3-dimethyl-2-imidazolinone; N,N-dimethyl formamide; and N,N-dimethyl acetamide. These solvents must be scrupulously cleaned and dried in order to remove any traces of water and/or basic moieties and other impurities. The PVC is soluble in HMPA but not in DMSO. Thus, the reaction may be carried out as a one- or two-phase process.

AUSTRALIAN PATENT OFFICE

It is desirable that the reaction take place at room temperature, to avoid degradation of the PVC. Second, the reaction is carried out under a blanket of dry, inert gas, preferably nitrogen or argon, to prevent oxidation of the polymer. Third, the system is also kept free from light to prevent photodegradation of the polymer during the reaction. Fourth, the system must be scrupulously dried to avoid premature curing of the product. The first three of these precautions have been found to prevent discoloration due to conjugated alkene formation, as all three or any combination of them catalyze dehydrochlorination in PVC.

In Chakrabarti, a PVC and substituted OTAS were mixed at the point of application, then heated to 80 degrees C to provide an adhesive for attaching cover layers of cellular and non-cellular polyurethane layers. The product was not isolated or identified. The instant polymer is an isolated and distinct chemical species of known composition. The method of adhesion in Chakrabarti depends on the migration of the silane to the surface of the polymer, where it is cured at elevated temperatures. One advantage of the instant polymer is that the siloxane groups are dispersed throughout the polymer film. This gives rise to a uniformly crosslinked system upon curing, giving strength through the whole polymer layer, rather than just at the surface. In addition, the instant polymer is much more flexible, giving the possibility of application under a variety of conditions, and room temperature curing. This property is particularly important for use in ISEs, since the electrochemistry is very sensitive to the polymer matrix; only minimal variation from the parent PVC can be made without significantly affecting performance.

In using the novel polymers to coat substrates, between 0.1 and 10% by weight solutions of the substituted PVC in

AUSTRALIAN PATENT OFFICE

volatile solvents, for example anhydrous tetrahydrofuran, are prepared. Optimum concentration was approximately 1% by weight. The substrates were coated to give layers of from 0.1 to 10 microns thick, preferably 1 micron in thickness. Cure times varied from 2 to 24 hours, depending upon the curing temperature, which could range from below room temperature (as low as approximately 0°C.) up to approximately 100°C. The preferred temperature for curing was room temperature. Adhesion was improved by soaking the coated substrate in water for 5 minutes prior to curing.

Analysis of variations of the instant polymer showed that, with the optimal-performing polymer, 0.5 - 0.6% of the chlorines of the PVC was reacted with the silane. Somewhat less preferred, but still very good, performance was found for substitution ranging from 0.15 - 4.5%. Other percent substitutions, from 0.05% up to the point where the polymer fails to behave as PVC (which is determined by the particular application), have also been found to perform satisfactorily. The reaction of PVC with OTAS releases, as a by-product, both hydrogen and chloride ions. It is useful to add a proton scavenger to the system, to remove the hydrogen which is released (along with the chlorine) when the PVC reacts with the OTAS. The amount of proton scavenger needed is dependent on the amount of substitution which is obtained. Ratios of moles of scavenger to moles of total chlorine in PVC starting material have been investigated, and acceptable performance has been found when the ratios range between 1:100 and 10:1. Preferred ratios have been found to range between 1:20 and 10:1. Optimum performance has been found when the ratio is approximately 1:10.

The reaction by-product, hydrochloric acid (HCl), may be removed by reaction with hindered bases such as 2,6-di-t-

AUSTRALIAN PATENT OFFICE

butylpyridine, diazobicyclo compounds, such as 1,4-diazabicyclo[2.2.2]octane, 1,5-diazabicyclo[4.3.0]non-5-ene, 1,8-diaza[5.4.0]undec-7-ene, or by tertiary amines such as tridodecyl amine, diisopropyl ethyl amine or di-t-butyl ethyl amine. In addition, the HCl may be removed by reaction with the excess substituted OTAS, since there is a large excess of this compound in the reaction.

The instant polymers and processes are useful primarily as adhesion promoters in ion selective and planar electrodes. It should be emphasized that the instant coating techniques are primarily useful for electrodes made of glass or aluminum or other metals/metal oxides. However, they are also usable on any materials that have hydroxyl or other groups that can react with the substituted OTAS.

The polymer materials and techniques disclosed herein also have applicability in various other areas. For example, the materials and processes have applicability in the adhesive area.

The following examples describe various aspects of the synthesis and use of the novel polymers described herein, but are not intended to limit the usefulness of the newly invented materials or processes.

EXAMPLE 1

The apparatus used to synthesize the PVC copolymer coatings is shown in Figure 1. 1 is a powder addition funnel. 2 is a pressure equalizing addition funnel. 3 is a sampling and draw-off tube with a 3-way stopcock. 4 is a 3-neck roundbottom flask. 5 is a side-arm Erlenmeyer flask containing precipitation solvent. 13 represent stirrers.

Figure 2 represents the constant pressure apparatus, which is used to produce an inert atmosphere at 1 atmosphere pressure for use in the reaction. 6 is an Erlenmeyer flask

AUSTRALIAN PATENT OFFICE

with a 2-hole rubber stopper (20), having a mercury resevoir (7). One opening is connected to the atmosphere (18), while the other (19) is connected to the rest of the system. 8 is a side-arm flask, containing potassium hydroxide pellets (9), covered with glass wool (10). The side arm is connected to a vacuum line, while the outlet of this flask is connected via a three-way stopcock (21) to either the balance of the system or an inert gas (12). To obtain a constant pressure, inert gas environment, the constant pressure system is introduced to vacuum through line 11 to remove all gases from the system. Line 11 is then sealed and line 12 opened to introduce argon (or another inert gas) to the system until the pressure is again at equilibrium with the atmosphere. This procedure is repeated two additional times to insure removal of all oxygen from the system. The outlet 14 is then connected to the appropriate inlet to the reaction system (15, 16, or 17) without opening the system to the atmosphere.

All glassware used in the reaction is coated with black plastic to exclude light during the reaction. The reaction is maintained under a blanket of argon (or other inert gas) at atmospheric pressure. Initially, the system is set up with a measured amount of PVC in the powder funnel and a measured amount of the substituted QTAS in the addition funnel. A proton scavenger can be added to the addition funnel as well. The solvent for the reaction is present in the desired amount in the round bottom flask.

The solvent is purified to remove amines. It is refluxed in the presence of 4-nitrophenyl hippuric acid ester for 24 hours. The mixture is cooled and pure solvent isolated by distillation in vacuo. The distillate is stirred at 50°C. over barium oxide, in an atmosphere of dry nitrogen, for 24 hours. The solvent is isolated by

AUSTRALIAN PATENT OFFICE

distillation in vacuo, and the process is repeated to give clean, dry solvent for the reaction.

Polyvinylchloride, (5 gm, 0.08 mol) is added slowly and with rapid stirring to 100 ml of HMPA. The HMPA has been previously exhaustively purified as described above. The solution is stirred for 24 hours (a previously determined amount of time) at room temperature to insure that all PVC is dissolved in the solvent. After this time, aminopropyltriethoxysilane, (3.6 gm, 0.016 mol) is added to the rapidly stirred reaction dropwise. The solution is stirred under these conditions for 48 hours. It is purified by addition, still under the inert atmosphere, to 2 liters of dried and distilled methanol. The solid polymer is filtered off, under an inert atmosphere, then redissolved into scrupulously dried tetrahydrofuran and precipitated into hexane. Note that the polymer continues to be kept under an inert atmosphere. The filtration, dissolution, and precipitation into hexane is repeated once more. The process yields approximately 80% of the theoretical amount of the product, with a substitution (i.e. ratio of silicon to chlorine) of 0.6%. It should be stressed that any introduction of water at any stage in this process will lead to premature curing of the polymer, rendering it insoluble and useless for further processes.

EXAMPLE 2

A process similar to that used in Example 1 was used, except that other polar aprotic solvents were substituted for the HMPA. The solvents used were 2-methylpyrrolidinone, 1,3-dimethylimidizolonone, N,N-dimethylformamide, 1,3-dimethyl-2-pyrimidinone, and dimethylsulfoxide. The results were as follows:

Solvent	% substitution
hexamethylphosphoramide	0.60 - 0.79
1,3-dimethyl-2-imidazolinone	0.78
1,3-dimethyl-2-pyrimidinone	1.5
dimethyl sulfoxide	0.17
2-methyl-1-pyrrolidinone	4.5

EXAMPLE 3

A process similar to that used in Example 1 was used, except that different silanes were substituted for aminopropyltriethoxy silane. The silanes used were aminopropyltrimethoxy silane and mercaptopropyltriethoxy silane.

EXAMPLE 4

A process similar to that used in Example 1 was used, except that proton scavengers were added. The following proton scavengers were used: 2,6-di-t-butylpyridine,
1,4-diazabicyclo[2.2.2]octane,
1,5-diazabicyclo[4.3.0]non-5-ene,
1,8-diaza[5.4.0]undec-7-ene,
tridodecyl amine,
diisopropyl ethyl amine or
di-t-butyl ethyl amine.

It should be noted that the addition of these scavengers is particularly important in reactions involving mercaptosilanes.

The scavengers served to remove HCl, which could cause dehydrochlorination.

EXAMPLE 5

A process similar to that used in Example 1 was used except that differing amounts of substituted OTAS were used. The results are shown below.

Moles ATAS	Moles PVC	Reaction Time (min.)	Substitution
1	1	24	0.63
0.2	1	48	0.60
3	1	24	1.5

EXAMPLE 6

The novel polymers described above were analyzed using the following techniques. Percent substitution was determined by elemental analysis, using the ratio of nitrogen and/or silicon to chlorine found in the product. The thoroughness of the removal of solvent was also determined by elemental analysis, using the ratio of silicon to nitrogen, with complete removal being achieved when the ratio is 1:1. FTIR analysis was also used to confirm complete removal of solvent. Results of typical analyses are shown below.

Elemental Analysis

Element	Percent Found
Carbon	38.84
Hydrogen	4.91
Nitrogen	0.12
Chlorine	53.45
Silicon	0.24

EXAMPLE 7

The application method used to coat planar substrates with the substituted PVC is as follows:

The substituted PVC is dissolved in anhydrous

tetrahydrofuran to give a 1% by weight solution. To minimize water contamination and premature polymer reaction, the solution is mixed in a dry glove box and stored in a presilanized bottle with a septum cap. The substrate is cleaned prior to coating with techniques suitable for removing surface particulates and organic contamination (grease). The preferred method used was a water rinse, N2 purge to dry, and plasma etching (3 min. Oxygen and 5 min. Argon cycle used at 300 watts). Upon removal from the plasma etcher, the substrates were spin coated with the substituted PVC solution to give a layer approximately 1 micron thick. The cure is affected at room temperature at high humidity over a 24-hour period.

EXAMPLE 8

An application method similar to that used in Example 7 except that the coated substrates were cured at 80°C for 2 hours. The shorter cure time was at the expense of increased degradation of PVC.

EXAMPLE 9

An application method similar to that used in Example 7 and Example 8 except that non-planar substrates are coated using techniques suitable for their geometries, such as, dip coating and spray coating.

The claims defining the invention are as follows:

1. A polymer of polyvinylchloride and amino- or thio-substituted organotrialkoxysilane of the formula (I):

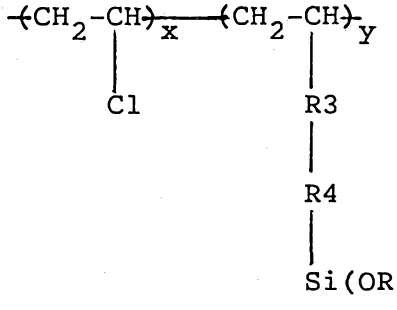

where x and y represent moles of monomer incorporated in the polymer and x/y represents the mole ratio of

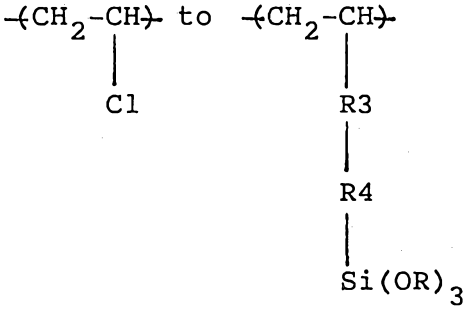

in the polymer, R3 is either an -NH- or -S- group, R4 is an alkylene, aromatic, or any organic spacer group, and R is any alkyl group, where the three R substituents do not need to be the same.

2. A polymer of claim 1 wherein the molecular weight of the polyvinylchloride is greater than 1,000.

3. A polymer of claim 2 wherein the molecular weight of the polyvinylchloride is between 10,000 and 100,000.

4. A polymer of claim 3 wherein the molecular weight of the polyvinylchloride is approximately 62,000.

5. A polymer of claim 1 wherein the percent of chlorines in the polyvinylchloride which reacts with the organotrialkoxysilane is greater than or equal to 0.05%.

6. A polymer of claim 5 wherein the percent of chlorines in the polyvinylchloride which reacts with the organotrialkoxysilane is between 0.15 and 4.5%.

7. A polymer of claim 6 wherein the percent of chlorines in the polyvinylchloride which reacts with the organotrialkoxysilane is approximately 0.6%.

8. A process for making a polymer of claim 1 including

AUSTRALIAN PATENT OFFICE 40

reacting polyvinylchloride and amino- or mercapto-substituted organotrialkoxysilane in the presence of a polar aprotic solvent.

9. A process of claim 8 wherein the ratio of x:y is between 100:1 and 1:10.

10. A process of claim 9 wherein the ratio of x:y is between 20:1 and 1:3.

11. A process of claim 10 wherein the ratio of x:y is approximately 5:1.

12. A process of claim 8 in which the reaction is conducted between 5 and 100 degrees C.

13. A process of claim 12 in which the reaction is conducted at approximately 20 degrees C.

14. A process of claim 8 wherein the aprotic solvent is selected from the group hexamethylphosphoramide, dimethyl sulfoxide; 2-methylpyrrolidinone; 1,3-dimethylimidizolon one; 1,3-dimethyl-2-pyrimidinone; 1-methyl-2-pyrrolidone; 1,3-dimethyl-2-imidazolinone; N,N-dimethyl formamide; and N,N-dimethyl acetamide.

15. A process of claim 14 wherein the aprotic solvent is hexamethylphosphoramide.

16. A process of claim 8 which is conducted in a two-phase system.

17. A process of claim 8 which is conducted in a one-phase system.

18. A process of claim 8 in which the reaction is conducted in an environment including a dry, inert gas.

19. A process of claim 18 in which the inert gas is argon or nitrogen.

20. A process of claim 8 in which the reaction is conducted in the dark.

21. A process of claim 8 which is conducted in the presence of a proton scavenger or to which a proton scavenger is added after the reaction is begun.

22. A process of claim 21 wherein the proton scavenger is selected from hindered bases, diazobicyclo compounds, tertiary amines and excess substituted ATAS.

23. A process of claim 22 wherein the proton scavenger is selected from the group 2,6-di-t-butylpyridine, 1,4-

AUSTRALIAN PATENT OFFICE

diazabicyclo]2.2.2]octane, 1,5-diazabicyclo[4.3.0]non-5-ene, 1,8-diaza[5.4.0]undec-7-ene, tridodecyl amine, diisopropyl ethyl amine or di-t-butyl ethyl amine.

24. A process of claim 21 wherein the ratio of moles of proton scavenger to moles of chlorine in the starting material ranges from 1:100 to 10:1.

25. A process of claim 24 in which the ratio is between 1:20 and 10:1.

26. A process of claim 25 in which the ratio is approximately 1:10.

27. A coating for electrodes including a polymer of polyvinylchloride and amino- or thio-substituted organotrialkoxysilane, according to claim 1.

28. A coating of claim 27 wherein the electrodes are ion selective electrodes or planar electrodes.

29. A coating of claim 28 having sufficient cross linking such that the coating has the non-flow characteristics of a solid.

30. A coating of claim 27 including between 0.1 and 10% by weight substituted polyvinylchloride polymer in a volatile solvent.

31. A coating of claim 30 wherein the polymer concentration is approximately 1% by weight.

32. A coating of claim 30 wherein the solvent is anhydrous tetrahydrofuran.

33. A coating of claim 27 which, after curing, produces a layer 0.1 to 10 microns thick.

34. A coating of claim 33 which is approximately 1

AUSTRALIAN PATENT OFFICE

micron thick.

35. A process of coating electrodes with the polymer of polyvinylchloride and amino- or thio-substituted organotrialkoxysilane of claim 1.

36. A process of claim 35 comprising

(a) dissolving said polyvinyl chloride in tetra-hydrofuran under anhydrous conditions,

(b) cleaning said electrode by removing surface particulates and organic contamination,

(c) plasma etching said cleaned electrode, and

(d) spin coating said cleaned, etched electrode.

37. A process according to claim 8 substantially as hereinbefore described with reference to Examples 1 to 5.

38. A process according to claim 35 substantially as hereinbefore described with reference to Examples 7 to 9.

DATED : 8 APRIL 1994
PHILLIPS ORMONDE & FITZPATRICK
Attorneys For:
CIBA CORNING DIAGNOSTICS CORP.

David B Fitzpatrick

75011

AUSTRALIAN PATENT OFFICE

Abstract

This invention involved the discovery of novel polymers and a process for their preparation. The polymers were prepared by the nucleophilic substitution, at room temperature, of PVC with substituted alkyltrialkoxysilanes, which can be cured at room temperature to give adhesion of PVC to hydrophilic substrates. These polymers are particularly useful as adhesion promoters in ion-selective electrodes. The invention also involved the application of there adhesive primers to planar electrode substrates to give greatly improved performance in the response of ion-selective electrodes.

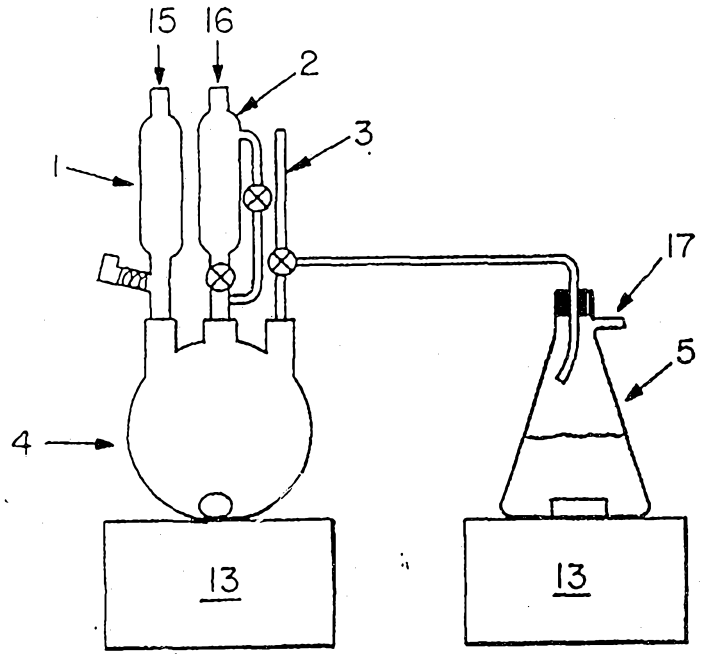

Fig. 1

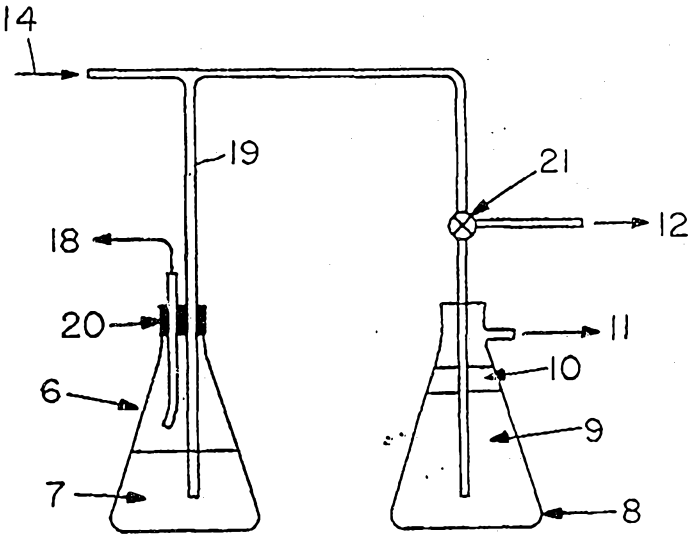

Fig. 2