Aug. 23, 1938. C. A. FUCHS 2,127,507

PRINTING INSTRUMENTALITY FOR TYPEWRITING MACHINES

Filed Jan. 29, 1935 10 Sheets-Sheet 1

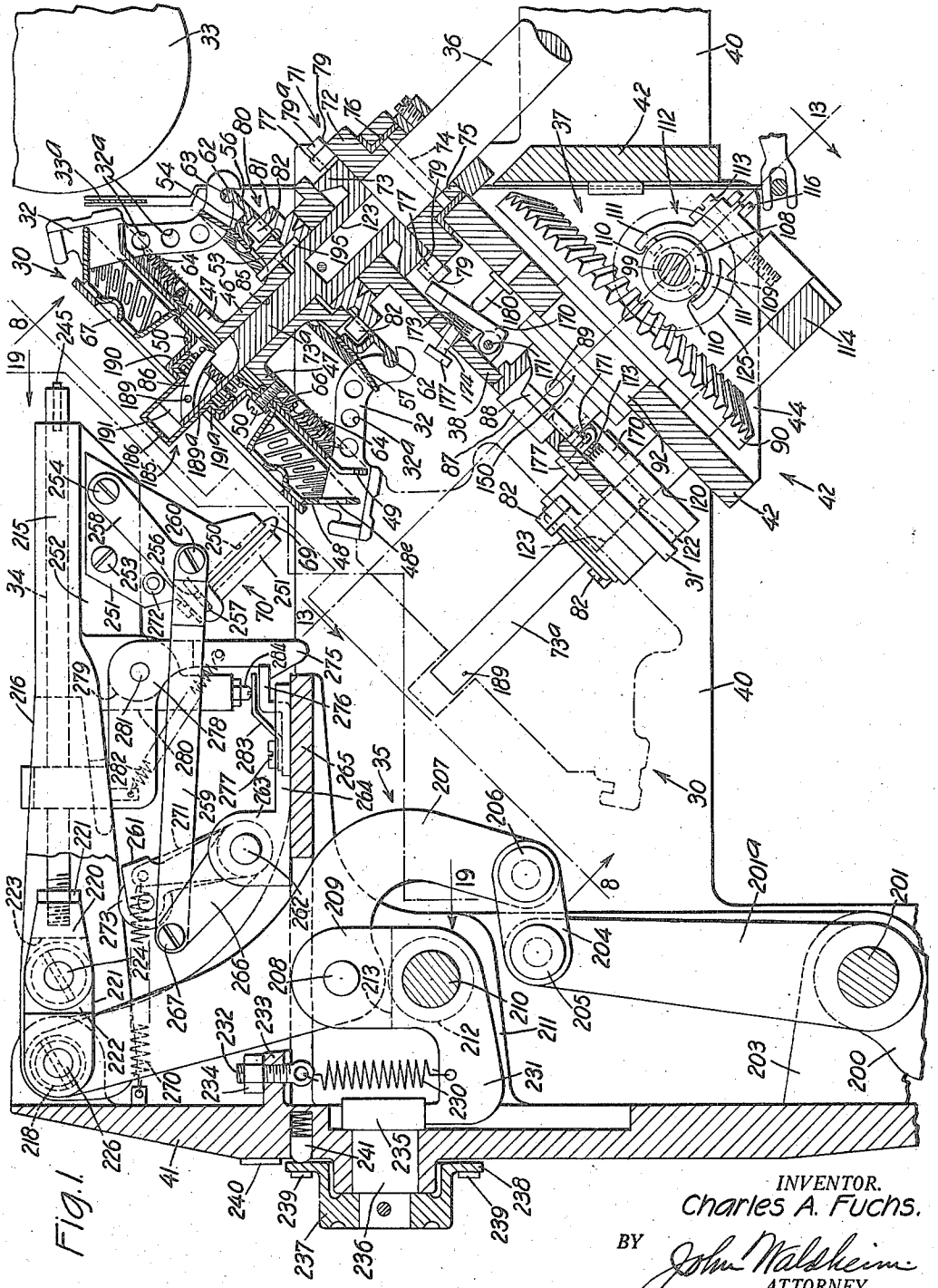

Fig. 1.

INVENTOR.
Charles A. Fuchs.
BY John Waldheim
ATTORNEY

Aug. 23, 1938. C. A. FUCHS 2,127,507

PRINTING INSTRUMENTALITY FOR TYPEWRITING MACHINES

Filed Jan. 29, 1935 10 Sheets-Sheet 2

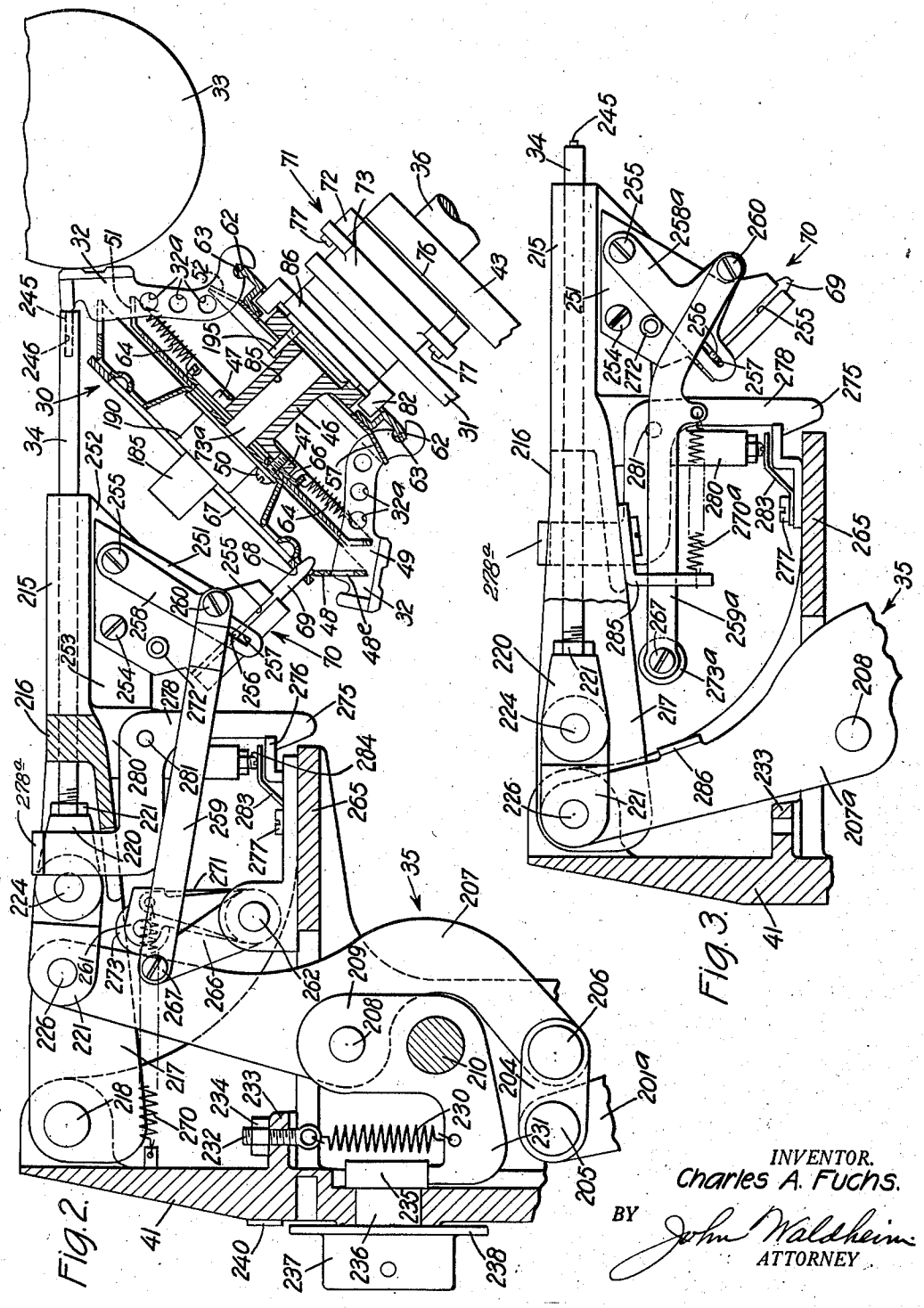

Fig. 2.

Fig. 3.

INVENTOR.
Charles A. Fuchs.
BY John Waldheim
ATTORNEY

Aug. 23, 1938. C. A. FUCHS 2,127,507

PRINTING INSTRUMENTALITY FOR TYPEWRITING MACHINES

Filed Jan. 29, 1935 10 Sheets-Sheet 3

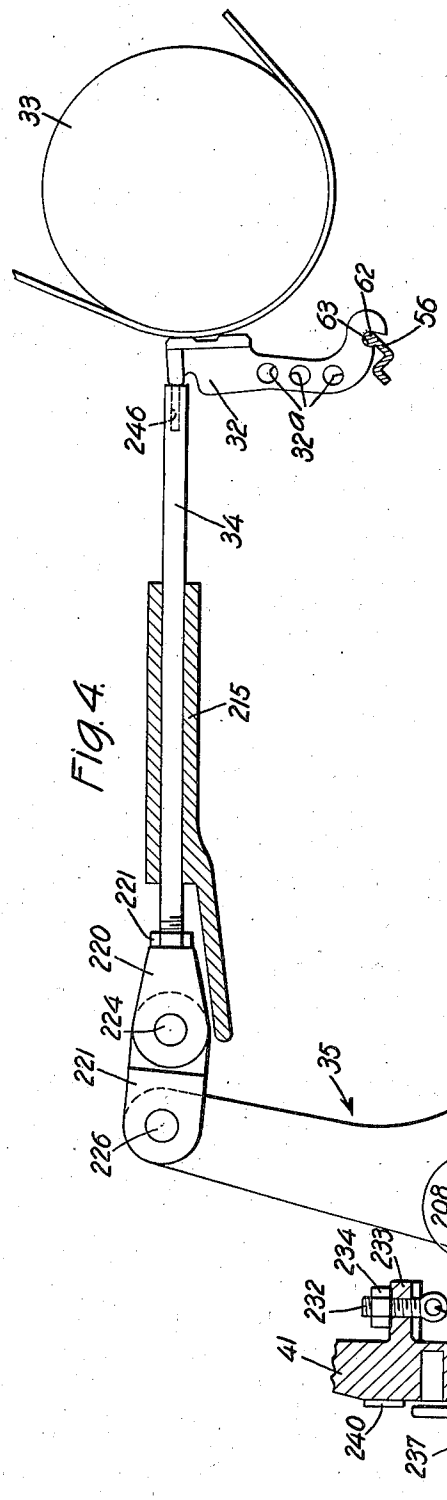

Fig. 4.

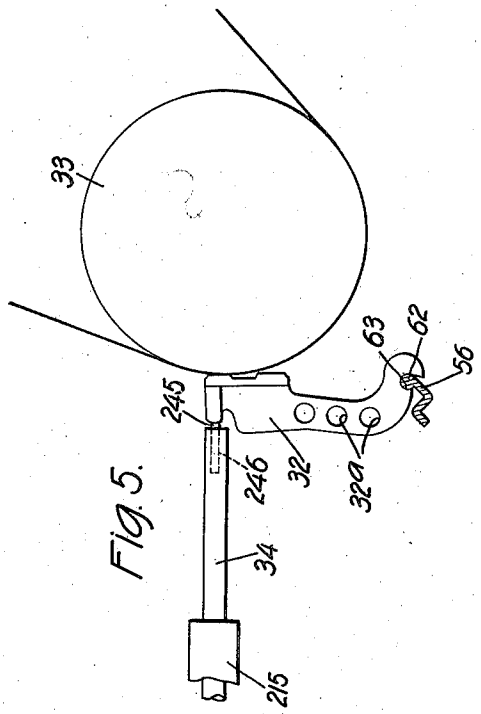

Fig. 5.

INVENTOR.
Charles A. Fuchs.
BY
John Waldheim
ATTORNEYS.

Aug. 23, 1938. C. A. FUCHS 2,127,507

PRINTING INSTRUMENTALITY FOR TYPEWRITING MACHINES

Filed Jan. 29, 1935 10 Sheets-Sheet 4

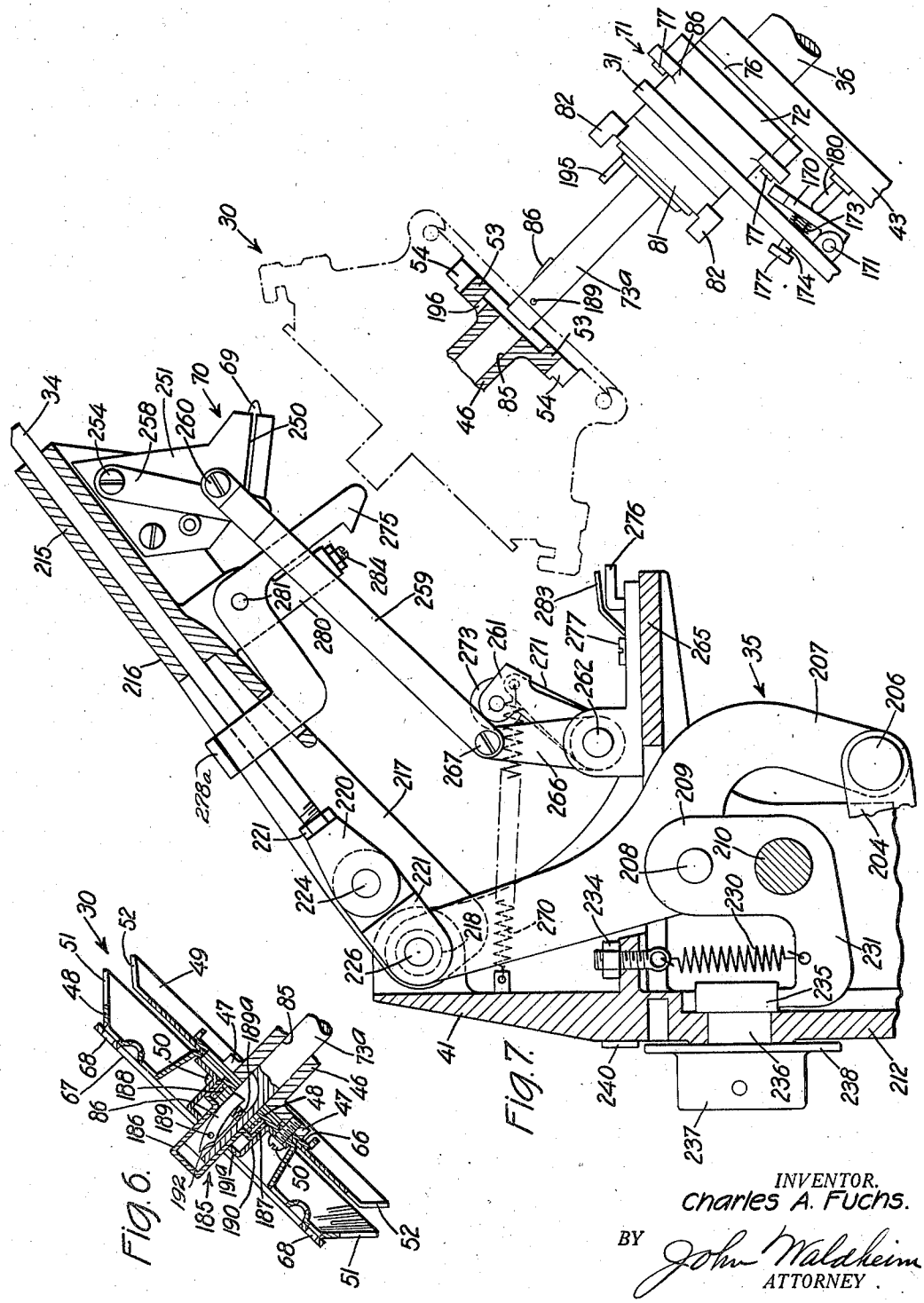

Fig. 7.

Fig. 6.

INVENTOR.
Charles A. Fuchs.
BY John Waldheim
ATTORNEY.

Aug. 23, 1938. C. A. FUCHS 2,127,507

PRINTING INSTRUMENTALITY FOR TYPEWRITING MACHINES

Filed Jan. 29, 1935 10 Sheets-Sheet 5

Fig. 8.

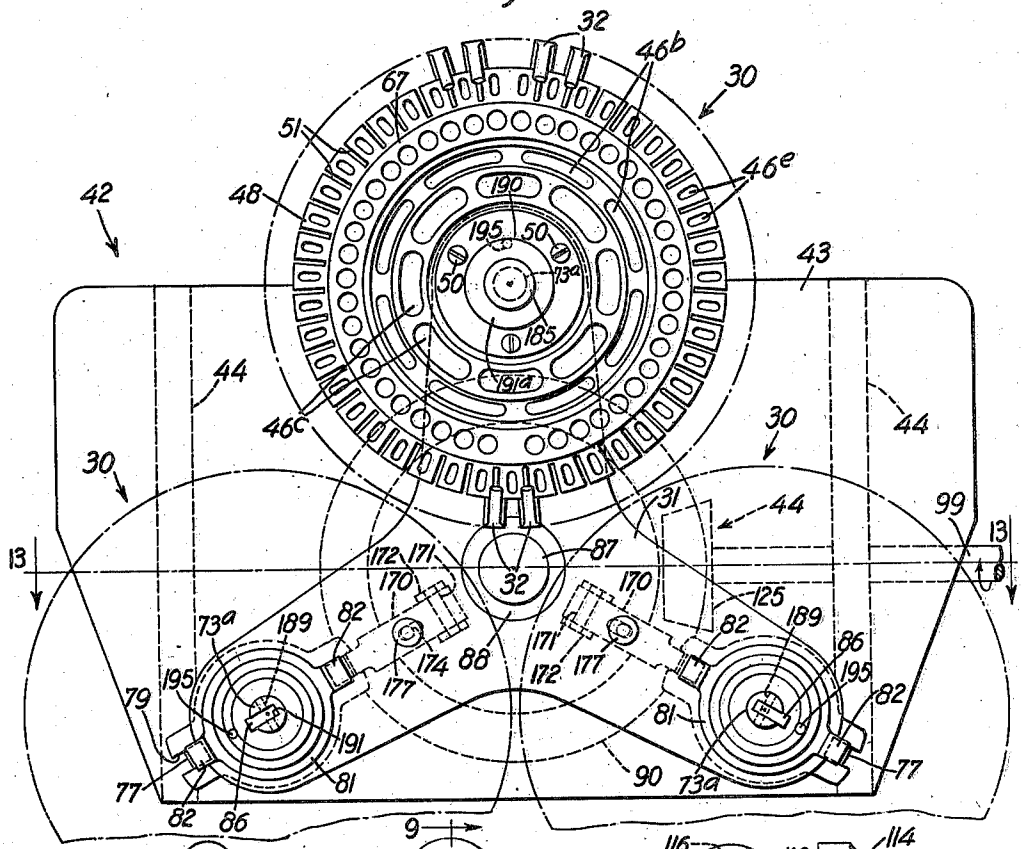

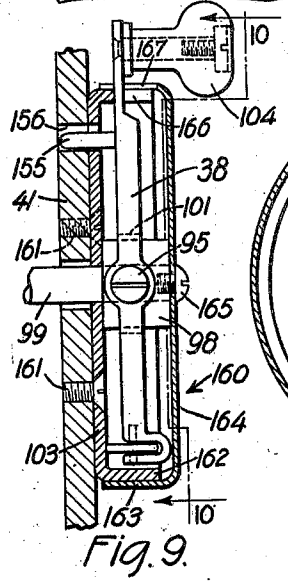

Fig. 9.

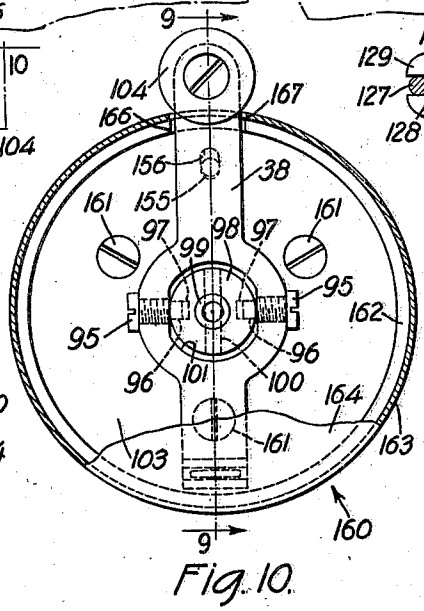

Fig. 10.

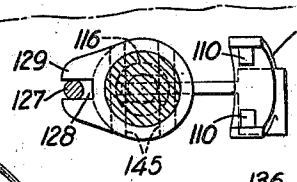

Fig. 11.

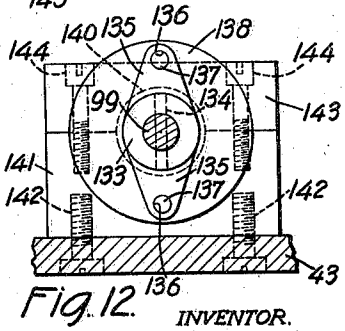

Fig. 12.

INVENTOR.
Charles A. Fuchs.
BY John Waldheim
ATTORNEY.

Aug. 23, 1938. C. A. FUCHS 2,127,507

PRINTING INSTRUMENTALITY FOR TYPEWRITING MACHINES

Filed Jan. 29, 1935 10 Sheets-Sheet 6

Fig. 13.

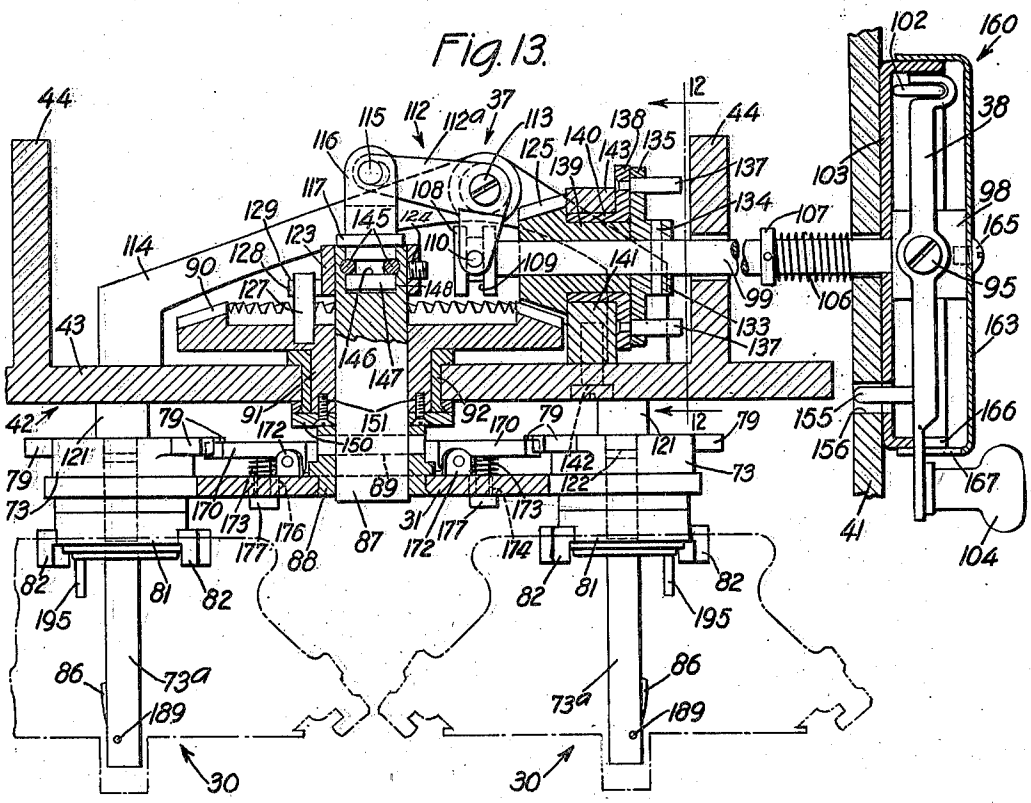

Fig. 14.

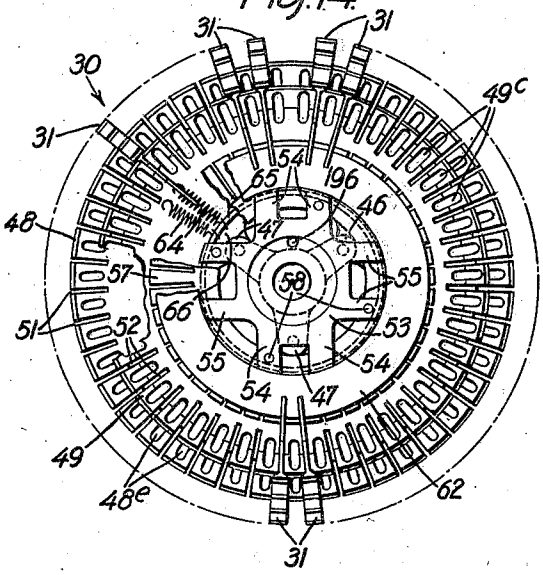

Fig. 15.

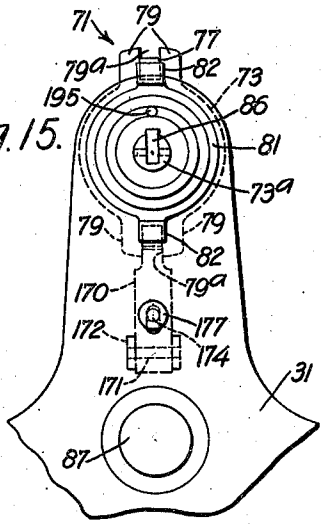

INVENTOR.
Charles A. Fuchs.
BY John Waldheim
ATTORNEY.

Aug. 23, 1938. C. A. FUCHS 2,127,507

PRINTING INSTRUMENTALITY FOR TYPEWRITING MACHINES

Filed Jan. 29, 1935 10 Sheets-Sheet 7

Fig. 16.

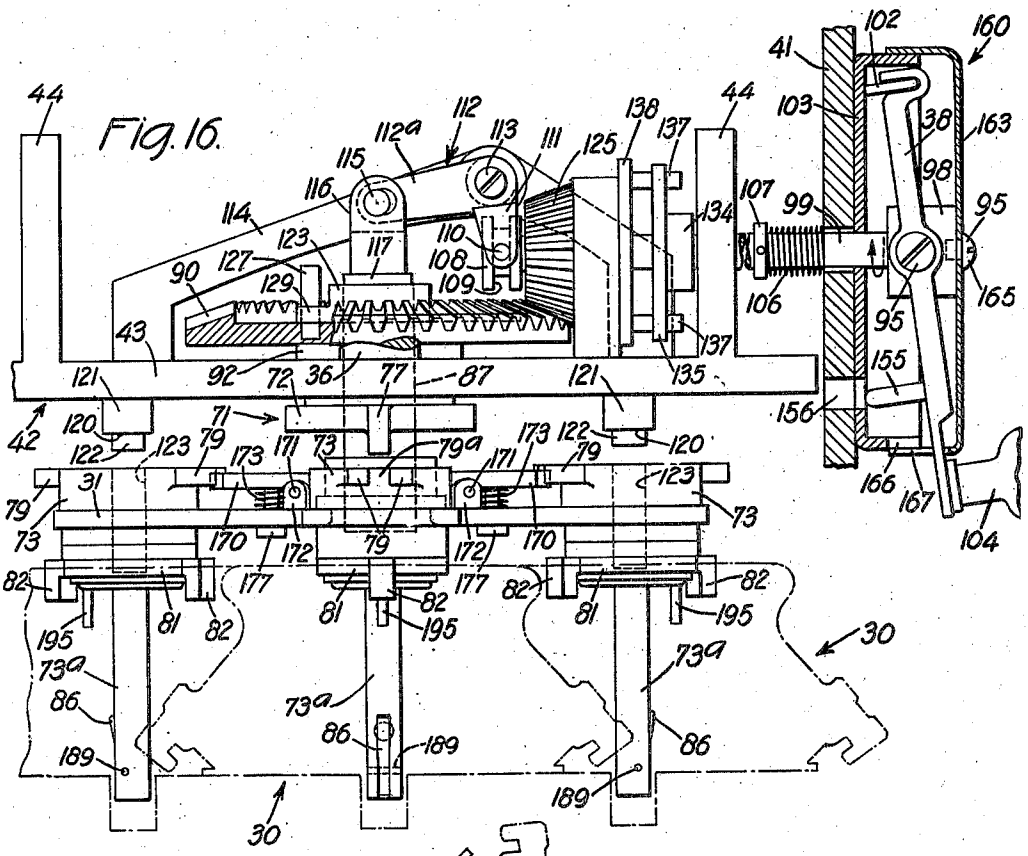

Fig. 17.

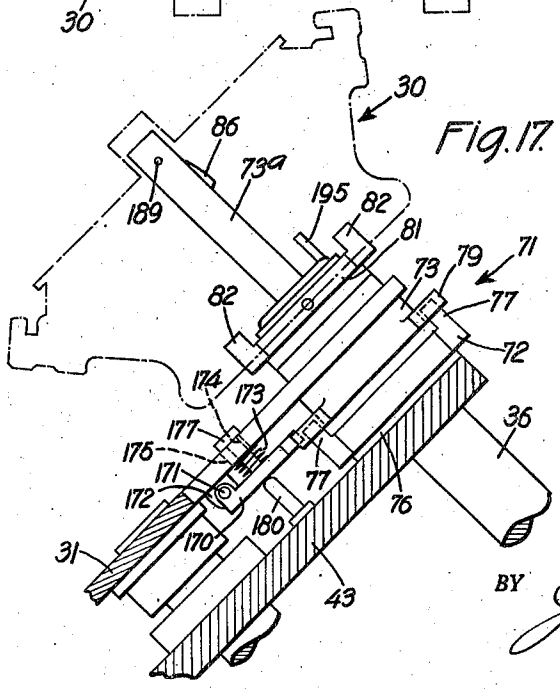

INVENTOR.
Charles A. Fuchs
BY
John Waldheim
ATTORNEY.

Aug. 23, 1938. C. A. FUCHS 2,127,507

PRINTING INSTRUMENTALITY FOR TYPEWRITING MACHINES

Filed Jan. 29, 1935 10 Sheets-Sheet 8

Fig. 18.

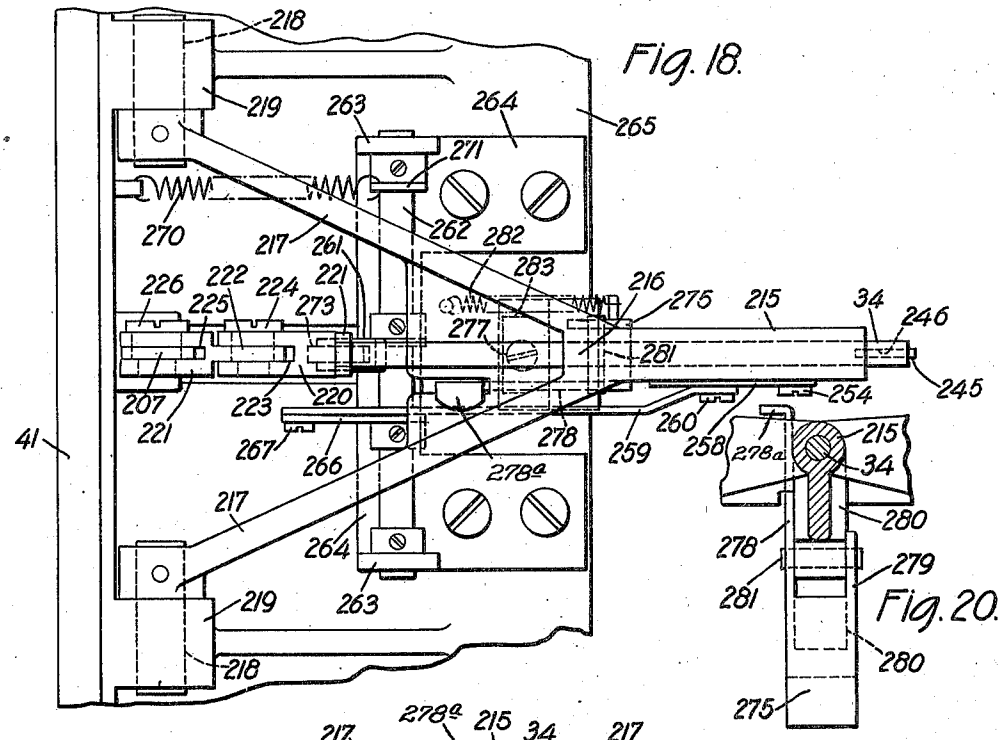

Fig. 20.

Fig. 19.

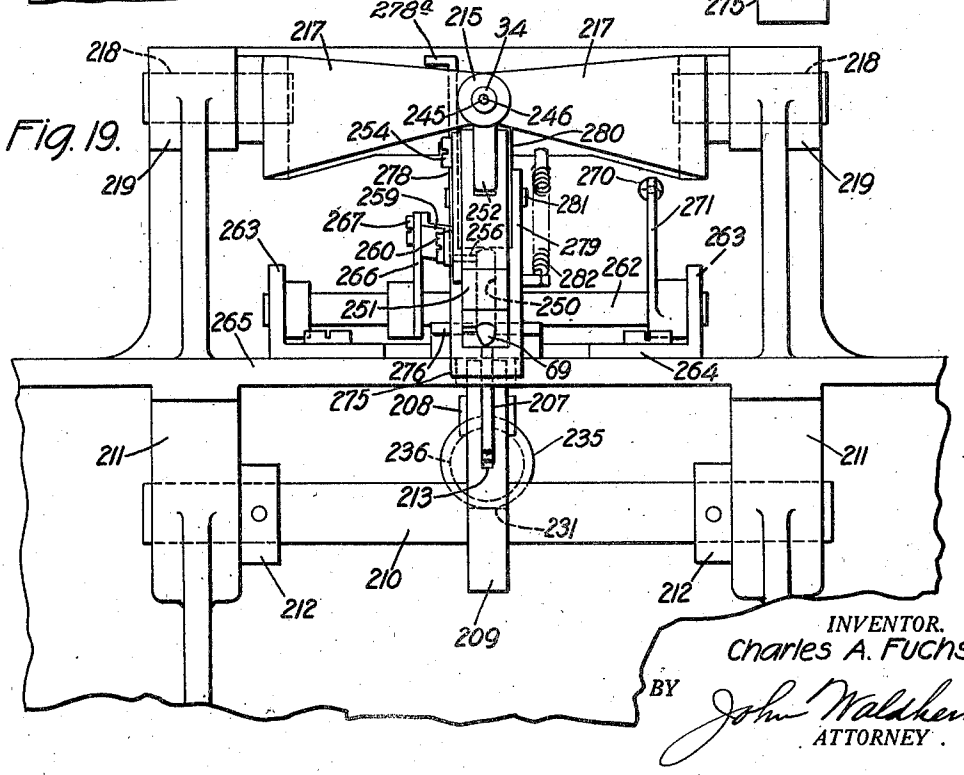

INVENTOR.
Charles A. Fuchs.
BY John Waldheim
ATTORNEY.

Aug. 23, 1938. C. A. FUCHS 2,127,507

PRINTING INSTRUMENTALITY FOR TYPEWRITING MACHINES

Filed Jan. 29, 1935 10 Sheets-Sheet 9

Fig. 21.

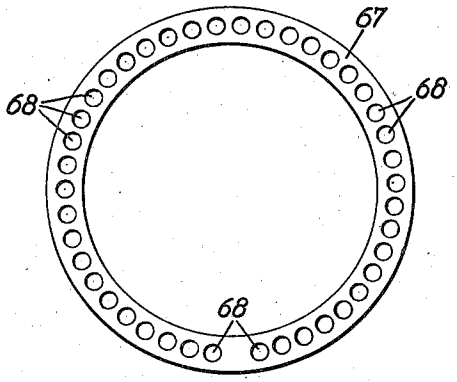

Fig. 22.

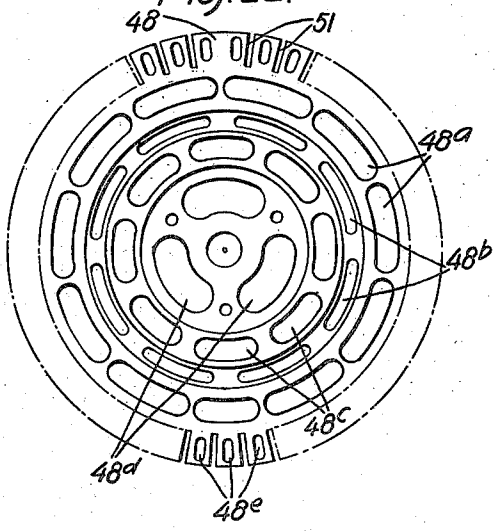

Fig. 23.

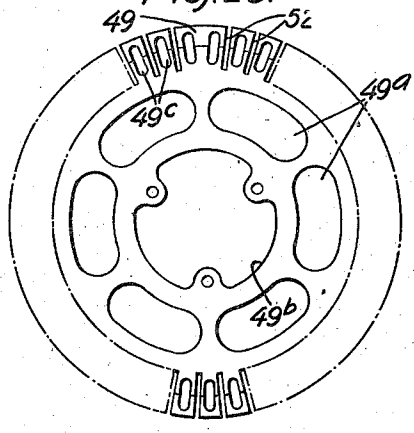

Fig. 24.

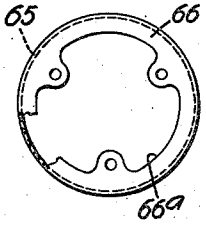

Fig. 25.

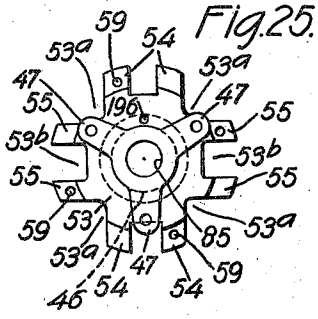

Fig. 26.

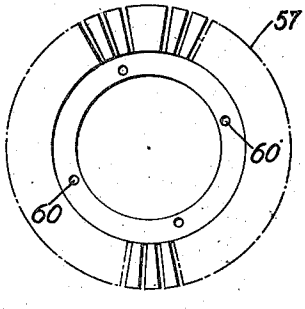

Fig. 27.

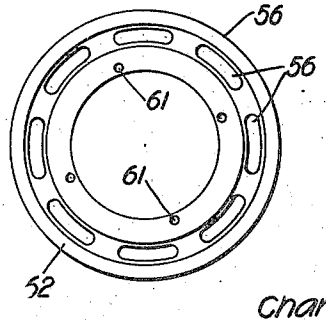

INVENTOR.
Charles A. Fuchs.

BY John Waldheim
ATTORNEY.

Aug. 23, 1938. C. A. FUCHS 2,127,507

PRINTING INSTRUMENTALITY FOR TYPEWRITING MACHINES

Filed Jan. 29, 1935 10 Sheets-Sheet 10

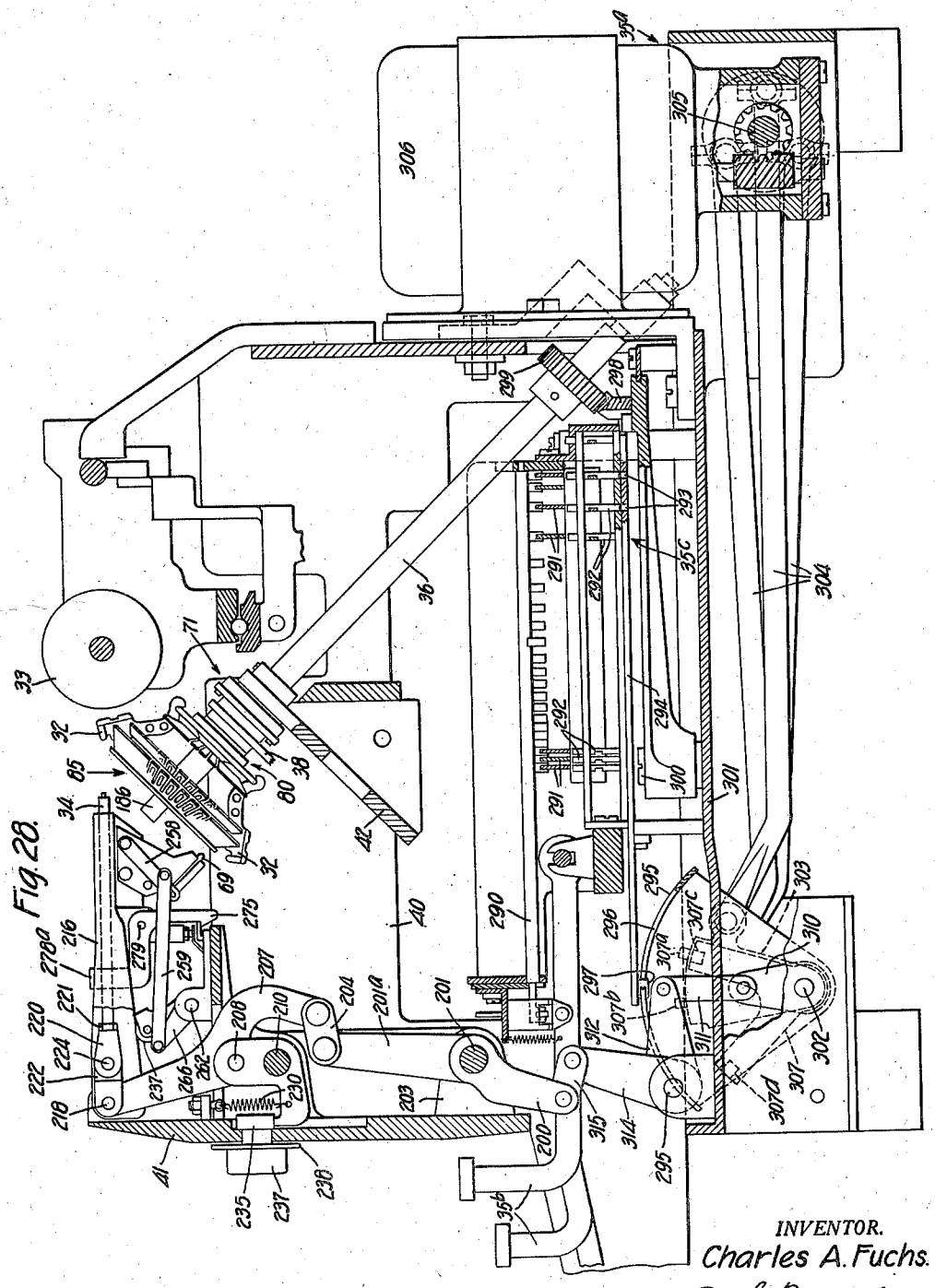

Fig. 28.

INVENTOR.
Charles A. Fuchs.
BY John Waldheim
ATTORNEYS.

Patented Aug. 23, 1938 2,127,507

UNITED STATES PATENT OFFICE

2,127,507

PRINTING INSTRUMENTALITY FOR TYPEWRITING MACHINES

Charles A. Fuchs, Hollis, N. Y., assignor, by mesne assignments, to Burnell Laboratory Company, Incorporated, Locust Valley, N. Y., a corporation of Delaware

Application January 29, 1935, Serial No. 3,909

76 Claims. (Cl. 197—53)

This invention relates improvements in typewriting machines of the kind illustrated in my application Serial No. 3,910 filed Jan. 29, 1935, and especially to improvements in printing instrumentalities therefor.

A feature of the invention relates to novel means to shift a support or turn table to render effective any one of a plurality of type sets carried thereby.

Another feature of the invention relates to means whereby the turn table is more firmly supported while in its normal position.

Another feature of the invention relates to means whereby the type sets, which are rotatably carried on their support, are held against accidental displacement while the support is being shifted. This is accomplished by locking the shafts or spindles to which the type sets are connected.

Another feature of the invention relates to means to permit the mounting of the type set on its spindle in only one position about its axis.

Another feature of the invention relates to novel means engaging the type bar carrier to align the type bars with the printing point.

Another feature relates to means whereby the type bar actuator is operated, and whereby the aligning means is also operated.

Another feature relates to means including a bracket whereby the type bar actuator and the aligning means are carried to an abnormal position to permit demounting and substitution of any one of the type sets.

Another feature relates to means including a latch to hold the bracket, which supports the type bar actuator, in its active position.

Another feature relates to means to prevent noise when the type bars are engaged by the actuator to operate them.

Another feature relates to novel adjusting means for the type bar actuator to compensate for the various thicknesses of paper.

Still another feature relates to means to prevent distortion of the type bar actuator in case the adjustment of the actuator does not correspond with the thickness of the work pack around the platen.

Further features of the invention relate to the structure of the type bar carrier.

Other features and advantages will hereinafter appear.

In the drawings, which form part of the specification:

Fig. 1 is a sectional side elevation of a portion of the machine;

Fig. 2 is a view, similar to Fig. 1, showing the type bar actuating mechanism and the aligning means operated;

Fig. 3 is a fragmentary, sectional side view showing a modified form of aligning means;

Fig. 4 shows the type bar actuating means operated under a condition in which the setting of the means which operates the type bar actuator does not correspond with the thickness of a work pack around the platen;

Fig. 5 is a fragmentary view showing the type bar swung to the platen through the medium of the resilient tip on the leading end of the type bar actuator and just before printing pressure is applied to the type bar;

Fig. 6 is a detail, sectional view of a portion of a type holder showing its latch actuated to render it ineffective prior to removing the type holder from the machine;

Fig. 7 is a view, similar to Fig. 1, showing the type bar actuator and the aligning plunger swung to an abnormal position to provide clearance space for the purpose of removing one of the type carriers;

Fig. 8 is a fragmentary, sectional view, taken on the line 8—8 of Fig. 1, showing the turn table and one of the type sets thereon;

Fig. 9 is a sectional view, taken on the line 9—9 of Fig. 10, and shows the handle and some of the connected parts of the type set selecting means;

Fig. 10 is an end view, partly in section, of the device shown in Fig. 9, the section being taken on the line 10—10 of Fig. 9;

Fig. 11 is a detail view showing a bell crank, of the mechanism which shifts the turn table shaft axially, and some parts associated therewith;

Fig. 12 is a detail, sectional view taken on the line 12—12 of Fig. 13;

Fig. 13 is a section view taken on the line 13—13 of Fig. 1, and shows the means for releasing and shifting the support for the type units, the actuating handle being shown in the plane of the section for the purpose of clearness, without disturbing the position of the parts controlled thereby;

Fig. 14 is a bottom plan view of one of the type carriers detached from the machine;

Fig. 15 is a plan view of a portion of one arm of the turn table and some of the devices carried thereby;

Fig. 16 is a view similar to Fig. 13 except that it is only partly in section and shows the turn table actuated to release it and disconnect the type unit from the type selecting means;

Fig. 17 is a fragmentary, sectional side view

illustrating how the type carrier becomes locked against rotation, after the turn table has been lifted slightly, and before the type carrier becomes disconnected from the type selecting means;

Fig. 18 is a fragmentary, top plan view showing the pivoted bracket which supports the type bar actuator and the aligning means, and the latch for holding the bracket in its effective position;

Fig. 19 is a fragmentary, sectional, rear view taken on the line 19—19 of Fig. 1 and shows the mechanism illustrated in Fig. 18;

Fig. 20 is a fragmentary, rear view of the latch and a portion of the type bar actuator bracket;

Fig. 21 is a top plan view of the perforated ring of the type aligning means;

Fig. 22 is a top plan view of the upper guide plate, for the type bars, of the type carrier;

Fig. 23 is a top plan view of the intermediate guide plate of the type carrier;

Fig. 24 is a top plan view of the anchorage plate for the type bar return springs;

Fig. 25 is a top plan view of the tubular body part of the type bar carrier;

Fig. 26 is a top plan view of the lower guide plate of the type bar carrier;

Fig. 27 is a top plan view of the type bar fulcrum plate of the type bar carrier; and

Fig. 28 is a skeleton side view, in section, of the machine.

Similar reference characters represent similar parts throughout the several views.

General description

A plurality of type carriers or units **30**, Figs. 1 and 8, are mounted on a support or turn table **31**. Each type carrier includes a set of type bars **32** pivotally supported on said carrier and operable, to print, through a ribbon **33a**, against a platen **33**, by an actuator or plunger **34**, of type bar actuating mechanism being indicated generally by the numeral **35**. This actuating mechanism is operable by suitable power means **35a** under the control of the key levers **35b**, the power means being hereinafter described and disclosed and claimed in my above mentioned copending application Number 3,910.

Each type bar carrier is circular and has its type bars **32** arranged radially to swing outwardly therefrom. The active type bar carrier **30**, or in other words, the one located in cooperative relation with the actuator **34**, may be rotated by type bar selecting mechanism **35c** including a drive shaft **36**, and also operable by the power means as in my above mentioned application, to locate the desired type bar **32** in juxtaposition at the printing point and in the path of the type bar actuator for actuation thereby to print.

A rapid change from one type set to another, for the purpose of printing with different styles of types as may be required, may be effected by type set selecting means indicated generally by the numeral **37**, Figs. 1 and 13, and which may include a lever **39** by which it may be controlled and operated to actuate the turn table **31** upon which the type sets are carried, and thus position any one of the type sets in cooperative relation with the shaft **36** of the type bar selecting means and with the actuator **34**. To provide for the use of an unlimited number of type sets each type bar carrier is demountably supported, in a manner hereinafter described, on the turn table **31**.

Main frame

The machine includes a main frame having side plates **40**, only one of which is shown, to the forward ends of which plates is attached a front plate **41** in any suitable manner. A cross-bar **42** extends between the side plates **40** and is suitably secured thereto. To this cross-bar, at the middle thereof, is secured a bracket **42** including a forwardly and downwardly inclined plate **43** from which two angular shaped flanges **44** extend rearwardly to the cross-bar **42** to which they are secured in any convenient manner.

Structure of type carrier

The shape of each type carrier resembles the frustrum of a cone. It includes a core or body part **46**, Figs. 1 and 25, having at its upper end, arms **47** to which are secured upper guide plates **48** and **49**, see Figs. 22 and 23 also, in any convenient manner as by screws **50**. The guide plates **48** and **49** are provided with radial slots **51** and **52** respectively in which the type bars are located to assist in guiding them to the printing point while being operated by the actuator **34**.

The lower end of the body part **46** is provided with a flange **53** having arms **54** and **55** to which arms is secured a fulcrum plate **56** and a lower guide plate **57**, see Figs. 1, 25, 26 and 27, in any suitable manner, as by rivets **58** which extend through holes **59**, **60** and **61** in the flange **53**, fulcrum plate **56** and guide plate **57**.

The fulcrum plate **56** has formed on its outer edge an annular bearing member **62**, which is substantially circular in cross-section, and engages in slots **63** of the type bars to serve as a fulcrum common to all the type bars of the set. The type bars are provided with return springs **64**, Figs. 1 and 14, connected at their outer ends to the type bars and extending inwardly therefrom towards the center of the type bar carrier, the inner ends of the springs being connected to a downwardly extending flange **65** of a plate **66**, see Fig. 24 also, secured between the guide plate **49** and the arms **47** of the core **46** as in Fig. 1. Each type unit further includes a ring **67**, Fig. 1, secured to the upper guide plate **48**, said ring having holes **68**, Fig. 21, in which a plunger **69**, of aligning means **70** hereinafter described, engages, as in Fig. 2, to accurately align the selected type bar with the printing point.

It will be understood that all of the parts of which the type bar carrier is constructed are composed of metal, and that in order to make the type carrier as light as possible, so as to keep at a minimum the weight to be set in motion and to be quickly arrested, most of the parts such as the upper guide plate **48**, intermediate guide plate **49**, spring anchorage plate and fulcrum plate **56** are perforated, the plate **48**, Fig. 22, being provided with perforations **48a**, **48b**, **48c**, **48d** and **48e**, the plate **49**, Fig. 23, with perforations **49a**, **49b** and **49c**, the plate **56**, Fig. 27, with perforations **56a** and the plate **66**, Fig. 24, with a perforation **66a**. To further keep the weight of the type carrier at a minimum the flange **53** of the core **47** is provided with cutouts **53a** and **53b**, see Fig. 25. The type bars **32** are also provided with holes **32a** to assist in reducing the weight of the type carrier to a minimum.

Type bar setting or selecting mechanism

As previously stated the drive shaft **36**, which is part of the type bar selecting mechanism, is rotated by the power means **35a** under the control of the key levers, and the extent of rotation of the type carrier to locate the selected type bar at the printing point is controlled also by the key levers. Connection of the drive shaft **36**

with a spindle or shaft 73a, upon which the type carrier is supported, is made through a coupling 71 including elements 72 and 73, Figs. 1, 2 and 16, said coupling being used for the purpose of connecting any one of the type carriers with the drive shaft in a manner hereinafter described.

The coupling element 72 is secured to the shaft 36 by a pin 74, Fig. 1, extending through a hub 75 of said coupling element. The hub engages in a bushing 76, driven into the plate 43 of bracket 42, to guide the shaft 36 at its upper end. Teeth 77 of the coupling element 72 engage in slots 79a, Figs. 1 and 15, between teeth 79 of the coupling element 73 to form a driving connection between the drive shaft 36 and type carrier shaft 73a, the coupling element 73 being formed on the lower end of shaft 73a.

Each type carrier 30 is demountably connected to its shaft 73a by a coupling 80 composed of a coupling element 81 having teeth 82 extending therefrom and between arms 54 which, it will be remembered, are formed on the flange 53 of the core 47, Figs. 1 and 25.

Thus by rotating the drive shaft 36 the type carrier connected therewith is rotated thereby through the same angular distance to position the type bar, corresponding to the actuated key lever, into the path of the type bar actuator 34 which then pushes the type bar to print against the platen 33.

Type set selecting (releasing of turn table and active type set)

Each type carrier 30 is mounted on its shaft 73a which extends through an aperture 85 of said type carrier, and is held against the coupling element 73 by a latch 86 at the upper end of the shaft 41, which latch may be actuated in a manner hereinafter prescribed for the purpose of demounting the carrier from its shaft for the purpose of substitution by another one having a style of types different from those of the other type carriers in the machine.

The turn table 31, of the type set selecting means 37, is rotatably supported by a shaft 87 to which it is secured through the medium of a bushing 88, see Fig. 13, fastened to said table, a pin 89 extending through said shaft and said bushing. The shaft 87 is supported on plate 43 of the bracket 42 and extends through a bevel gear 90 and a hub 91 thereof, said hub engaging in a bushing 92 secured to the plate 43.

The shaft 87 may be rotated by suitable means, connected to the gear 90 and hereinafter described, to rotate the turn table to render any one of the type sets effective. Prior to this rotative movement the shaft 87 is moved axially to lift the turn table 88, as in Fig. 16, to effect a disconnection of the active type set from the drive shaft 36. This axial movement of the turn table shaft 87 is effected by the lever 38, Fig. 13, which is pivotally supported by screws 95, see Figs. 10 and 13 also, threaded into opposite sides of said lever and having reduced ends 96 engaging in apertures 97 of a collar 98 secured to a shaft 99 by a pin 100, said lever having an aperture 101 in which the collar 98 is located.

The lever normally occupies a vertical position as in Figs. 9 and 10 but for convenience in illustrating and describing its operation it is shown as turned slightly from this vertical position, in Fig. 13, without effecting rotation of the shaft. In other words the starting position of the handle 38 in Fig. 13 is shown in a plane extending transversely of the machine and at right angles to the plane in which the plate 43 is located.

The lever 38 is provided at one end with a roller 102 bearing against a plate 103 and serves as a fulcrum for said lever when it is swung from the position in Fig. 13 to the position in Fig. 16 by means of a handle 104 at the opposite end of the lever 38. This operation of the lever 38 pulls the shaft 99 axially and rightwardly in Fig. 16 against the action of a return spring 106, said spring being coiled around said shaft and held between the side plate 41 and a collar 107 secured to the shaft 99. On the inner end of the shaft 99 is secured a collar 108 having a groove 109 into which extend two studs or rollers 110 one from each of arms 111, see Figs. 1, 11 and 16, of a bell crank 112, the bell crank 112 being pivotally supported by means of a stud 113 on a bracket 114 secured to the rear face of plate 43 of bracket 42.

Thus when the shaft 99 is moved rightwardly as above mentioned the bell crank 112 is swung in a counter-clockwise direction from the position in Fig. 13 to that of Fig. 16. The bell crank 112 includes another arm 112a connected by a stud 115 to a non-rotatable element 116, provided with a flange 117 to engage the rear end of the turn table shaft 87 to push the latter and thus shift the turn table axially from the position in Fig. 13 to that of Fig. 16 to move the coupling element 73 out of cooperative relation with the element 72 and thus disconnect the active one of the type carriers 30 from the drive shaft 36.

The turn table 31, in its normal position, rests on shoulders 120 of studs 121 secured to the plate 43 of bracket 42. These studs also have reduced ends 122 which engage in apertures in the lower ends of shafts 73a of the two idle type carriers 30 and they thus assist in preventing accidental rotative displacement of the turn table. It will be understood that by lifting the turn table to release the active type carrier from the drive shaft it is also released from the studs 121. The rightward motion of the shaft 99 may be arrested in any suitable manner as by a collar 123, Fig. 13, secured to the shaft 87 by a screw 124, said collar abutting against the gear 90 as in Fig. 16.

Type set selecting (rotation of turn table)

After the turn table and the type carrier have been released, as above described, the lever 38 is used as a crank to rotate the shaft 99 in either direction. If said shaft is rotated in the direction of arrow, Figs. 8 and 16, it rotates a bevel gear 125, connected thereto in a manner hereinafter described. The gear 125 drives the gear 90 in a counterclockwise direction, Fig. 8, through the medium of a pin 127, Figs. 11 and 13, secured to said gear 90 and extending into a slot 128 of an arm 129 on the collar 123 which, it will be remembered, is secured to the shaft 87, and to which shaft the turn table is secured by pin 89. The gear 90 is three times the diameter of the gear 125, and there are three equally spaced type carriers on the turn table. Thus it will be understood that it requires one revolution of the shaft 99 to rotate the turn table through one third of a revolution to carry the next type carrier into registration with the drive shaft 36 of the type selecting means. When this position is reached the turn table 31 is lowered to connect the selected type carrier with the drive shaft 36, through the medium of the coupling elements 72 and 73, and to rest it against the shoulders 120

of the studs 121, which studs also lock the table against rotation as previously described.

The gear 125 is connected to the shaft 99 so that the latter may be shifted axially independently of the gear without disturbing its driving connection with said gear. The connection is best shown in Figs. 12 and 13, and includes a collar 133 secured to the shaft 99 by a pin 134. Said collar has, extending outwardly therefrom, two arms 135 having holes 136 into which extend pins 137 from a disc 138. The disc 138 has a sleeve 140 whereby it is mounted on the hub 139 of gear 125 and it is secured to said gear by riveting the end of the hub 139. A split bearing including a base 141 secured to the bracket plate 43 by screws 142, and a cap 143 secured to the base 141 by screws 144, supports the inner end of the shaft 99 through the medium of the gear hub 139 and sleeve 140. Thus it will be understood that the pins 137 permit sliding of the shaft 99 to the positions in Figs. 13 and 16 without disturing the driving connection between said shaft 99 and the gear 125.

The connection between the turn table shaft 87 and its actuating element 116 includes two parallel pins 145, Figs. 11 and 13, extending through the shaft 87 and engaging in opposite portions of an annular groove 146 of an end 147 of the element 116, said end being cylindrical and engaging in an aperture 148 formed in the end of the turn table shaft 87. It will be understood that this connection permits the shaft to rotate with respect to the actuating element 116 which does not rotate, and that it enables the shaft 87 to be moved axially in opposite directions by the element 116.

The gear 90 is kept from moving downwardly and pressing against the gear 125, by a flange 150 which is secured to the end of the hub 91, of said gear, by screws 151. The flange 150 bears against the end of bushing 92 which, it will be remembered, is secured to the plate 43 of the turn table supporting bracket 42.

Means to hold the turn table in its raised position and to prevent lowering thereof until selected type set is registered with the drive shaft

The lever 38 of the type set selecting means has a pin 155 which normally engages in a slot 156, formed in the side plate 41, Figs. 9 and 10, while one of the type carriers is connected. Thus in order to rotate the shaft 99 by the lever 38 it is first necessary to swing the lever so as to withdraw the pin 155 from the slot 156 as in Fig. 16. The pin then rides on the face of a plate 103 to retain the lever 38 in its operated position until the pin is returned to the slot when the spring 106 acts to return the shaft 99, and the parts connected thereto, to normal position. It will be understood that in order to change from one type set to the next adjacent one it is merely necessary to actuate the lever 104 until the pin is out of the slot 156 and then rotate the shaft 99 by said lever until the pin reenters the slot 156. Thus the registering of the selected type set is done automatically by the pin 155, or in other words, without any attention on the part of the operative. Since there are only three type sets it requires only one revolution of the shaft 99 in one direction or the other to register either one of the two ineffective ones with the drive shaft.

Case for type set selecting lever

The lever 38 may be concealed within a flat cylindrical casing 160, Figs. 9 and 10, said casing being composed of the plate 103, which is secured to the side plate 41 of the machine frame by screws 161. The plate 103 has at its outer edge an upturned, circular flange 162 over which fits a flange 163 of a cover 164, which cover is secured to the end of the shaft 105 by a screw 165. The flanges 162 and 163 overlap each other sufficiently so as to still engage each other while the handle is in its operated position, Fig. 16. They are also provided with slots 166 and 167 respectively through which the lever 38 extends.

Means to lock type carriers while in their ineffective positions

It is important that the teeth 77 of the coupling element 72 register with the slot formed between the teeth 79 of the other coupling element 73 when a type carrier is brought to its selected position by the turn table. In other words there should be no displacement of the type carriers about the axes of their shafts while the turn table is being actuated. Accordingly there is provided for each type carrier 30 a locking pawl 170, Figs. 1, 8, 13, 15, 16 and 17, pivotally supported by a pin 171 on brackets 172 secured to the lower face of the turn table 31, the free end of said pawl engaging in the slot 79^a between the teeth 79 of the coupling element 73. A spring 173 is located between each pawl 170 and the turn table which tends to maintain the pawl in its effective position, the springs 173 being each supported on a pin 174 secured to the pawl and extending through a slot 176 in the turn table. Each pin has a head 177 to engage the upper face of the turn table and thus limit the movement of the pawl to its effective position, Fig. 17.

While the turn table is in its raised position all of the pawls 170 are effective, but while the table is being lowered to connect the selected type carrier with the drive shaft 36 the pawl of the selected type set is rendered ineffective so that the type carrier may be rotated freely by the said drive shaft. To this end there is secured to the plate 43, of the turn table supporting bracket, a pin 180, Fig. 17, with which the lower face of the pawl engages to swing said pawl about its pivot 170, against the action of its spring 173, and thus disengage said pawl from the coupling element 73 as in Fig. 1.

It will be understood, by an inspection of Fig. 17, that while the selected type set is being connected the coupling element is connected with the coupling element 73 before the pawl 170 is released from the coupling element 73. Similarly while the type set is being disconnected the pawl 170 is connected with the coupling element 73 before the latter is disengaged from the coupling element 72. Thus it will be understood that with this arrangement it is impossible to disturb the position of the type carrier about its axis while it is being connected to or disconnected from the drive shaft 36, or while it is in its ineffective position.

Demountable type sets

As previously stated each type carrier 30 is demountably supported on the table 31 by its shaft 73^a so that it or all of the type carriers may readily be replaced for another kind of work and each type carrier is held on its shaft by the latch 86 which engages the upper face of the guide plate 48 of the type carrier.

Preparatory to replacing one of the type carriers on its shaft the latch 86 is first rendered ineffective. To this end each type carrier is

provided with a cap-like push button 185, Figs. 1 and 6, having a narrow portion 186 which fits over the upper end of the shaft 73a, and an enlarged portion 187 in which there is contained a return spring 188. The lower end of the portion 186 engages the latch 86 to swing the latter about its pivot 189 while the push button 185 is being depressed, to carry the active end of the pawl clear of the plate 48, as in Fig. 6, against the action of a return spring 189a. The type carrier may then be removed from the upper end of the shaft 73a, as illustrated in Fig. 7, the type bar actuator 34 and the aligning means 70 having previously been moved out of the way, as illustrated, and in a manner hereinafter described.

The enlarged portion 187 of the push button 185 is contained within a housing 190, which is held in place by the screws 50, and which enlarged portion is normally held against the roof 191a of the housing, Fig. 1, by the spring 188 the lower end of said spring engaging upper face of the guide plate 48.

The latch 86 is contained in a slot 191, Figs. 1 and 8, of the shaft 73a to guide it to and from its effective position. The latch return spring 189a is contained within a hole 192 in the shaft 73a.

Means to insure correct positioning of each type set about the axis of its spindle

It is important that each type set 30 be properly positioned about the axis of its spindle or shaft 73a so that the type corresponding to the active key lever shall be brought to the printing position. To this end there is provided a pin 195, Figs. 1, 7, 8 and 15, which is secured to the coupling element 81 and enters an aperture 196, see Fig. 14 also, in the flange or coupling element 53. Since the pin 195 occupies a definite position on the coupling element 86 and the coupling element 53 has only one aperture, which bears a definite relation to the arrangement of the types about the axis of the type carrier, it will be understood that the type carrier 30 can be assembled in only one position on the shaft 73a about the axis of the latter.

In order to assemble the type carrier on the shaft it is slid over the shaft 73a until the bottom face of the coupling element 53 strikes the upper end of the pin 195. The type carrier is then rotated about the shaft until the aperture 196 registers with the pin 195. This is noticeable to the touch of the operative. The type carrier is then lowered to its connected position so that the teeth 82 of the coupling element 73 engage between the teeth 54 of the coupling element 53.

It will be understood that the teeth 54 are located with respect to the aperture 196 and the pin is located with respect to the teeth 82 so that the teeth 82 register with the slots between the teeth 54 when the pin 195 registers with the aperture 196. Thus when the type carrier is lowered the teeth 82 enter said slots.

It will also be understood that the pin 195 is of a sufficient length to keep the teeth 54 clear of the teeth 82 while the top of the pin 192 is in engagement with the bottom face of the coupling element 53 so as to enable the type carrier to be rotated freely about the shaft 41 while turning it to its proper position on said shaft.

Operating mechanism for type bar actuator

The type bar actuator 34 is caused to function at each depression of a key lever which controls suitable power means, hereinafter described, and disclosed in my above mentioned application, to press the selected type bar 32 against the platen 33 to print. The power means is connected at each depression of a key lever to operate an arm 200, Fig. 1, secured to a shaft 201 to rock the latter counter-clockwise, the shaft being supported in lugs 203 extending rearwardly from the front plate 41. Secured to the shaft 201 is an upwardly extending arm 201a which pulls forwardly a link 204, pivotally connected thereto by a headed rivet 205. The rear end of the link 204 is pivotally connected, by a headed rivet 206, to the lower end of a lever 207, the latter being pivotally supported by a stud 208, see Fig. 19 also, on an arm 209 secured to a rock shaft 210 supported in lugs 211 extending rearwardly from the front plate 41, said shaft being held against endwise movement by collars 212, the lever 207 being guided in a slot 213 of the arm 209. When the link 204 is pulled forwardly it rocks the lever 207 clockwise, about its pivot 208, to move the actuator 34 rearwardly and thus push the selected type bar against the platen as shown in Fig. 2.

The actuator 34 is in the form of a rod which is guided in a tubular portion 215 of a bracket 216, Figs. 1, 18 and 19, said bracket including two arms 217 by which it is pivotally supported on stub shafts 218 on lugs 219 on the front plate 41. The rod or actuator 34 is threaded into a block 220 for the purpose of adjusting its length and it is held in its adjusted position by a nut 221 which bears against the end of said block. The block 220 is connected to the lever 207 by a link 221, Figs. 1 and 18, which is provided with a narrow portion 222 engaging in a slot 223 of the block 220, a shouldered screw or rivet 224 connecting said link, at one end, with the block. The other end of the link 221 has a slot 225 into which extends the upper end of the lever 207 and a shouldered screw or rivet 226 connects this end of the link 221 with said lever 207. It will be understood that the link 222 connecting the lever 207 with the actuator 215 permits the actuation of the latter without binding in its guide 215, see Fig. 4. The power means reciprocates the rock shaft 201 through a complete cycle thus driving the type bar actuator 34 to the platen to print and then returning it to normal.

Adjustment of type bar actuator in accordance with thickness of work pack

The arm 209, which supports the lever 207 by which the type bar actuator 34 is operated, is normally held against movement by a spring 230 connected at one end to a nose 231 of said arm, the other end of said spring being connected to a screw 232 which extends through a lug 233 on the front plate 41 and is adjustable by a nut 234 to set the spring to the required strength. The nose 231 of the supporting arm 209 is held, by the spring 230, against an eccentric 235 formed on the end of a shaft 236 rotatably supported in the front plate 41. The forward end of the shaft 236 has secured thereto a finger-piece or wheel 237 by which the eccentric 235 may be rotated to thus set the arm 209 about the axis of the shaft 210 to swing the lever 207 back or forth about the stud 206 (point of connection with the link 204) and thereby set the actuator 34 so that its type bar engaging end may be moved closer to or farther away from the platen according to the thickness of the work pack around the platen. The finger-piece 237 is pro-

vided with a flange 238 upon the face of which are scale marks 239 to assist in setting the finger-piece relatively to a pointer 240 on the front plate 41. A spring pressed plunger 241 engages the flange 238 to prevent accidental displacement of the finger-piece and the connected eccentric 235.

The rock shaft 201, which is power driven, always moves through the same angular distance, as hereinafter described, when actuated. Consequently the type bar actuator moves always through the same linear distance although its starting position may vary in accordance with the setting of the eccentric which, it will be remembered, is set to correspond with the thickness of the work pack around the platen. Accordingly it would otherwise follow that if the operator changes from a thin work pack to an extremely thick one, and neglects to set the eccentric 235 accordingly, the actuator 34 and the several parts connected thereto, when operated, would be unduly strained which may result in buckling of the actuator 34 or bending of said connected parts. The spring 230 however prevents any injury to the machine, under such conditions, and the nose 231 simply leaves the eccentric, against the action of the spring 230, as shown in Fig. 4. This will produce heavier printing which, when noticed by the operator may be corrected by setting the eccentric to its proper position. It will be understood that the operation of the machine under this condition (eccentric adjusted for a thinner work pack than that around the platen) is as follows:—The type bar actuator is arrested with the type bar against the platen before the arm 201a reaches an extreme, forward position. The lever 207 is then, by the continued movement of the arm 201a, swung about the screw or pivot 226, at its upper end, thus carrying the stud 208 forwardly of the machine which causes the arm 209 to rock counter-clockwise about the axis of the shaft 210 against the action of the spring 230.

Means to prevent noise when actuator engages type bar

To prevent noise which may result from direct contact of the actuator 34 with the type bar when the latter is started towards the printing point, there is provided a resilient type bar engaging member 245, Fig. 1, which is herein shown as composed of rubber. This member is contained within an aperture 246 in the actuator 34 and protrudes slightly from its end so that while the actuator is being operated the member 245 receives the blow against the type bar and swings the latter against the work pack around the platen as in Fig. 5. After the type bar is in contact with the work pack the member 245 yields during further movement of the actuator 34. The end of the actuator 34, which is normally slightly behind the engaging end of the member 245, then engages the type bar to finally press it against the work pack on the platen as in Fig. 2. This mode of operation of the type bar is practically noiseless.

Actuating mechanism for type bar aligning means

The plunger or aligning pin 69 which is caused to enter the apertures 68 of the ring 67 on the type bar carrier, to align the corresponding type bar with the printing point, is slidingly supported in an aperture 250 of a bracket 251, Figs. 1 and 19, secured to a flange 252 of the actuator guide 216, by a screw 253 and a shouldered screw 254. The bracket has in one side thereof a slot 255 through which a pin 256 extends, from the aligning pin 69, and into a slot 257 of a lever 258 pivotally supported on the shouldered screw 254 and by which the lever 258, when actuated by a link 259, projects the aligning pin 69 into the hole 68 corresponding with the selected type bar, said link being pivotally connected to the lever 258 by a shouldered screw or rivet 260.

To actuate the link 259, and consequently the aligning pin 69, the lever 207, of the type bar actuating mechanism 35, actuates an arm 261, Figs. 1 and 18, to rock a shaft 262, see Fig. 19 also, to which said arm is secured, said shaft being supported in ears 263 of a bracket 264 secured to a shelf 265 on the front plate 41. Secured to the shaft 262 is another arm 266 which has connected to its upper end the link 259 by a shouldered screw or rivet 267. Thus it will be understood that when the rock shaft is actuated by the lever 207 the arm 266 thereon swings in a clockwise direction, Fig. 1, to push the link 259 rightwardly to swing the lever 258 in a counter-clockwise direction and thereby move the aligning pin 69 into the aperture 68 of the ring 67 on the type bar carrier 30 as in Fig. 2.

A return spring 270, connected at one end to the front plate 41, and at the other end to an arm 271 secured to the rock shaft 261 restores the aligning pin 69 and its connected parts to normal. A stop 272 of sound deadening material is secured to the bracket 251 and is engaged by the lever 258 to arrest it and its connected parts in normal. To prevent noise when the lever 207 actuates the arm 261 the latter is provided with a member 273 of sound deadening material to be engaged by the lever 207.

Swingable bracket for type bar actuator and the aligning means

By an inspection of Fig. 1, it will be seen that the type bar actuator 34 and the aligning pin 69 are normally in positions where they interfere with the removal of the type carrier. Therefore the bracket 216 is pivotally supported by the stub shafts 218 so that it may be swung up to the position in Fig. 7. At the same time the link 259 pulls idly forward on the arm 266 against the action of the spring 270. While the parts are in this position the type bar carrier 30 may be removed from its shaft or spindle 73a in a manner previously described.

It will be understood that the link 221, which connects the type bar actuator 34 with the lever 207, prevents binding of the actuator 34, in its guide 215, during its operation by the lever 207, and it also accommodates itself, while the type bar actuator supporting bracket 216 is being swung up, to a condition of disalignment of the point of connection 226 with the stub shafts 218, which disalignment may result from adjustment of the finger wheel 237.

Latch for swingable type actuator bar bracket

To assist in expediting the operation of the machine provision is made for quickly releasing the bracket 216 when it is to be swung to its abnormal position. To this end there is pivotally supported on the bracket 216 a latch 275, Figs. 1, 18, 19 and 20, which normally engages a keeper 276 secured to the shelf 265 by a screw 277. The latch has two arms, 278 and 279, which extend upwardly therefrom and on opposite sides of a lug 280 of the bracket 216, a stub shaft 281 passing

through said arms 278 and 279 and through the lug 280 to pivotally support said latch.

The arm 278 has at its upper end a finger-piece 278a which may be depressed to swing the latch counter-clockwise about the pivot 281 against the action of a return spring 282 to disengage it from the keeper 276. A flat spring 283, the free end of which engages a set screw 284 in the lug 280, then acts to swing the bracket 216 slightly upwardly. The bracket 216 may then be swung to the position in Fig. 7. The principal object of the spring 283 is to hold the latch 275 up against the lower face of the keeper 276 and thus maintain the type bar actuator 34 at the proper level. It will be seen that there is a slight space between the free end of the spring 283 and the keeper 276. This permits the bracket 216 to swing downwardly sufficiently to enable the engaging portion of the latch 275 to swing freely under the keeper.

The type bar selecting or setting mechanism includes a fulcrum lever, a series of rock shafts 290, one for each key lever 35b, and operable about their axes by the actuation of their associated key levers. The rock shafts actuate transversely disposed bars 291, one at a time, to depress any one of a series of normally ineffective fulcrum pins 292 and set it into a corresponding aperture 293 in a lever 294. The lever 294 is then actuated, about the set fulcrum pin, by a power operated cam 295 provided with a slot 296 in which a follower 297, on the lever 294, engages. The rear end of the lever 294 is connected with a gear sector 298 which, when actuated, drives a gear 299 secured to the shaft 36 to rotate the latter to locate the selected type bar at the printing point, said sector being pivotally supported by a stud 300 supported on a base plate 301.

The cam 295 is normally at rest in the position shown in Fig. 28 but may be actuated clockwise or counter-clockwise to rock a shaft 302 to which the cam is secured, in the same direction from its normal position and also return it to its normal position.

To thus actuate the rock shaft 302, continually reciprocating elements 303 are provided which are loose on the shaft 302, each being connected by a rod 304 with a continually rotating crank shaft 305 driven by a motor 306. Each reciprocating element has associated therewith a cooperative element 307 which may be connected by either one of two pawls 307a and 307b with the corresponding reciprocating element, said pawls being adapted to engage one at a time, in notches 307c and 307d respectively of the elements 307. The actuation of any one of the pawls 307a or 307b is effected by means (not shown) under the control of the key levers, but fully disclosed in my above mentioned application. The cooperating elements 307 are all secured to the shaft 302 and consequently when any one of them is actuated the cam 295 is also actuated and always through the same angular distance.

To actuate the type bar actuator 43 by the power means there is secured to the shaft 302 an arm 310 connected by a link 311 to an arm 312 secured to a rock shaft 313, said rock shaft having rigid thereon another arm 314 which is connected to the arm 200 by a link 315. Thus when the shaft 302 is rocked in either direction, from the position in Fig. 28, the shaft 201 is rocked always the same extent and always in the one and same direction, through the medium of the train of mechanism connecting it with the rock shaft 302.

Modified form of actuating means for aligning device

In Fig. 3 there is shown a modified form of mechanism for actuating the aligning pin 69, which mechanism is carried entirely by the bracket 216. The parts which are identical with those of Fig. 1 bear the same reference characters with the superscript *a*.

In this form of the invention the link or rod 259a which actuates the lever 258a is slidingly supported, at its forward end, in a bracket 285 secured to the bracket 216. While the lever 207a is being operated an ear 286 thereon engages the member 273a, of sound deadening material, on the end of link 259a, to push the latter rearwardly against the action of return spring 270a to actuate the aligning pin 69 through the medium of the lever 258a. It will be understood that since the link 259a and the spring 270a are supported entirely by the bracket 216 that the entire actuating mechanism for the pin 69 may be swung upwardly with the bracket 216.

Brief description of operation

On the type bar carrier 30 there are forty two type bars 32, one for each of the key levers, not shown. When any one of the key levers is depressed it sets up a condition which determines the angular distance through which the shaft 36 is to be rotated to locate the corresponding type bar in the path of the type bar actuator for printing against the platen 33, the shaft 36 being rotated by suitable power means, not shown. While the type bar carrier is being rotated, to juxtapose the selected type bar with respect to the printing point, the rock shaft 210, Fig. 1, is also operated by the power means to move the type bar actuator 34 towards the platen. After the type bar carrier is arrested in its operated position, and just prior to the engagement of the selected type bar by the actuator, the aligning pin 69 is actuated through the medium of lever 207 and actuating mechanism including the elements 271, 261, 259 and 258 to cause said pin to enter the aperture 68 diametrically opposite the selected type bar to accurately register or align the latter with respect to the printing of the platen. The actuator 34 then moves on to press the type bar against the platen. After the type bar reaches the platen the resilient member 245 yields and the end of the actuator 34 then engages the type bar directly to press the type bar against the platen.

If, during the course of typing it is desired to type with another style of types, or in other words with the types of any one of the other type sets on the machine, the type set selecting lever 38, Fig. 13, is actuated to the position in Fig. 16 thus pulling the shaft 99 rightwardly to actuate the bell crank 112 counter-clockwise to push the shaft 87 forwardly. This axial movement of the shaft 87 moves the turn table 31 away from the plate 43 of the bracket 42 and thus disconnects the coupling element 73 from the driving coupling element 72 as in Fig. 16 and also disconnects the two idle type sets from the studs 121.

After the disconnection of all of the type carriers the turn table may be rotated in one direction or the other, according to the type set to be rendered effective, by using the lever 38 as a crank to rotate the shaft 99 and thus rotate the gear 125 through the medium of elements 135, 137 and 138. The gear 125 rotates gear 90, the

latter rotating the shaft 87, to which the turn table is secured, through the medium of pin 127 and element 123. After the lever 38 has been rotated through one revolution the selected type set registers with the drive shaft 36 and the pin 155 of the lever 38 may then drop into the aperture 156 under the influence of spring 106. When this occurs the shaft 105 moves leftwardly from the position in Fig. 16 to the position in Fig. 13 thus connecting the coupling elements 72 and 73 to connect the selected type set with the shaft 36.

Should a style of type be desired which differs from the styles of those type sets in the machine any one of the type carriers 30 may readily be removed from its spindle by first bringing it to a convenient position, in register with the drive shaft 36, and then pressing on the button 185, as in Fig. 6, to swing the pawl 86 to its ineffective position and the type bar carrier may then be drawn upwardly on the spindle 73a and removed therefrom, care being taken to hold the push button depressed until the plate 48 is clear of the pawl 86 with which plate the pawl normally engages to lock the type carrier axially on its spindle, the bracket 216 which carries the type bar actuator and the aligning pin 69 having previously been swung about its pivot 218 from its position in Fig. 1 to the position in Fig. 7, to carry the type bar actuator 34 and the aligning pin 69 clear of the path.

Having thus described the invention it will be understood that changes in the form, arrangements, proportions, sizes and details thereof may be resorted to without departing from the scope of the invention as defined in the appended claims.

I claim:

1. In a typewriting machine, the combination of printing instrumentalities including a plurality of type carriers, a turn table to support said carriers, a stationary bracket, a shaft to rotatably support the turn table on said bracket and at one side thereof, and means to engage the shaft at the opposite side of said bracket to selectively position any one of the type carriers in its active position.

2. In a typewriting machine, the combination of printing instrumentalities including a plurality of type carriers, a turn table to support said carriers, driving means to rotate any one of said carriers on its support, a stationary bracket, a shaft to rotatably support the turn table on said bracket and at one side thereof, and means to engage the shaft at the opposite side of said bracket to selectively position any one of the type carriers in cooperative relation with the driving means.

3. In a typewriting machine, the combination of printing instrumentalities including a plurality of type fonts, a turn table, rotatable means for supporting each type font on the turn table, a fixed bracket, actuating means on said bracket to cooperate with any one of the rotatable means, a shaft to support the turn table on said bracket and at one side thereof, and means arranged at the opposite side of said bracket to rotate the turn table shaft to position any one of the type fonts with its rotatable means in cooperative relation with the actuating means.

4. In a typewriting machine, the combination of a turn table, printing instrumentalities including a plurality of type sets, means to rotatably support each type set on the turn table and at one side thereof, type selecting means at the opposite side of the turn table to cooperate with any one of said type sets one at a time to position the desired type for printing, and type set selecting means also located at said opposite side of the turn table to position any one of the type sets in cooperative relation with the type selecting means.

5. In a typewriting machine, the combination of printing instrumentalities including a plurality of type sets, a turn table, means to rotatably support each type set on said table, type selecting means to rotate said type sets one at a time, means to rotatably support the turn table, actuating means, means connected to the turn table supporting means to rotate the turn table, and means independent of the turn table supporting means to cooperate with the actuating means in locating any one of the type sets with respect to the type selecting means.

6. In a typewriting machine, the combination of a turn table, printing instrumentalities including a plurality of type sets, means to rotatably support each type set on said turn table, type selecting means to rotate said type sets one at a time, means to rotatably support the turn table, said type sets being spaced equi-angular distances from each other with respect to the axis of the turn table supporting means, rotatable actuating means connected to the turn table supporting means to carry any one of the type sets into cooperative relation with the type selecting means, and means independent of the turn table supporting means and cooperating with the actuating means to locate the type sets one at a time in alignment with the type selecting means.

7. In a typewriting machine, the combination of a support, printing instrumentalities including a plurality of type sets, means to rotatably carry each type set on said support and at the upper side thereof, type selecting means at the opposite side of said support to cooperate with any one of said type sets one at a time, and type set selecting means to shift said support to carry the desired type set into cooperative relation with said type selecting means.

8. In a typewriting machine, the combination of printing instrumentalities including a plurality of type sets, type selecting means to rotate said type sets one at a time, a support for said type sets, means to rotatably carry each type set on said support, means to shift said support to carry any one of the type sets into cooperative relation with the type selecting means, and means independent of the type set support to cooperate with the shifting means in locating the desired type set at the type selecting means.

9. In a typewriting machine, the combination of printing instrumentalities including a plurality of type sets, a support, means to rotatably carry each type set on said support, a fixed bracket, a shaft to rotatably support said support on said bracket, the axis of said shaft being disposed in a vertical plane extending fore-and-aft of the machine, and type set selecting means for said shaft extending at right angles to said shaft to one side of the machine.

10. In a typewriting machine, the combination of printing instrumentalities including a plurality of type sets, a support, means to rotatably carry each type set on said support, a fixed bracket, a shaft to rotatably support said support on said bracket, intermediate means extending at right angles to the axis of the said shaft, and means at the distal end of said intermediate means to actuate it.

11. In a typewriting machine, the combination of printing instrumentalities including a plurality of type sets, a support, means to rotatably carry each type set on said support, type selecting means to rotate said type sets one at a time, and type set selecting means, the latter including a shaft connected to actuate said support to shift it, a counter-shaft, means operable by said counter-shaft to actuate said shaft axially to operate said support to thus disconnect the active type set from the type selecting means, and means operable by said counter-shaft to rotate said shaft to shift said support after the type set has been disconnected to carry the selected type set to the type selecting means.

12. In a typewriting machine, the combination of printing instrumentalities including a plurality of type sets, a turn table, means to rotatably carry each type set on said turn table, type selecting means to rotate said type sets one at a time, and type set selecting means, the latter including a shaft connected to rotate said turn table to shift it, a counter-shaft, means operable by said counter-shaft to actuate said shaft axially to lift said support to thus disconnect the active type set from the type selecting means, and means operable by said counter-shaft to rotate said shaft and the turn table after the type set has been disconnected to carry the selected type set to the type selecting means.

13. In a typewriting machine, the combination of printing instrumentalities including a plurality of type sets, a support, means to rotatably carry each type set on said support, type selecting means to rotate said type sets one at a time, and type set selecting means, the latter including a shaft connected to actuate said support to shift it, a counter-shaft, means to rotate the counter-shaft, means to move said counter-shaft axially, means operable by the counter-shaft when moved axially to move said shaft axially to thereby actuate the support to thus disconnect the active type set from the type selecting means, and means operable by said counter-shaft when rotated to rotate said shaft to shift said support and thus carry a selected type carrier into cooperative relation with said type selecting means.

14. In a typewriting machine, the combination of printing instrumentalities including a rotatable type carrier, actuating means including a shaft to rotate said type carrier, a coupling including a plurality of members on the actuating means, and a plurality of cooperating members on the type carrier to permit said type carrier to be demountably connected with the actuating means, means to centralize the type carrier with respect to the actuating means, and means to prevent the coupling members from engaging each other except in one position of the type carrier about the axis of said shaft.

15. In a typewriting machine, the combination of printing instrumentalities including a rotatable type carrier, actuating means including a shaft to rotate said type carrier, a coupling including a plurality of members on the actuating means, and a plurality of cooperating members on the type carrier to permit said type carrier to be demountably connected with the actuating means, means to centralize the type carrier with respect to the actuating means, means to prevent the coupling members from engaging each other except in one position of the type carrier about the axis of said shaft, and means to prevent accidental axial displacement of the type carrier.

16. In a typewriting machine, the combination of printing instrumentalities including a plurality of individual type sets, a support, means to rotatably carry each type set on said support, type selecting means to rotate any one of the type sets, type set selecting means to shift said support to carry any one of the type sets into cooperative relation with said type selecting means, and means to lock the type sets against rotation about their axes while they are in transit during a type carrier selecting operation.

17. In a typewriting machine, the combination of printing instrumentalities including a plurality of individual type sets, a support, means to rotatably carry each type set on said support, type selecting means to rotate any one of the type sets, type set selecting means to shift said support to carry any one of the type sets into cooperative relation with said type selecting means, means to lock the type sets against rotation about their axes while they are in transit during a type carrier selecting operation, and means to release the selected type carrier from the locking means.

18. In a typewriting machine, the combination of printing instrumentalities including a plurality of individual type sets, a support, a shaft for each type set by which each is rotatably carried on said support, type selecting means to rotate any one of the type carriers one at a time, type set selecting means to shift said support to carry any one of the type sets into cooperative relation with said type selecting means, locking pawls one for each type carrier, and a member on each shaft to be engaged each by one of the locking pawls to prevent accidental rotation of the type carriers about the axes of their shafts while the type carriers are in transit during a shifting operation of said support.

19. In a typewriting machine, the combination of printing instrumentalities including a plurality of individual type sets, a support, a shaft for each type set by which each is rotatably carried on said support, type selecting means to rotate any one of the type carriers one at a time, type set selecting means to shift said support to carry any one of the type sets into cooperative relation with said type selecting means, locking pawls one for each type carrier, a member on each shaft to be engaged each by one of the locking pawls to prevent accidental rotation of the type carriers about the axes of their shafts while the type carriers are in transit during a shifting operation of said support, and means to actuate the locking pawl of the selected type set to disengage it from the member of the shaft which carries the selected type set.

20. In a typewriting machine, the combination of printing instrumentalities including a plurality of individual type sets, a support, a shaft for each type set by which each is rotatably carried on said support, type selecting means to rotate any one of the type carriers one at a time, type set selecting means to shift said support to carry any one of the type sets into cooperative relation with said type selecting means, locking pawls one for each type carrier, a member on each shaft to be engaged each by one of the locking pawls to prevent accidental rotation of the type carriers about the axes of their shafts while the type carriers are in transit during a shifting operation of said support, means to actuate the locking pawl of the selected type set to disengage it from the member of the shaft which carries the selected type set, means to discon-

nect the shaft of the active type set from the type selecting means, and means to render the locking pawl effective while the active type set is being disconnected.

21. In a typewriting machine, the combination of printing instrumentalities including a plurality of individual type sets, a support, means to rotatably carry each type set on said support, type selecting means to rotate any one of the type sets, type set selecting means to shift said support to carry any one of the type sets into cooperative relation with said type selecting means, means to lock the type sets against rotation about their axes while they are in transit during a type carrier selecting operation, means to release the selected type carrier from the locking means, means to disconnect the active type set from the type selecting means, and means to render the locking means effective to lock the active type set while it is being disconnected.

22. In a typewriting machine, the combination of printing instrumentalities including a plurality of individual type sets, a turn table, means to rotatably carry each type set on said turn table, type selecting means to rotate any one of the type sets, type set selecting means to rotate said turn table to carry any one of the type sets into cooperative relation with said type selecting means, and means to lock the type sets against rotation about their axes while the turn table is being rotated.

23. In a typewriting machine, the combination of printing instrumentalities including a plurality of individual type sets, a turn table, means to rotatably carry each type set on said turn table, type selecting means to rotate any one of the type sets, type set selecting means to rotate said turn table to carry any one of the type sets into cooperative relation with said type selecting means, means to lock the type sets against rotation about their axes while the turn table is being rotated, means to move said turn table axially, and means effective during said axial movement to effect a release of the selected type carrier from the locking means.

24. In a typewriting machine, the combination of printing instrumentalities including a plurality of individual type sets, a turn table, a shaft for each type set by which each is rotatably carried on said turn table, type selecting means to rotate any one of the type carriers one at a time, type set selecting means to rotate said turn table to carry any one of the type sets into cooperative relation with said type selecting means, locking pawls on said turn table one for each type carrier, and a member on each shaft to be engaged each by one of the locking pawls to prevent accidental rotation of the type carriers about the axes of their shafts while the type carriers are in transit during the rotation of said turn table.

25. In a typewriting machine, the combination of printing instrumentalities including a plurality of individual type sets, a turn table, means to rotatably carry each type set on said turn table, type selecting means to rotate any one of the type sets, type set selecting means to rotate said turn table to carry any one of the type sets into cooperative relation with said type selecting means, means to lock the type sets against rotation about their axes while the turn table is being rotated, a fixed bracket to support said turn table, means to move said turn table towards and away from said bracket, and a device on said bracket to actuate the pawl of the selected type set while the turn table is being moved towards said bracket to render said pawl ineffective to release the selected type carrier.

26. In a typewriting machine, the combination of printing instrumentalities including a plurality of individual type sets, a turn table, means to rotatably carry each type set on said turn table, type selecting means to rotate any one of the type sets, type set selecting means to rotate said turn table to carry any one of the type sets into cooperative relation with said type selecting means, means to lock the type sets against rotation about their axes while the turn table is being rotated, a pivot for said turn table, means to move said turn table axially of its pivot to cause the selected type set to engage the type selecting means, and a device to actuate the pawl of the selected type set while the turn table is being moved axially to thus release the selected type set from its locking pawl.

27. In a typewriting machine, the combination of printing instrumentalities including a plurality of type sets, a support, means to rotatably carry each type set on said support, type selecting means to rotate said type sets one at a time, and type set selecting means, the latter including a shaft connected to actuate said support to shift it, a counter-shaft, means operable by said counter-shaft to actuate said shaft axially to operate said support to thus disconnect the active type set from the type selecting means, means operable by said counter-shaft to rotate said shaft to shift said support after the type set has been disconnected to carry the selected type set to the type selecting means, and means to lock the type sets against rotation about their axes while said support is being shifted.

28. In a typewriting machine, the combination of printing instrumentalities including a plurality of type sets, a turn table, means to rotatably carry each type set on said turn table, type selecting means to rotate said type sets one at a time, and type set selecting means, the latter including a shaft connected to rotate said turn table to shift it, a counter-shaft, means operable by said counter-shaft to actuate said shaft axially to lift said support to thus disconnect the active type set from the type selecting means, means operable by said counter-shaft to rotate said shaft and the turn table after the type set has been disconnected to carry the selected type set to the type selecting means, and means on said turn table to lock said type sets against rotation about their axes while the turn table is being rotated.

29. In a typewriting machine, the combination of printing instrumentalities including a plurality of type sets, a support, means to rotatably carry each type set on said support, type selecting means to rotate said type sets one at a time, and type set selecting means, the latter including a shaft connected to actuate said support to shift it, a counter-shaft, means to rotate the counter-shaft, means to move said counter-shaft axially, means operable by the counter-shaft when moved axially to move said shaft axially to thereby actuate the support to thus disconnect the active type set from the type selecting means, and means operable by said counter-shaft when rotated to rotate said shaft to shift said support and thus carry a selected type carrier into cooperative relation with said type selecting means, locking means for said type sets to prevent rotation thereof, means to actuate the locking means while the active type set is being disconnected from the type selecting means to lock the last named type set, and means to actuate the locking

means to release the type carrier while it is being connected with the type selecting means.

30. In a typewriting machine, the combination of printing instrumentalities including a plurality of type sets, a support for said type sets, type selecting means to actuate any one of said type sets individually, and type set selecting means including a shaft, and a lever by which the said shaft may be moved axially to operate said support and thus disconnect the active type carrier from the type selecting means, said lever being also effective to rotate said shaft to shift said support to carry the desired type carrier to the type selecting means.

31. In a typewriting machine, the combination of printing instrumentalities including a plurality of type sets, a support for said type sets, type selecting means to actuate any one of said type sets individually, type set selecting means including a shaft, and a lever by which the said shaft may be moved axially to operate said support and thus disconnect the active type carrier from the type selecting means, said lever being also effective to rotate said shaft to shift said support to carry the desired type carrier to the type selecting means, and means to retain the support in its axially operated position while it is being shifted.

32. In a typewriting machine, the combination of printing instrumentalities including a plurality of type sets, a support for said type sets, type selecting means to actuate any one of said type sets individually, type set selecting means including a shaft, and a lever by which the said shaft may be moved axially to operate said support and thus disconnect the active type carrier from the type selecting means, said lever being also effective to rotate said shaft to shift said support to carry the desired type carrier to the type selecting means, a member on said lever to retain the support in its axially operated position while the shaft is being rotated by said lever, and a means including an aperture therein into which said member may move when one of the type sets is in register with the type selecting means so as to effect a connection of the registered type set with the type selecting means.

33. In a typewriting machine, the combination of printing instrumentalities including a plurality of type sets, a support, means to rotatably carry each type set on said support, type selecting means to rotate said type sets one at a time, and type set selecting means, the latter including a shaft connected to actuate said support to shift it, a counter-shaft, means to actuate said counter-shaft axially, a bell crank connecting said counter-shaft to said shaft to move the later axially and thus actuate said support to disconnect the active type set from the type selecting means, the actuating means being also effective to rotate said counter-shaft, and means whereby said shaft may be rotated by said counter-shaft to shift said support and thus carry another one of the type sets to the type selecting means.

34. A type carrier for a typewriting machine, said carrier including a hollow central portion to permit mounting on a spindle in the machine, two circular plates one at each end of said central portion, and type bars, said type bars being pivotally supported on one of said plates and guided by the other one of said plates.

35. A type carrier for a typewriting machine, said carrier including a hollow post-like member, a flange at one end of said member, a circular fulcrum plate on said flange, type bars pivotally supported on said plate, a guide plate for said type bars located near said fulcrum plate, and a guide plate for the free ends of said type bars, the last mentioned guide plate being secured to the other end of said post-like member.

36. A type carrier for a typewriting machine, said carrier including a hollow central portion to permit mounting on a spindle in the machine, two circular plates one at each end of said central portion, type bars, said type bars being pivotally supported on one of said plates and guided by the other one of said plates, return springs for said type bars, and a plate to which the ends of said springs are connected, the last mentioned plate being located at the end of said central portion at which the guide plate is located.

37. A type unit for a typewriting machine, said unit being shaped like a frustrum of a cone, a fulcrum plate at the narrow end of the type unit, type bars pivotally supported on the outer edge of said fulcrum plate, a post-like member extending from the center of said fulcrum plate, and a circular plate at the other end of said member, said circular plate having radial slots extending thereinto from its outer edge to guide said type bars.

38. A type carrier for a typewriting machine, said carrier including a hollow central portion to permit mounting on a spindle in the machine, two circular plates one at each end of said central portion, type bars, said type bars being pivotally supported on one of said plates and guided by the other one of said plates, and a perforated ring on the last mentioned plate to assist in aligning the selected type bars one at a time at the printing point.

39. In a typewriting machine, the combination of printing instrumentalities including a type carrier having types thereon, power means to actuate the type carrier to juxtapose the types one at a time at the printing point, an actuator to cause the type to print, means operable by said power means to operate said actuator, aligning means for the type carrier, said aligning means being independent of said actuator, and means independent of the actuator and operable by the second mentioned means to operate said aligning means.

40. In a typewriting machine, the combination of printing instrumentalities including a circular type carrier, radially arranged type bars thereon, means to rotate the type bar carrier to juxtapose any one of the type bars at the printing point, an actuator to cause the juxtaposed type bar to print, means to operate said actuator, aligning means for the type carrier and engaging the latter directly, and means actuable by said actuating means to operate said aligning means.

41. In a typewriting machine, the combination of printing instrumentalities including a circular type carrier, radially arranged type bars thereon, means to rotate the type bar carrier to juxtapose any one of the type bars at the printing point, an actuator to cause the juxtaposed type bar to print, means to operate said actuator, the top face of the type bar carrier being arranged to rotate in a plane making an acute angle with a plane extending through the direction of movement of the type bar actuating means and from side to side of the machine, there being a plurality of aligning apertures in said top face of the type bar carrier one for each type bar, each aperture being located diametrically opposite its type bar, an aligning device to enter any one of said apertures,

means to actuate said aligning device, and means to guide said aligning device in a plane perpendicular to the top face of the type carrier.

42. In a typewriting machine, the combination of printing instrumentalities including a type carrier, actuating means for the type carrier, means to detachably connect said type carrier to said actuating means, aligning means for the types of said carrier, said aligning means normally obstructing said type carrier against removal, and means whereby the aligning means may be shifted to an abnormal position to permit removal and ready replacement of the type bar carrier.

43. In a typewriting machine, the combination of printing instrumentalities including a type carrier, type bars thereon, actuating means for the type carrier to carry any one of the type bars into approximate alignment with the printing point, a type bar actuator, a guide for said actuator, means to detachably connect said type carrier to said actuating means, aligning means for the types of said carrier, said aligning means being supported on said guiding means and normally obstructing said type carrier against removal, and means to pivotally support said guide so that it may be shifted to carry the aligning means to an abnormal position to permit removal and replacement of the type bar carrier.

44. In a typewriting machine, the combination of a platen, type bars to print against said platen, a pressure element to press any one of the type bars against said platen, means including a lever of the first order to actuate said pressure element, a pivot for said lever, a support for said pivot, means to shift said support to vary the position of said pivot and thus vary the position at which the engaging end of said element comes to rest when operated in accordance with the thickness of paper around the platen, and resilient means to hold said support against said shifting means.

45. In a typewriting machine, the combination of a platen, type bars to print against said platen, a pressure element to press any one of the type bars against said platen, means including a lever to actuate said pressure element, a pivot for said lever, a supporting lever, a fulcrum for said supporting lever, the pivot of the actuating lever being carried by the supporting lever, means to adjust the supporting lever about its pivot to shift the pivot of the actuating lever to thus vary the position at which the engaging end of the pressure element comes to rest when operated in accordance with the thickness of paper around the platen, and a spring to hold the supporting lever against the adjusting means.

46. In a typewriting machine, the combination of a platen, type bars to print against said platen, a pressure element to press any one of the type bars against said platen, means including a lever of the first order to actuate said pressure element, a pivot for said lever, a bell crank, a fulcrum for said bell crank, the pivot of said lever being carried by one arm of said bell crank, setting means including an eccentric to engage the other arm of said bell crank to actuate said bell crank about its fulcrum to shift said lever and thus vary the position at which the engaging end of the pressure element comes to rest when actuated in accordance with the thickness of paper around the platen, and a spring to hold the arm of the bell crank against the eccentric.

47. In a typewriting machine, the combination of a platen, type bars to print against said platen, a pressure element to press any one of the type bars against said platen actuating means for said pressure element and operable always through a definite distance, and resilient means to prevent distortion of the pressure element in case there is an excessive thickness of work sheets around the platen.

48. In a typewriting machine, the combination of a platen, type bars to print against said platen, a pressure element to press any one of the type bars against said platen, actuating means for said pressure element and operable always through a definite distance, adjusting means to vary the distance the type bar engaging end of said element moves towards the platen in accordance with the thickness of paper around the platen, and resilient means to yield in case the adjusting means is set for a smaller thickness of paper than that around the platen so as to prevent injury to the pressure element or its actuating means.

49. In a typewriting machine, the combination of a platen, type bars to print against said platen, a pressure element to press any one of the type bars against said platen, means including a lever of the first order to actuate said pressure element, a pivot for said lever, a support for said pivot, means to shift said support to vary the position of said pivot and thus vary the position at which the engaging end of said element comes to rest when operated in accordance with the thickness of paper around the platen, and resilient means to hold said support against the support shifting means.

50. In a typewriting machine, the combination of a platen, type bars to print against said platen, a pressure element to press any one of the type bars against said platen, means including a lever of the first order to actuate said pressure element, a pivot for said lever, a bell crank, a fulcrum for said bell crank, the pivot of said lever being carried by one arm of said bell crank, setting means including an eccentric to engage the other arm of said bell crank to actuate said bell crank about its fulcrum to shift said lever and thus vary the position at which the engaging end of the pressure element comes to rest when actuated in accordance with the thickness of paper around the platen, and a spring tending to hold said bell crank in contact with said eccentric.

51. In a typewriting machine, the combination of printing instrumentalities including a rotatable type carrier, actuating means therefor, said type carrier being demountably supported on the actuating means, means constituting a driving connection between said actuating means and said type carrier, and means including a latch to hold said type carrier in its connected position.

52. In a typewriting machine, the combination of printing instrumentalities including a rotatable type carrier, actuating means therefor, said type carrier being demountably supported on the actuating means, means constituting a driving connection between said actuating means and said type carrier, means including a latch to hold said type carrier in its connected position, and a push button to actuate said latch to render it ineffective so that the type carrier may be disconnected from the actuating means.

53. In a typewriting machine, the combination of printing instrumentalities including a rotatable type carrier, a drive shaft, said type carrier having an aperture so that it may be slipped over the end of said shaft, a latch on said shaft to engage said type carrier and hold the latter on said shaft,

a spring tending to hold said latch in its effective position, and an element movable axially of said shaft for the purpose of actuating said latch to its ineffective position against the action of said spring.

54. In a typewriting machine, the combination of printing instrumentalities including a rotatable type carrier, actuating means therefor, said type carrier being demountably supported on the actuating means, a coupling, said coupling including an element on the actuating means, and a cooperative element on the type carrier whereby the type carrier is connected to the actuating means, means including a latch to retain the coupling elements connected, a spring tending to hold said latch in its effective position, and a finger piece movable axially of said actuating means to actuate said latch to its ineffective position against the action of said spring.

55. In a typewriting machine, the combination of printing instrumentalities including a rotatable type carrier, a drive shaft, said type carrier having an aperture so that it may be slipped over the end of said shaft, a coupling whereby the type carrier is connected to said shaft, said coupling including an element on said shaft and a cooperative element on said type carrier, a latch to retain the elements in cooperative relation, a push button to render said latch ineffective to permit removal of said type carrier from said shaft, a spring to return said push button to normal, and a spring to render said latch effective.

56. In a typewriting machine, the combination of a type bar carrier having individually operable type bars thereon, a type bar actuator, means to rotate said type carrier, an aligning device to cooperate with the type bar carrier to align the selected type bar with the printing point, and means to operate said type bar actuator, the last mentioned means being also effective to operate the aligning means.

57. In a typewriting machine, the combination of a type bar carrier having individually operable type bars thereon, a type bar actuator, means to rotate said type carrier, an aligning element to engage said type bar carrier to align the selected type bar with the printing point, mechanism to assist in actuating the aligning element, and means to operate said type bar actuator, the last named means being also effective to actuate said mechanism to operate said aligning element.

58. In a typewriting machine, the combination of a type bar carrier having individually operable type bars thereon, a type bar actuator, means to rotate said type carrier, an aligning element to engage said type bar carrier to align the selected type bar with the printing point, mechanism to assist in actuating the aligning element, means to operate said type bar actuator, the last named means being also effective to actuate said mechanism to operate said aligning element, said mechanism being effective to move the aligning element to its effective position before the active type bar prints.

59. In a typewriting machine, the combination of printing instrumentalities including a type bar carrier, type bars thereon, a platen against which the type bars are adapted to print, means to rotate said type carrier to juxtapose any one of the type bars at the printing point, means to support the type carrier in front of the platen and in a position so that its upper face slants forwardly and downwardly, said carrier having aligning apertures one for each type bar, two plungers arranged in front of said carrier and movable in divergent paths towards said carrier, and means to actuate said plungers, one of said plungers being effective to enter the aperture of the selected type bar, the other plunger being subsequently effective to cause the selected type bar to print against the platen.

60. In a typewriting machine, the combination of printing instrumentalities including a type bar carrier, type bars thereon, a platen against which the type bars are adapted to print, means to rotate said type carrier to juxtapose any one of the type bars at the printing point, means to support the type carrier in front of the platen and in a position so that its upper face slants forwardly and downwardly, said carrier having aligning apertures one for each type bar, two plungers arranged in front of said carrier and movable in divergent paths towards said carrier, operating means including a lever to actuate one of said plungers to cause the selected type bar to print against said platen, and means operable by said operating means to actuate the other plunger to cause the latter to enter one of the apertures before the type bar prints.

61. In a typewriting machine, the combination of a platen, a type unit including a body part, and individually operable type bars on said body part, means to rotate said type unit to juxtapose any one of the type bars at the printing point, two plungers, and means to actuate said plungers, one of said plungers cooperating with said body part to align the selected type bar with the printing point, the other plunger being subsequently effective to cause the selected type bar to print against said platen.

62. In a typewriting machine, the combination of a platen, a type unit including a body part, and individually operable type bars on said body part, said type unit resembling the frustrum of a cone, means to support said type unit in an inclined position in front of the platen with the larger end upward and forward so that its axis slants downwardly and rearwardly of the machine, means to rotate said type unit about its axis to juxtapose any one of the type bars at the printing point, each type bar while in its selected position being substantially vertical, the body part of said type set having a face in a plane at right angles to the axis of said type unit, said face having perforations therein one for each type bar, two divergent plungers, and means to actuate said plungers, one of said plungers being adapted to enter the aperture corresponding to the selected type bar to thus align the latter with the printing point, the other plunger being arranged to move horizontally to actuate the selected type bar.

63. In a typewriting machine, the combination of printing instrumentalities including type bars, a platen, means to juxtapose any one of the type bars at the printing point, and means including an element composed of sound deadening material to noiselessly engage the selected type bar to drive it to the platen, said means including also an element to press the type bar against the platen to cause it to print after it reaches the platen.

64. In a typewriting machine, the combination of a platen, a plurality of type bars, type bar selecting means to juxtapose any one of them at the printing point, means including an element to engage the juxtaposed type bar to press it against said platen, and a member of sound deadening material on said element to actuate the type bar before it is engaged by said element.

65. In a typewriting machine, the combination of a platen, a plurality of type bars, type bar selecting means to juxtapose any one of them at the printing point, a device composed of sound deadening material to actuate the juxtaposed type bar to the platen, and means to subsequently engage the type bar and press it against the platen while in contact with said platen to thus cause the type bar to print.

66. In a typewriting machine, the combination of a platen, a type bar to print against said platen, and means to actuate the type bar to move against the platen and retain it there, said means comprising pressure means to subsequently engage the type bar to press it against the platen and thus cause it to print.

67. In a typewriting machine, the combination of a platen, a type bar to print against said platen, and means to actuate the type bar to print against said platen, the actuating means including a plunger, and a resilient device protruding from its leading end to engage the type bar and actuate it to the platen prior to engagement of the type bar by the plunger, the plunger being subsequently effective to press the type bar against the platen.

68. In a typewriting machine, the combination of a platen, a type bar to print against said platen, actuating means including a pressure element, and a resilient member on said pressure element to engage the type bar and move it against said platen, said pressure element subsequently engaging the type bar directly to press it against said platen to print.

69. In a typewriting machine, the combination of a platen, a carrier, type bars on said carrier to print against said platen, means including a type bar actuator to cause them to print against said platen, a guide bracket for said actuator, means to support said guide bracket so that it may be moved to an abnormal position to give access to the type carrier, and a latch to hold said bracket in its normal position.

70. In a typewriting machine, the combination of a platen, a carrier, type bars on said carrier to print against said platen, means including a type bar actuator to cause them to print against said platen, a guide bracket for said actuator, means to pivotally support said guide bracket so that it may be swung to move said actuator to an abnormal position to give access to the type bar carrier, a pivoted latch element on said bracket, and a stationary keeper to be engaged by said latch to hold said bracket in its normal position.

71. In a typewriting machine, the combination of a platen, a carrier, type bars on said carrier to print against said platen, means including a type bar actuator to cause them to print against said platen, a guide bracket for said actuator, means to pivotally support said guide bracket so that it may be swung to move said actuator to an abnormal position to give access to the type bar carrier, said bracket being also effective to swing said actuator back to its normal position, a stop to arrest the bracket in its normal position, a latch to engage said stop to hold the bracket in its normal position, and resilient means tending to swing said bracket from its normal position.

72. In a typewriting machine, the combination of printing instrumentalities including a type carrier, actuating means for the type carrier, means to detachably connect said type carrier to said actuating means, aligning means for the types of said carrier, said aligning means normally obstructing said type carrier against removal, a bracket to support said aligning means, means to facilitate shifting of said bracket to carry said aligning means to an abnormal position to permit ready replacement of said type carrier, and a latch to hold said bracket in its normal position.

73. In a typewriting machine, the combination of printing instrumentalities including a rotatable type carrier, actuating means including a shaft to rotate said type carrier, a coupling including an element on the actuating means, and a cooperating element on the type carrier, said type carrier being mounted directly on said shaft and independent of said coupling, one of said elements having two diametrically opposite apertures one at each side of said shaft, the other element having two projections to engage in said apertures to form a couple which acts as a driving connection between the type carrier and said actuating means to permit said type carrier to be demountably connected with the actuating means, and means to insure entrance of said projections always into the same apertures to permit the type carrier to be connected to the actuating means in only one position about the axis of said shaft, the last mentioned means being also effective to locate the elements of said coupling with respect to each other.

74. In a typewriting machine, the combination of printing instrumentalities including a plurality of individual type sets, a shiftable support, a plurality of shafts one of each type set by which it is rotatably carried by said support, coupling members one on each shaft, a drive shaft, a cooperative coupling member on said drive shaft, means to shift said support to carry any one of the first mentioned shafts into alignment with said drive shaft, means to cause the coupling member of the aligned shaft to engage the cooperative coupling member, locking devices one for each type set and each to cooperate with the coupling member of the associated type set to lock the type set against accidental rotary displacement, and means to render ineffective the locking device of the selected type set.

75. In a typewriting machine, the combination of printing instrumentalities including a plurality of individual type sets, a shiftable support, a plurality of shafts one for each type set by which it is rotatably carried by said support, means associated with each shaft to demountably secure each type set to its shaft, a drive shaft, means to connect any one of the first mentioned shafts to said drive shaft, locking devices one associated with each one of the first mentioned shafts to lock it against rotation, means to actuate said support to carry any one of the type sets into cooperative relation with the said drive shaft, and means to render ineffective the locking device associated with the selected type set.

76. In a typewriting machine, the combination of printing instrumentalities including a plurality of type sets, a turn table, a plurality of rotatable spindles on said turn table, each spindle having one of the type sets thereon to rotate therewith, a drive shaft, means to rotate said turn table to carry any one of said spindles into cooperative engagement with said drive shaft, means to lock said turn table against rotation, means to lock each spindle against rotation, means to release the turn table from the locking means, and means to release the spindle of the selected type set from its locking means.

CHARLES A. FUCHS.