(No Model.)

2 Sheets—Sheet 1.

W. J. KERP.

TEMPORARY BINDER.

No. 436,356. Patented Sept. 16, 1890.

FIG. 1.

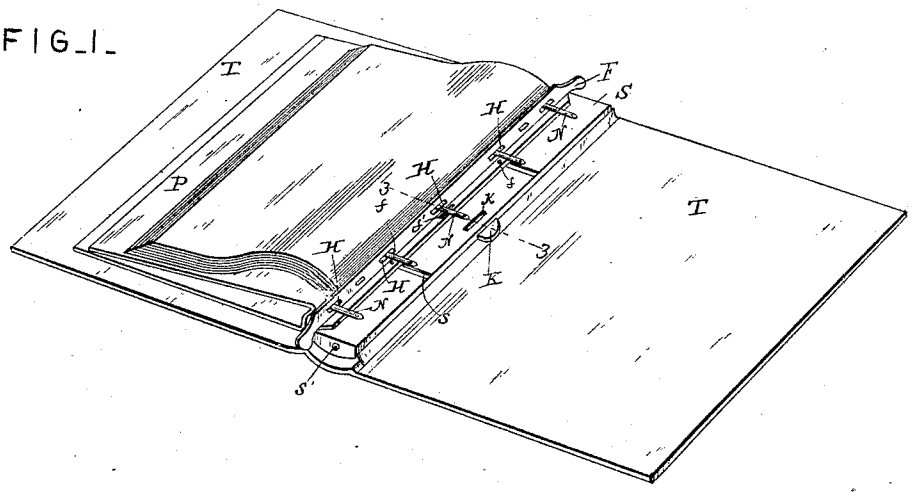

FIG. 2

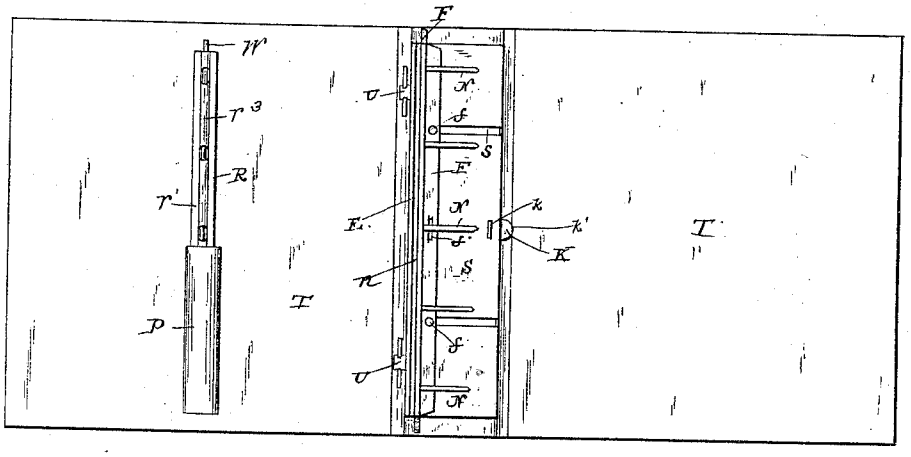

FIG. 3.

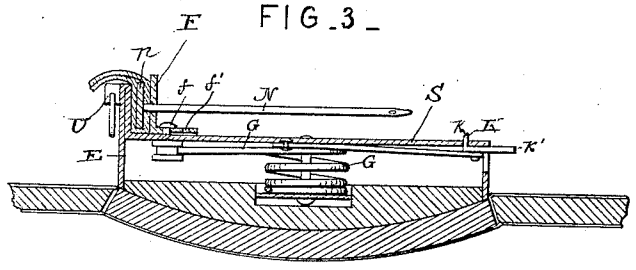

Witnesses

Jas. K. McArthur

N. J. Gallaher

Inventor

Wilhelm J. Kerp

By his Attorneys,

C. A. Snow & Co.

THE NORRIS PETERS CO., PHOTO-LITHO., WASHINGTON, D. C.

(No Model.) 2 Sheets—Sheet 2.

W. J. KERP.

TEMPORARY BINDER.

No. 436,356. Patented Sept. 16, 1890.

FIG. 4.

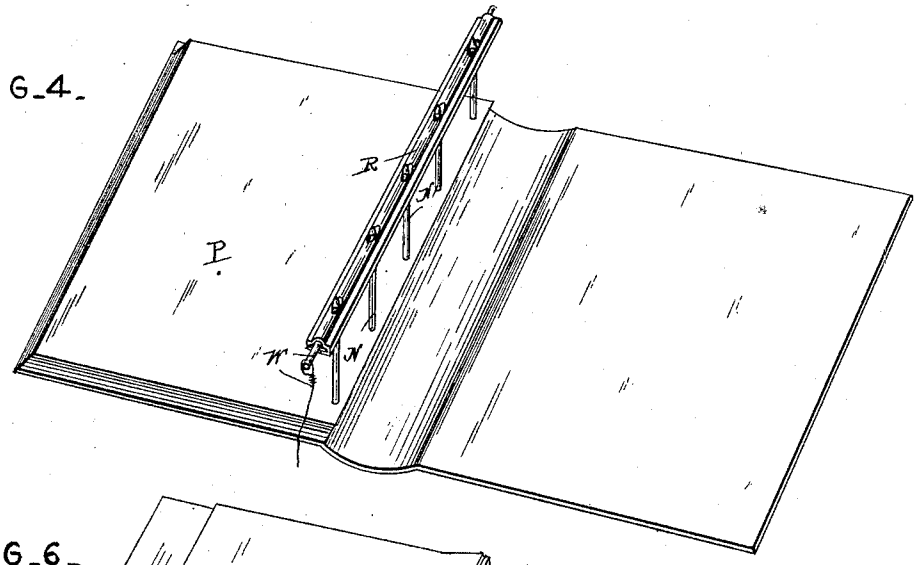

FIG. 6.

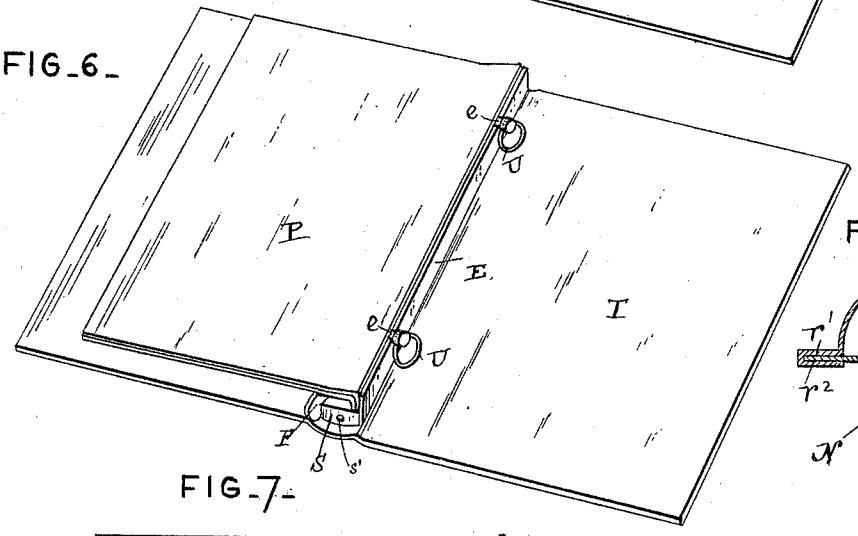

FIG. 5.

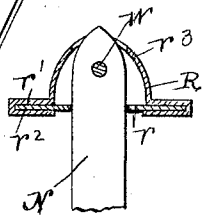

FIG. 7.

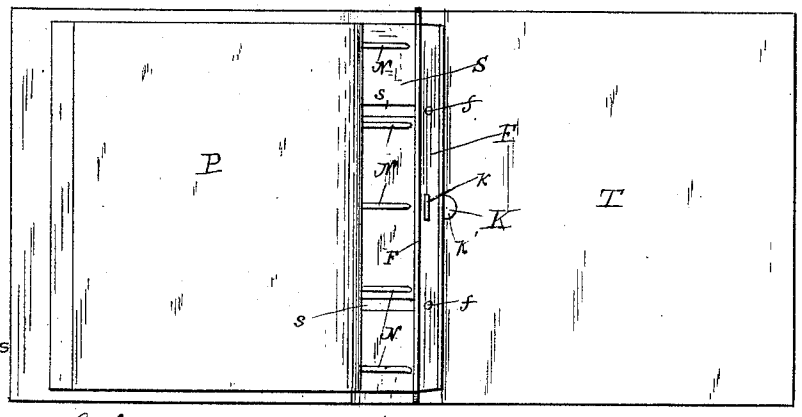

Witnesses

Jas. K. McCathran

N. L. Collamer

Inventor

By his Attorneys, Wilhelm J. Kerp

C. A. Snow & Co.

THE NORRIS PETERS CO., PHOTO-LITHO., WASHINGTON, D. C.

UNITED STATES PATENT OFFICE.

WILHELM JOSEPH KERP, OF FORT WAYNE, INDIANA, ASSIGNOR OF ONE-HALF TO DANIEL KLOTZ, OF SAME PLACE.

TEMPORARY BINDER.

SPECIFICATION forming part of Letters Patent No. 436,356, dated September 16, 1890.

Application filed June 20, 1890. Serial No. 356,054. (No model.)

To all whom it may concern:

Be it known that I, WILHELM JOSEPH KERP, a citizen of the United States, residing at Fort Wayne, in the county of Allen and State of Indiana, have invented a new and useful Temporary Binder, of which the following is a specification.

This invention relates to book-binding, and more especially to those devices used in this art which are known as "temporary binders;" and the object of the invention is to provide improved means for filing papers within a permanent cover which is detachably supported in the temporary binder. This end I attain by the mechanism hereinafter fully described, and illustrated in the drawings, in which—

Figure 1 is a perspective view of this device complete, showing it open and ready for the reception of papers. Fig. 2 is a plan view of the temporary cover, with the parts attached thereto. Fig. 3 is an enlarged transverse section on the line 3 3 of Fig. 1. Fig. 4 is a perspective view of the permanent cover when open, showing it nearly filled with papers which are held upon the needles by the retaining-strip and wire. Fig. 5 is an enlarged cross-section of the strip and wire, with one of the needles in elevation and its eye engaged by said wire. Fig. 6 is a perspective view, showing the manner in which the permanent cover is held within the temporary cover. Fig. 7 is a plan view showing the manner in which the filling-strip is retracted.

Referring to the said drawings, T is a cover composed of board or any other suitable material, connected by a back and composing the temporary binder, its size being somewhat larger than that of an extra-large-sized letter-sheet, and S is a metallic sheath or casing secured to the inside of the back of this temporary cover, as shown.

F designates a filling-strip of L-shape cross-section, which has pins *f* projecting downwardly through transverse slots *s* in the sheath S, and G is a spring within the sheath whose ends bear upon said pins and force the filling-strip toward the inner edge of the sheath, which inner edge is turned up as at E, and provided with notches *e* near its edge.

Within the sheath S is arranged a spring-catch K, whose beveled tip *k* projects upwardly through a hole in the sheath near its front edge and whose end *k'* forms a thumb-piece by which the catch may be depressed. The filling-strip F has a slot *f'*, adapted to engage the tip *k* of this catch when the strip is in its outmost retracted position; but when the thumb-piece *k'* is depressed it will be understood that the catch will disengage the filling-strip and the spring G will force the latter inwardly upon the upper face of the sheath toward its inner edge E. The sheath, as thus constructed, is secured in any suitable manner to the back of the temporary binder, as by screws *s'*.

P designates a permanent cover composed of board or any other suitable material connected by a flexible back, its size being a little less than that of the temporary cover.

n is a metallic strip carrying a number of needles N, which are passed through the flexible back of this permanent cover, the strip *n* standing against the outer face thereof, as will be clearly understood. The two boards of the permanent cover are then bent with their outer faces against each other, the back being folded over the strip *n*, and said strip and folded back are passed down along the inner face of the turned-up edge E of the sheath. Thumb-screws U are passed through the notches *e*, through the back of the permanent cover, which is folded over the strip *n* and into threaded holes in this strip, and by this means the permanent cover is retained within the temporary one, and the strip and needles are held in proper position. When it is desired to insert papers in this binder, the filling-strip is retracted, as shown in Fig. 7, the papers inserted so that their left edges rest upon the sheath, and then pressed to the left over said needles, and the catch K depressed to release the filling-strip. The spring G moves this strip inwardly, as above described, and the holes H in its body pass over the needles, the papers which have just been applied being forced to the left or inwardly on the needles against the turned-up back of the permanent cover or against any other papers which may be already on file. When

the permanent cover P has become filled, the thumb-screws U are removed, the filling-strip F retracted and held by the catch K, and the retaining-strip R taken from a pocket *p*, arranged at any suitable point in the temporary cover, as shown, and secured to the ends of the needles N, to hold the papers in place in the permanent cover.

The retaining-strip R consists of a plate *r*, which is straight in cross-section, and a second plate *r'*, whose edges are bent around the edge of the plate *r*, as shown at r^2, and whose center is raised above that of the said plate *r*, as shown at r^3, thereby forming a longitudinal opening, in which moves a wire pin W. Both plates *r* and *r'* are provided with a number of transverse openings, adapted to register with the needles N. With this construction the wire W is first withdrawn, the retaining-strip *r* placed in position over the points of the needle and borne down until the eyes of said needles stand in alignment with the longitudinal opening in the strip, and the wire W then replaced in the opening and passed through the eyes of the needles. The boards of the permanent cover are then brought into their proper position and a book thereby formed, wherein all the letters are securely bound.

An index in blank may have been first placed within the permanent cover, in which the letters or papers contained therein are properly entered, and the back of this cover being indorsed or labeled the whole may be stored away for future reference. Another strip *n* with a corresponding number of needles N and another permanent cover P are then placed in the same position within the temporary cover, and letters or papers as fast as they accumulate inserted therein as before. In case, however, it should not be desirable to store away the strip *n* and needles N within the retaining-strip R, it will be obvious that said strip could be removed, a stout twine or fine wire passed through the eyes of the several needles and given considerable slack between them, the papers and letters removed from the cover and slipped off the needles, whereby the twine would be drawn through the holes near their left edges, the twine cut and tied, and a complete file of the papers thus made without the use of the strip, needles, and retaining-strip; or, the needles could be withdrawn from the papers and through the back of the permanent cover, and the twine then cut and tied in the same manner, whereby the papers would be bound in this cover to be stored away and the strip and needles could be used again within the temporary cover; or any other preferred form of cord-binding could be used whereby the strip and needles could be again employed in connection with the temporary cover, all of which is old in the art and forms no part of the present invention.

What I claim is—

1. In a temporary binder, the combination, with the temporary cover, the sheath therein having a turned-up edge provided with notches, the spring-actuated filling-strip provided with holes, and a catch for holding said filling-strip in retracted position, of a strip carrying a number of needles adapted to register with the holes in said filling-strip, and set-screws removably seated in said needle-strip and passing through said notches, whereby the needle-strip is detachably secured to said turned-up edge, as and for the purpose set forth.

2. In a temporary binder, the combination, with the temporary cover, and the spring-actuated filling-strip therein provided with a number of holes, of the permanent cover, a needle-strip having a number of needles adapted to register with said holes, and means for securing said permanent cover and needle-strip detachably within the temporary cover, substantially as described.

3. In a temporary binder, the combination, with the temporary cover, the sheath therein having a turned-up edge provided with notches, and the spring-actuated filling-strip moving upon said sheath toward said edge, of the permanent cover, the needle-strip having a number of needles passing inwardly through the back thereof and through registering-holes in said filling-strip, said back being folded over the needle-strip, and set-screws passing through said notches, through said turned-over back, and into said needle-strip, substantially as and for the purpose set forth.

4. In a temporary binder, the combination, with the needle-bar having a number of needles projecting outwardly therefrom and provided with eyes near their free end, of the retaining-strip comprising a flat plate, a bent plate whose edges are turned over those of the flat plate, and holes through both plates registering with the needles, and a wire passing through the longitudinal opening between the plates and through the eyes of the needles, substantially as described.

5. In a temporary binder, the combination, of the temporary cover having a filling-strip, the permanent cover having a needle-strip, and the retaining-strip, all substantially as and for the purpose described.

6. In a temporary binder, the combination, with the temporary cover, the sheath detachably connected to the back thereof and having transverse slots, the inner edge of the sheath being turned up, a spring within said sheath, a filling-strip moving over said sheath and having pins connected with said spring through said slots, and holes in the upright member of said filling-strip, of a needle-strip detachably secured to said turned-up edge, and needles projecting therefrom through said holes, substantially as described.

7. In a temporary binder, the combination, with the temporary cover, the hollow sheath connected to the back thereof, and having transverse slots through its body, the inner

edge of the sheath being turned up, an L-shaped filling-strip whose horizontal member moves over said sheath and is provided with a central slot, and whose vertical member has a number of holes, a spring within the sheath whose ends are connected by pins through said slots with the horizontal member, and a spring-catch within the sheath whose tip engages said central slot, of a needle-strip detachably secured to said turned-up edge, and needles projecting therefrom through said holes, substantially as and for the purpose hereinbefore set forth.

8. In a temporary binder, the combination, with the temporary cover and a spring-actuated filling-strip therein provided with a number of holes, of the permanent cover, and a needle-strip having a number of needles adapted to register with said holes, substantially as described.

In testimony that I claim the foregoing as my own I have hereto affixed my signature in presence of two witnesses.

WILHELM JOSEPH KERP.

Witnesses:
DANIEL KLOTZ,
JOHN T. RODABAUGH.