United States Patent [19]

Stewart

[11] **3,807,493**

[45] **Apr. 30, 1974**

[54] HEAT EXCHANGER USING U-TUBE HEAT PIPES

[75] Inventor: **William G. Stewart,** Pennington, N.J.

[73] Assignee: **Kooltronic Fan Company,** Princeton, N.J.

[22] Filed: **Sept. 28, 1971**

[21] Appl. No.: **184,465**

[52] **U.S. Cl.** **165/105**

[51] **Int. Cl.** **F28d 15/00,** F28d 7/06

[58] **Field of Search** 165/105; 285/155

[56] **References Cited**

UNITED STATES PATENTS

3,262,497	7/1966	Worthen et al.	285/155
1,773,643	8/1930	Romanchak	285/155
3,640,090	2/1972	Ares	165/105
2,970,811	2/1961	Ruch et al.	165/105
3,662,542	5/1972	Streb	165/105
1,690,108	11/1928	Grady	165/105

FOREIGN PATENTS OR APPLICATIONS

739,991	8/1943	Germany	165/105

Primary Examiner—Benjamin W. Wyche
Assistant Examiner—Allan Russell Burke
Attorney, Agent, or Firm—Ostrolenk, Faber, Gerb & Soffen

[57] **ABSTRACT**

A heat exchanger of the tube and fin type in which either straight or U-shaped elongated heat pipes are employed as the tube members. The radiating fin members are arranged in parallel fashion in a direction transverse to the heat pipe members and are spaced in either a uniform or non-uniform manner. The heat pipes are filled with a working fluid and further may contain a porous sleeve whereby the liquid, upon boiling is driven to a first end of the tube, condensed and returned to the opposite end of the tube by capillary action so as to maintain a highly uniform temperature level along the length of the heat pipes. The porous return medium may be omitted where tubes are oriented with condensing section above evaporating section. The tube and fin structure is provided with an isolating barrier between at least two of the fins which are located intermediate the ends of the structure, which isolating barrier is then arranged substantially coplanar with a barrier wall separating the region of elevated temperature from a region of reduced temperature level. The isolating barrier may be formed of an insulating or conductive material. Blower means are preferably provided in each of the aforesaid regions for moving air contained within its specific region over the radiating fins. The heat pipe members transfer the heat from the region of elevated temperature level to the region of reduced temperature level in a highly efficient manner so as to yield a heat exchange member of high efficiency while eliminating the need for separate pump and fluid transport means normally employed in heat exchange units of equivalent cooling capacity.

A heat exchange unit of the tube and plate type may be substituted for the aforementioned tube and fin type providing a unit of equivalent capacity and efficiency.

3 Claims, 10 Drawing Figures

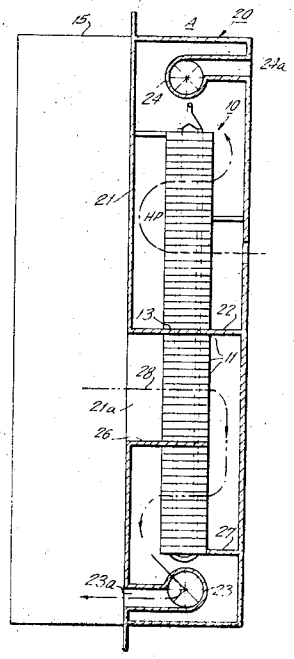

PATENTED APR 30 1974

3,807,493

SHEET 1 OF 2

FIG. 1.

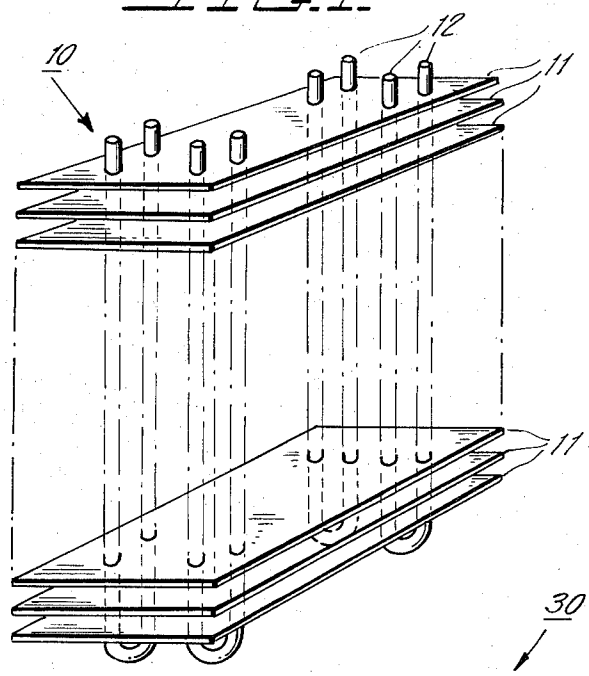

FIG. 1a.

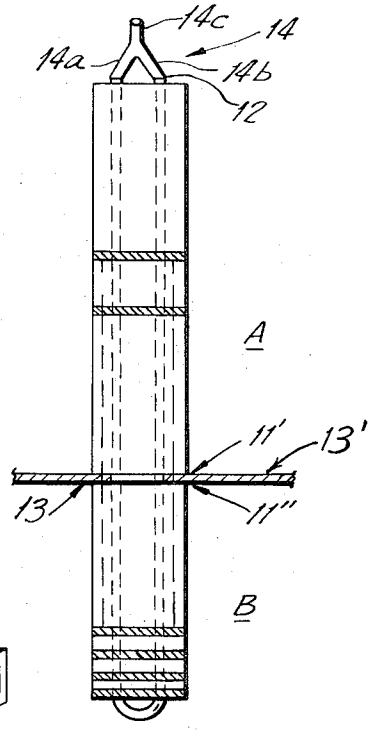

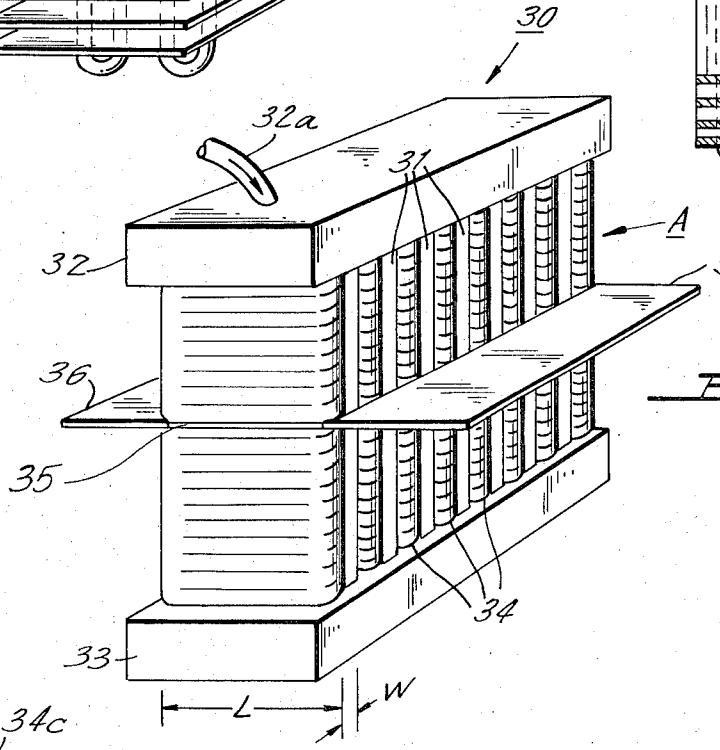

FIG. 3A.

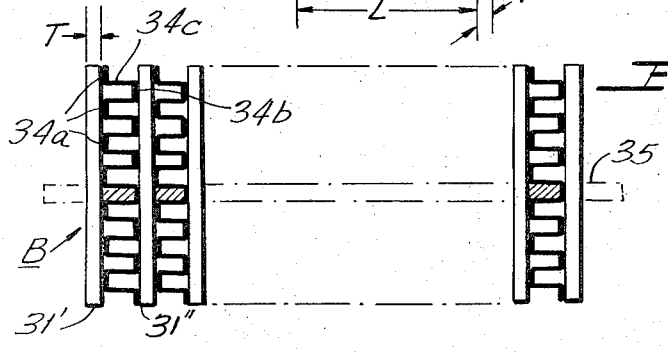

FIG. 3B.

INVENTOR.
WILLIAM G. STEWART

BY
Astrolenk, Faber, Gerb & Soffen

ATTORNEYS

FIG. 2A.

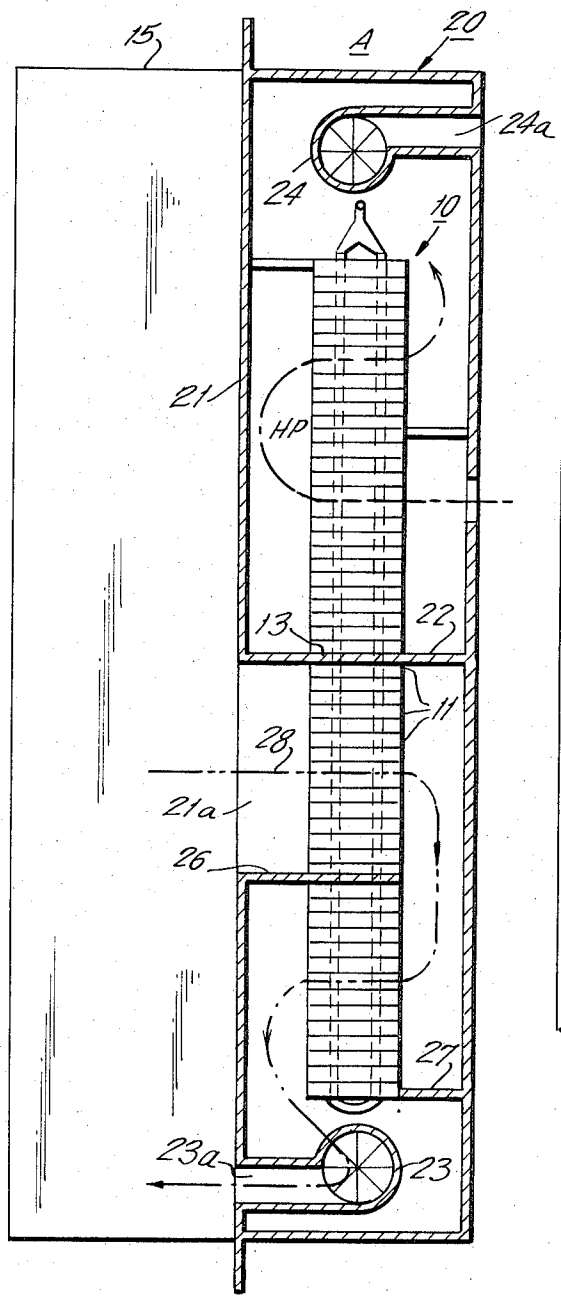

FIG. 2.

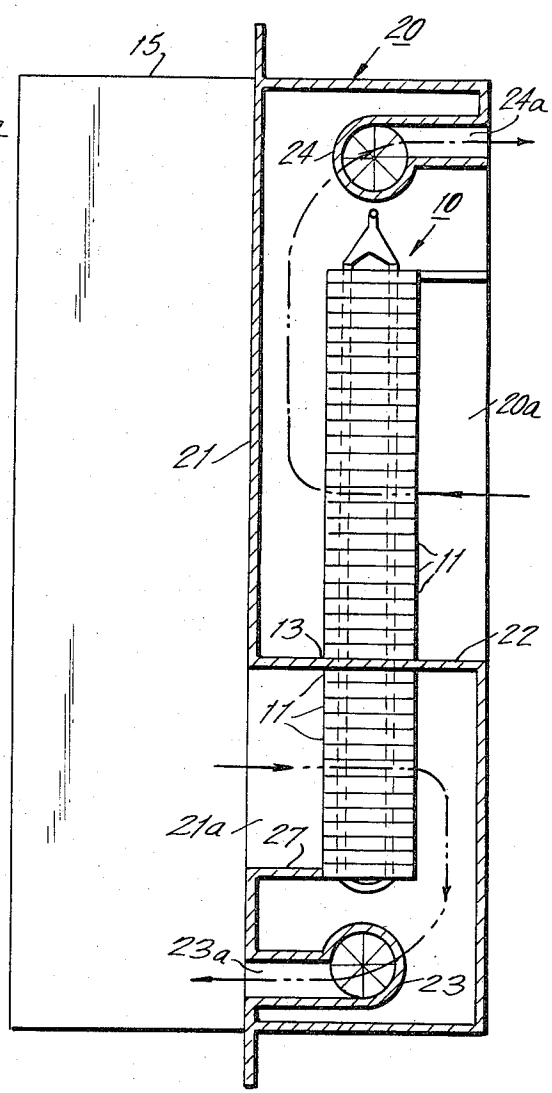

FIG. 4c.

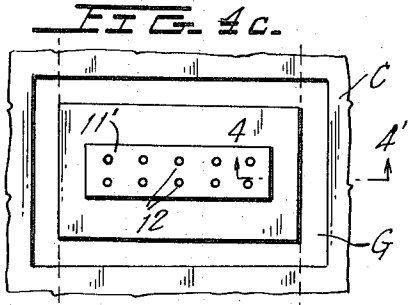

FIG. 4a.

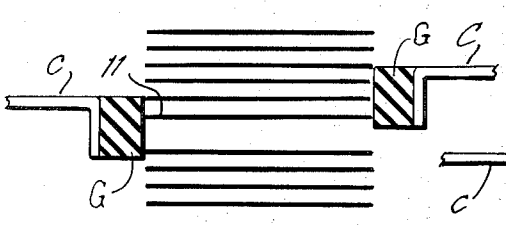

FIG. 4b.

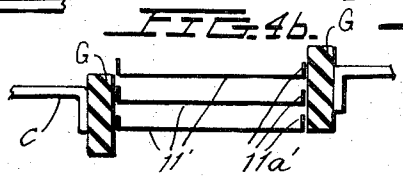

FIG. 4d.

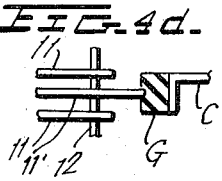

HEAT EXCHANGER USING U-TUBE HEAT PIPES

The present invention generally relates to the heat exchange field, more particularly to a novel heat exchange unit preferably of the tube and fin or tube and plate type which utilizes heat pipes for cooling regions of elevated temperature in a highly efficient manner and without the need for external fluid transport means.

BACKGROUND OF THE INVENTION

Heat exchange units find widespread use throughout a wide variety of industiral and/or commercial applications. One very important area in which heat exchange units are employed is that in which sensitive electronic equipment may be employed in environments in which extreme temperature and/or humidity conditions may exist. Also, such environments may develop or create noxious fumes of a chemical nature which are emitted as a by-product of the particular processes and/or equipment which the electronic equipment is being employed to regulate. Quite frequently electronic equipment such as, for example, large and small scale computers are employed in chemical process plants or manufacturing plants in which the environment for the electronic equipment is less than ideal. It thus becomes extremely important to completely isolate the computer equipment from the undesirable environmental conditions existing within the region of the computer or electronic control equipment. Since electronic equipment of this nature generates heat during its operation, it becomes important to provide means for carrying the heat away from the equipment in an efficient and preferably inexpensive manner. Since the nature of the installation may place severe constraints upon the physical space in which the electronic control equipment is placed, these constraints in a like manner carry over to the equipment employed for cooling the electronic equipment. It thus becomes extremely important to provide equipment which has the cooling capacity to maintain the electronic equipment at a safe temperature level, which operates at a high degree of efficiency and which is inexpensive to purchase and maintain, as well as being capable of providing the necessary cooling capacity efficiency while occupying a minimum amount of space.

One conventional manner for achieving the above objectives is through the use of air conditioning machines employing compressors, or connected heat exchangers within and external to the equipment compartment through which coolant is pumped. Both devices are usually large and expensive and therefore have limitations as to the variety of applications in which they may be advantageously employed.

Another conventional cooling technique resides in the use of a barrier wall which serves as the means for isolating the region of elevated temperature from the region of lower temperature (which is usually ambient) and which further serves as the heat transfer surface for conveying heat from the region of elevated temperature level to the region of lower temperature. One typical apparatus of the latter category is described in U.S. Pat. No. 3,559,728 issued Feb. 2, 1971 and assigned to the present assignee and in which a heat transfer surface is preferably provided with a corrugated configuration to increase overall surface area. A major disadvantage of such cooling units lies in the inability to provide a sufficiently large surface area for transfer of heat at an acceptably low temperature difference. One approach for enhancement of the heat transfer capability is the utilization of fins which are arranged substantially transverse to the heat transfer surface so as to increase the overall surface area of the heat transfer member in both the region of elevated temperature and the region of lower temperature.

BRIEF DESCRIPTION OF THE INVENTION

The present invention is characterized by providing heat exchange apparatus which overcomes the disadvantages of conventional heat exchange units and which employs heat pipes to greatly increase the efficiency of the heat exchange unit while totally eliminating the need for pumps or compressors which typically require independent electrical energy sources for their operation.

The present invention is comprised of a heat exchange unit which in one preferred embodiment is of the tube and fin type. The structure is comprised of a plurality of elongated either linear or U-shaped heat pipes which may also be joined at both ends, which form the tube portion of the tube and fin structure, which pipes are arranged in spaced parallel fashion within a fin structure comprised of a plurality of spaced parallel conductive fins arranged substantially perpendicular to the longitudinal axes of the heat pipes. Each of the heat pipes is comprised of an elongated conductive member filled with a liquid having a predetermined, preferably low boiling point which is hermetically sealed within the heat pipe. A porous sleeve may be provided around the interior wall of the heat pipe. As the temperature of the heat pipe is raised at one end the liquid is vaporized and is urged toward the low temperature end of the heat pipe where it becomes condensed and returns by capillary action along the porous sleeve or by gravity toward the high temperature end of the heat pipe. Such heat pipes are highly efficient and have a temperature gradient across the length of the heat pipe which is quite low.

An isolating barrier, which may, for example, be an epoxy or other material capable of being deposited or inserted between a pair of adjacent fins at a point intermediate the ends of the tube and fin structure so as to form a barrier layer. The barrier layer is preferably arranged so as to lie coplanar with a barrier surface which separates the respective regions of elevated and ambient temperature. Blower means are preferably provided in close proximity to opposite ends of the tube and fin structure to facilitate the movement of air across the fins so as to improve the efficiency of the device. Since the efficiency of the heat pipe members is quite high, the system has a high heat transfer capacity, is capable of providing the necessary heat transfer function within the constraints of a very confined area and completely avoids the need for separate fluid handling means.

Whereas the preferred embodiment described hereinabove is of the tube and fin type, it should be understood that the structure may be replaced by the plate and fin type of heat exchanger to provide a heat exchange unit of comparable size and efficiency.

It is therefore one object of the present invention to provide a novel heat exchange unit of the tube and fin type employing heat pipes.

Another object of the present invention is to provide a novel heat exchange unit of the plate and fin structure employing heat pipes.

Still another object of the present invention is to provide a novel heat exchange unit employing secondary surfaces having a high heat transfer capability in conjunction with heat pipe devices of very high efficiency so as to yield excellent cooling capacity while being adapted for use in applications having severely limited space requirements.

BRIEF DESCRIPTION OF THE FIGURES

These as well as other objects of the present invention will become apparent when reading the accompanying description and drawings in which:

FIG. 1 is a perspective view of a heat exchange unit of the tube and fin type;

FIG. 1*a* shows an elevational end view of the structure of FIG. 1;

FIG. 2 shows a heat exchange unit of the type shown in FIGS. 1 and 1*a* incorporated as an integral part of a cooling system;

FIG. 2*a* shows an alternative embodiment for the cooling system of FIG. 2;

FIG. 3*a* is a perspective view showing the heat exchange unit of the tube and plate type;

FIG. 3*b* is a side view of the unit of FIG. 3*a*;

FIGS. 4*a* –4*c* are views showing alternative arrangements for forming the barriers; and

FIG. 4*d* is a sectional view of FIG. 4*c* looking in the direction of arrows 4—4′.

DETAILED DESCRIPTION OF THE FIGURES

Heat pipes are well known in the prior art. The conventional form of heat pipe is comprised of an elongated conductive pipe sealed at both ends and containing a working fluid having a predetermined boiling temperature. A porous sleeve or wick is provided along the interior surface of the pipe and runs substantially the entire length thereof. The input of heat at one end of the pipe causes the working fluid to evaporate from the wick and also increases the vapor pressure at that end. The vapor moves down the core of the pipe carrying heat energy toward the output end. When the heat is removed from the pipe, the vapor condenses and returns to the porous wick where it is returned by capillary action to the input end. Since the working fluid boils and condenses at substantially the same temperature level, the temperature along the pipe tends to be quite uniform.

FIG. 1 shows a heat exchange unit **10** comprised of a plurality of rectangular shaped fins **11** arranged in spaced parallel fashion and secured to a plurality of pipes **12** each of which are U-shaped and are arranged with their longitudinal axes transverse to the planes of the fins. The structure of FIG. 1 is typically referred to as a tube and fin heat exchange structure.

FIG. 1*a* shows the manner in which the tube and fin structure **10** of FIG. 1 is modified to form an integral part of a heat exchange unit. As shown therein plates **13** and **13′** are inserted into the region between two fins **11** and **11′** which lie intermediate the ends of the structure **10** and are sealed with a suitable material to form a barrier which will prevent intermixing of air flows between the upper and lower sections A and B of structure **10.** Alternately a single fin of larger size may be installed in the plane **13-13′**. FIGS. 4*a* — 4*d* show other constructions according to the present invention designed to compartmentalize and isolate the air flow. FIGS. 4*c* and 4*d* show in detail one construction for compartmentalizing the air flow wherein one, or a plurality of intermediate fins or plates **11′** is made slightly larger and interposed among the fin array shown in FIG. **1.** Fin **11′** is surrounded by, and has its peripheral edge engaging a resilient gasket G. Gasket G is in turn secured to a barrier plate C, generally seen in the embodiments of FIGS. 4*b* and 4*d*. In another construction, as seen in FIG. 4*a*, gasket G is designed to nestle tightly against the peripheral portions of a plurality of fins **11.** The engagement of gasket G yields a substantially airtight seal between the upper and lower portions or compartments of the inventive heat exchanger.

FIG. 4*b* shows a slightly modified arrangement in which a few of the intermediate plates **11′** are bent at their ends **11***a′* to provide greater surface engagement between the intermediate fins **11′** and gasket G. FIG. 4*a* shows that misalignment of the gasket G engaging the plates **11** does not effect the seal so long as the gasket engages at least one plate around its entire periphery. If desired, the bent portions **11***a′* of plates **11′** may be bent in opposite directions at their opposing ends. Regardless of the techniques employed, it is important to note that the barrier which separates upper and lower compartments of the heat exchanger enclosure must be sealed as required to prevent the exchange of air or other fluid being cooled between these compartments. Also the enclosure preferably is close fitting to the ends of plates **12** (as shown) by dotted lines D,D to cause the air to pass through the plates **12.** Each of the U-shaped tubes **12** form a single heat pipe structure which may be provided with a porous sleeve, not shown, which may either be a fabric wick of metallic or non-metallic fibers, preferably arranged to form a mesh, or may be a layer of porous material deposited upon the interior surface of the heat pipe. The coolant may be any working fluid which is selected so as to boil at the desired operating temperature and may be taken from the group of working fluids which include methanol, acetone, water, fluoridated hydrocarbons, mercury, indium, cesium, potassium, sodium, lithium, lead, bismuth,and a range of inorganic salts, the particular working fluid selected being controlled by the temperature range of operation which may be from below freezing to over 3600°F. In the preferred embodiment of the present invention, Freon has been found to be a suitable working fluid.

The tube and fin structure of FIGS. 1 and 1*a* may be of conventional design such as those which are normally employed to provide one continuous serpentine path by joining each of the U-shaped tube members end-to-end. The conventional structure is modified for use in the present application whereby each individual U-shaped tube is fitted with a "Y" tube **14** having tubular arms **14***a* and **14***b* joined to the upper ends or the U-shaped tube **12** and communicating with the common tubular arm **14***c*. U-shaped tube is filled with Freon through the common tubular arm **14***c* and is then hermetically sealed. The liquid level of the working fluid within the tube is determined by the heat transfer characteristics of the working fluid in vapor and liquid phase with the height of the liquid surface established at the level which provides essentially equal heat transfer in each region of the tube. The location of barrier **13** would be coincident with the liquid-gas interface at

design temperature. Although the spacing between fins **11** may be uniform, it should be understood that non-uniform spacing may be employed. In addition thereto, the barrier wall **13** need not be located at a point equidistant from the top and bottom ends of the tube and fin structure but may be located elsewhere as indicated above, or as established by conditions involving air handling rates in evaporator and condenser sections.

FIGS. **2** and **2***a* show one preferred arrangement in which the tube and fin structure of FIGS. **1** and **1***a* may be employed. The orientation of the unit **10** is preferably vertical, although orientations deviating from vertical alignment may be employed if desired. As shown in FIG. **2**, housing **15** represents the substantially air-tight enclosure of a region of elevated temperature (relative to ambient) which is to be cooled by the heat exchange unit. Typical equipment which may be housed within enclosure **15** may be a small scale computer or other electrical or electronic control unit which may, for example, comprise a large plurality of racks of electronic boards such as printed circuit boards and the like. Typical components may be semiconductors, transistors, vacuum tubes, diodes and the like, as well as passive components such as, for example, capacitors, inductors, transformers and resistors, all of which components, both of the active and passive category, generate heat during their operation. Since the electronic equipment may be used in environments which are detrimental to their successful operation as a result of temperature or humidity conditions or noxious fumes and the like, the compartment **15** may be so designed as to air-tightly seal the equipment housed within compartment **15** from the surrounding environment.

The heat exchange unit is mounted within a housing **20** which shares a common wall **21** with housing **15.** Housing **20** is provided with a barrier plate **22** which may be either metallic or non-metallic and which is secured within the housing **20** by any suitable supporting structure. Barrier plate **22** may be simply an enhanced fin, or a two part structure as shown in FIG. **1***a* as **13–13'** . Alternately the barrier plate **22** may be provided with an elongated rectangular shaped opening for receiving the heat exchange unit **10** whose barrier wall **13** is arranged so as to be coplanar with the barrier plate **22.** Common wall **21** is provided with an opening **21***a* through which the air circulating within housing **15** may pass. A blower unit **23** which may be a conventional blower means is positioned beneath the lower end of heat exchange unit **10** and is designed so as to draw air circulating within housing **15** across the fins **11** located at the lower end of heat exchange unit **10** so that the air passing through the fins transfers heat thereto and in passing therethrough is cooled and returned through blower means **23** and its outlet end **23***a* to return to the interior of housing **15.**

Ambient air is drawn into the upper compartment of housing **20** through opening **20***a* so as to pass through the fins **11** provided at the upper end thereof. The air, passing over fins **11**, picks up the heat conducted by the fins **11** and carries the air upwardly through a second blower **24** where the air then emerges through the outlet end **24***a* thereof to return to the surrounding atmosphere.

The heat transferred to the fins **11** at the lower end of the heat exchange unit **10** by the air entering into the heat exchange unit from housing **15** is accordingly conducted to the heat pipes **12** which operate in the manner described hereinabove so as to transport the heat to the upper end of the heat exchange unit. The evaporated working fluid gives up heat and is condensed at the upper end of the heat exchange unit **10** transferring the heat carried thereby to the upper end of each of the heat pipes, which heat is then conducted to the fins. The heat is then transferred to the entering air which carries the heat off through blower **24** whereby the heated air is returned to the surrounding atmosphere.

The cooling capacity of the unit may be enhanced by the addition of more heat pipes and/or fins. For example, the length of the heat exchange unit **10** may be increased, whereby each of the heat pipes are then increased in length and additional fins are added thereto. Alternatively, the same number of fins may be employed and the number of heat pipes, while not increased in length may be increased in quantity to increase the heat transfer capacity by reducing thermal gradients in fins. As another alternative the fins may be made either longer or wider, or both, and the number of heat pipes may be increased while maintaining the overall height of the heat exchange unit constant.

Another alternative technique which may be employed is shown in FIG. **2***a* wherein the quantity of heat pipes and fins and dimensions thereof are not increased but the air to be cooled is caused to travel over a longer and more tortuous path. As shown in FIG. **2***a*, the lower compartment of the heat exchange unit is provided with first and second barrier plates **26** and **27.** The air from housing **15** enters through opening **21***a* in common wall **21** and, due to the presence of barrier plate **26** is caused to pass through those fins **11** which are positioned above barrier wall **26** and to then move downwardly and between those fins **11** which lie between the upper barrier plate **26** and the lower barrier plate **27** whose path is designated by the dotted line **28.** The air after passing through the fins located between upper barrier plate **26** and lower barrier plate **27** is ultimately caused to be drawn downwardly beneath the level of lower barrier plate **27** so as to be returned by blower **23** into housing **15** through the outlet opening **23***a* of the blower. If desired, a similar configuration may be employed in the upper compartment. Thus, by increasing the velocity of air flow through the fins, overall capacity of the heat exchange unit may be, under some conditions, increased without any increase in the size and quantity of the tube and fin structures.

FIG. **3***a* is the perspective view of the heat exchange unit **30** of the tube and plate type, with FIG. **3***b* showing an elevational end view thereof. The plate and fin heat exchange unit **30** is comprised of a plurality of tubes **31** each of which tubes depart from the circular cross-sectional configuration of the tubes **12** shown in FIGS. **1–2***a*. The tubes are often fabricated of parallel plates, joined at their left and right-hand ends (relative to FIG. **3***a*) and have a length L which is many times greater than their width W. The plate tubes **31** are arranged in spaced parallel fashion with relatively close spacing between adjacent tubes. The tubes are mounted between upper and lower manifolds **32** and **33** respectively, which are substantially rectangular shaped hollow containers each having a plurality of openings which are designed to communicate with the upper and lower ends of tubes **31.** One advantage of this design enables all of the tubes to be filled with the working fluid through a single operation simply by inserting the

working fluid through a suitable opening 32*a*, preferably provided in the upper manifold 32. Since the lower manifold member 33 communicates with each tube the working fluid will be distributed equally among all of the tubes. Obviously, if desired, manifolds 32 and 33 may be substituted by either a single manifold or may be substituted by upper and lower support plates which seal the upper and lower ends respectively of the tubes, necessitating individual filling of each of the tubes. Fins 34 are positioned between each pair of adjacent tubes and operate in the same manner as the fins 11 described hereinabove in connection with FIGS. 1–2*a*. Each of the fins 34 is bent or otherwise formed so as to provide a corrugated or serpentine cross-sectional configuration shown best in FIG. 3*b*, with the left-hand vertical sections 34*a* being joined to the adjacent inside face of tube 31′ and the right-hand vertical sections 34*b* being joined to the confronting surface of righthand tube 31″. The horizontally aligned sections 34*c* of the fins serve as the conducting surface in much the same manner as the fins 11 described in conjunction with FIGS. 1–2*a*.

A suitable material such as, for example, an epoxy is injected into a plurality of horizontally aligned hollow spaces each of which is defined by the vertical walls of adjacent tubes 31 and the horizontal sections 34*c* of the plates 34. The filling of each of these spaces along one horizontal line collectively forms a barrier wall 35 which is equivalent to the barrier wall 13 shown in FIG. 1*a*, for example. The heat exchange unit 30 may then be used in the cooling unit of the type shown, for example, in FIGS. 2 and 2*a* when a barrier plate 36 shown in FIG. 3*a* is arranged with an opening for receiving the heat exchange unit 30 and is aligned so as to be coplanar with the barrier wall 35 formed in the manner described hereinabove. In this manner, the lower portion of the heat exchange unit is housed within the lower compartment of the heat exchange unit while the upper portion is housed within the upper compartment in much the same manner as was described in conjunction with the embodiments of FIGS. 2 and 2*a*. The functioning of the heat exchange unit of the tube and plate variety is much the same as that described hereinabove.

Whereas the plate and fin heat exchange unit of FIGS. 3 and 4*a* is described as having one or two manifold structures, it should be understood that the U-shaped tubes of FIGS. 1–2*a* may be replaced by a plurality of tubes cooperating with similarly designed upper and lower manifold members. Alternatively, each pair of tubes 31 of the tube and plate heat exchange unit 30 may be replaced by a single U-shaped tube (with the yoke of the U provided at the bottom end of the heat exchange unit). The unit of FIG. 3*a* may be modified to increase its cooling capacity in much the same manner as that described in conjunction with the cooling system of FIGS. 2 and 2*a*. For example, the vertical length of the heat pipes and corrugated fins may be increased as well as the width, the quantity of pipes and corrugations of the plates may be increased and/or the path of air moving through the upper and lower portions of the heat exchange unit may be altered so as to form a tortuous path of the type shown in FIG. 2*a*. This may be done by forming additional barrier walls similar to the barrier wall 35 and aligning such barrier walls with barrier plates of the type designated by numerals 26 and 27 in FIG. 2*a* so as to increase the velocity of the air flowing through the fins and increase heat transfer capacity under certain conditions.

It can be seen from the foregoing that the present invention provides a novel heat pipe heat exchange unit which advantageously employs tube and fin, and plate and fin heat exchange units of substantially conventional design wherein the tubes provided therein are altered so as to form heat pipe structures of highly efficient heat transfer capabilities thereby providing integral heat exchange units which are quite economical or highly efficient and which eliminate the need for separate compressor or pump units which require independent energy sources, and which are further capable of being utilized to greater advantage in applications which poses severe limits upon space requirements.

Although there have been described preferred embodiments of this novel invention, many variations and modifications will now be apparent to those skilled in the art. Therefore, this invention is to be limited not by the specific disclosure herein, but only by the appending claims.

What is claimed is:

1. A heat exchanger for cooling a region of elevated temperature comprising:

a heat exchanger enclosure having a first opening communicating with the region of elevated temperature, and a second opening spaced from said first opening and communicating with the surrounding environment;

a barrier wall having an opening and integral with said enclosure for separating said enclosure into first and second compartments isolated from one another;

a plurality of heat pipes arranged in spaced substantially parallel fashion and positioned to thermodynamically couple the first and second compartments, said plurality of heat pipes each being sealed conductive tubes enclosing a liquid of low boiling point for transferring the heat at one end of each of said plurality of heat pipes to the other respective ends of said plurality of heat pipes;

a plurality of thin thermally conductive fins each having openings for receiving associated ones of said plurality of heat pipes so as to make physical and thermal contact therewith, said plurality of fins arranged in spaced parallel fashion and aligned transverse to the longitudinal axes of said plurality of heat pipes to define a plurality of hollow regions therebetween;

means in one of said plurality of regions forming a substantially planar barrier and positioned so as to be substantially co-planar to said barrier wall to thereby position said plurality of heat pipes within the opening of said barrier wall so that a portion thereof resides in the first compartment and the other portion thereof resides in the second compartment;

means for sealing said planar barrier means to said barrier wall;

first means for drawing air through the first opening and across said plurality of fins disposed in the first compartment thereby causing the air to transfer heat to said plurality of heat pipes, and then causing the cooled air to re-enter the region of elevated temperature;

second means for drawing air from the surrounding environment through the second opening into the

second compartment and across a portion of said plurality of fins thereby causing the air to heat as it passes thereover; and

Y-shaped connector means hermetically sealing and joining at least a pair of said plurality of heat pipes at both their upper and lower ends, the third and common arm of said Y-shaped connector being provided with a coupling adapted to facilitate the filling of the joined pair of said plurality of heat pipes.

2. The apparatus of claim **1** wherein said first compartment further comprises additional barrier means for causing air entering said first compartment from said region of elevated temperature to pass through portions of said heat exchanger positioned within said first compartment in opposing directions so as to define a tortuous path from reentering said region of elevated temperature in a cooled condition.

3. The apparatus of claim **2** wherein said cpmpartment further comprises additional barrier means for causing air entering said second compartment from surrounding environment to pass through portions of said heat exchanger positioned within said second compartment in opposing directins so as to define a tortuous path before reentering the surrounding environment in a heated condition.

* * * * *