HIGH BULK WIPING PRODUCT

Filed April 29, 1968 2 Sheets-Sheet 1

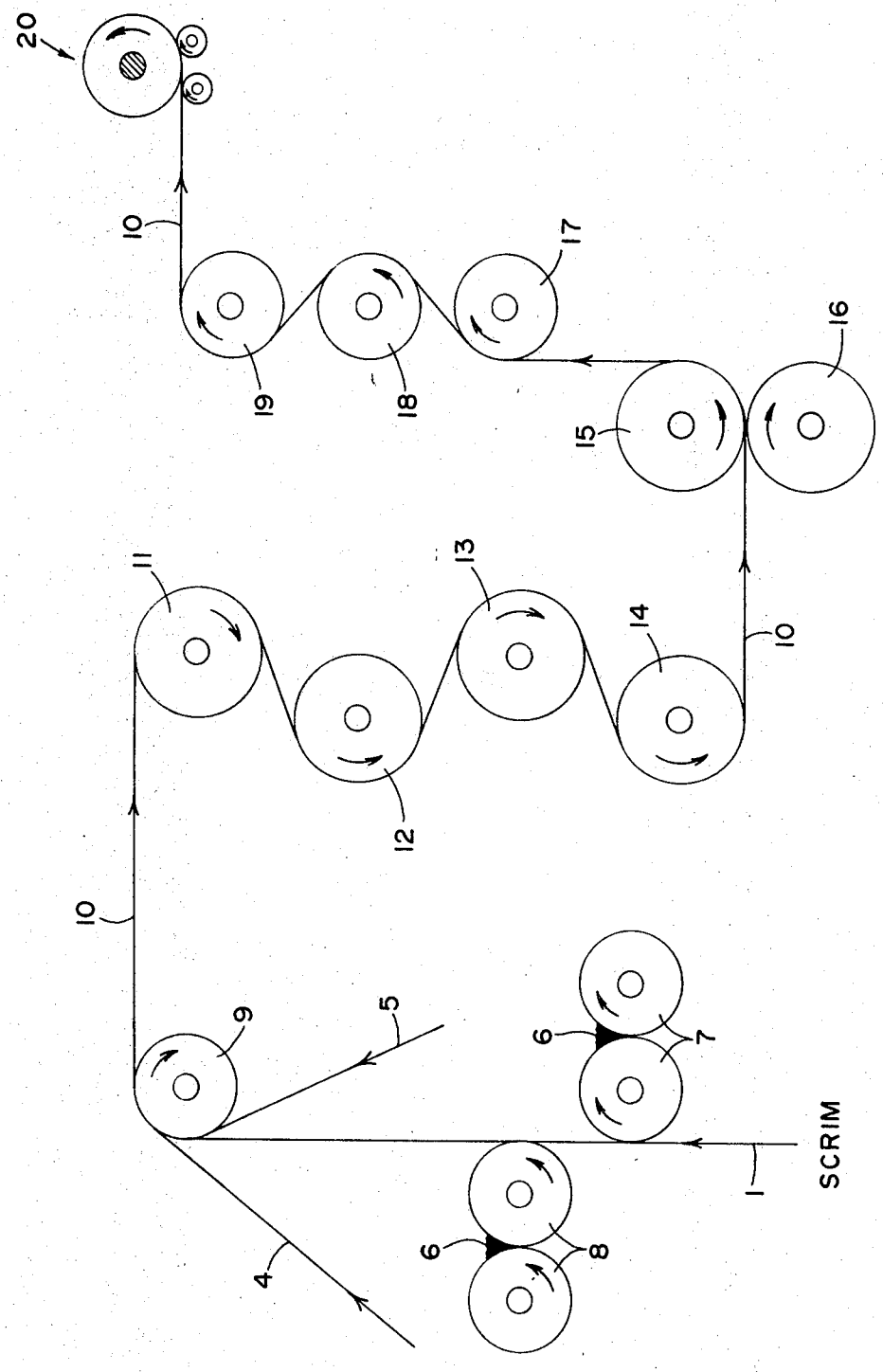

FIG. 1

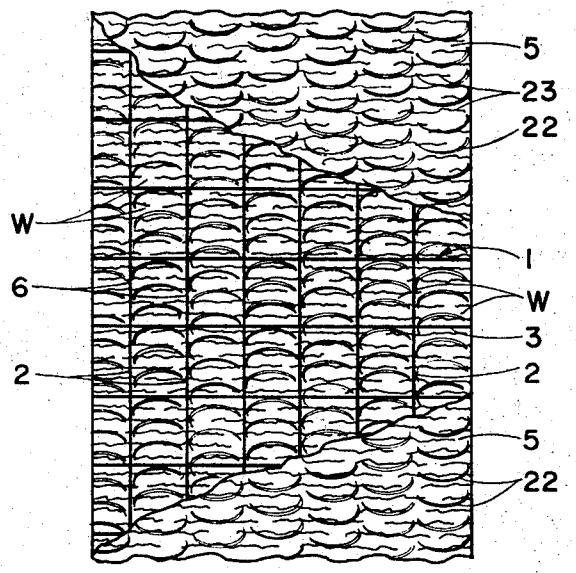

FIG. 2

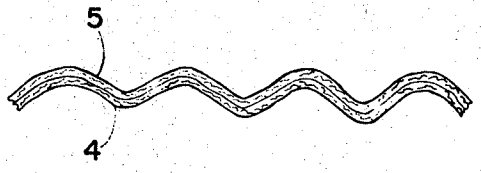

FIG. 3

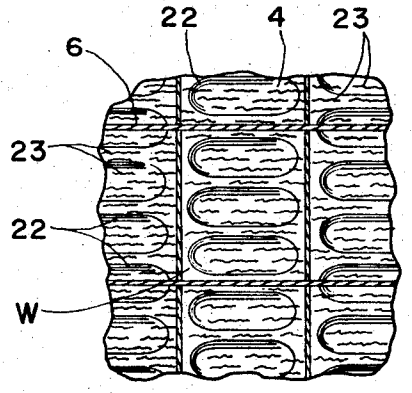

FIG. 4

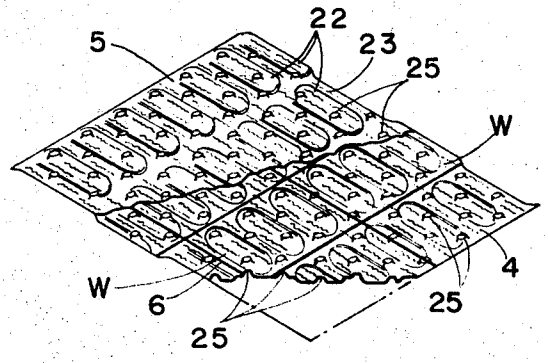

FIG. 5

United States Patent Office

3,546,056

Patented Dec. 8, 1970

1

3,546,056

HIGH BULK WIPING PRODUCT

Gordon D. Thomas, Neenah, Wis., assignor to Kimberly-Clark Corporation, Neenah, Wis., a corporation of Delaware

Filed Apr. 29, 1968, Ser. No. 725,067
Int. Cl. A47l *17/00;* B32b *5/12, 5/26*
U.S. Cl. 161—57 7 Claims

ABSTRACT OF THE DISCLOSURE

An absorbent flexible laminated sheet material in which a single ply of creped high stretch wet strengthened cellulosic wadding is carried on each side of an open mesh scrim and is secured in the composite only by adhesive on the threads of the scrim. The wadding is high stretch due to the high degree of retained crepe and therefore imparts high weight per unit area in the finished product. In a preferred modification the windows of the scrim incorporate puff zones of cellulosic wadding superimposed on the high stretch crepe structure to provide for improved characteristics particularly as to liquid absorption, dry and wet bulk, and structure toughness. In another preferred modification pin embossments provide for further improved wet and dry bulk, oil absorbency characteristics and particularly flexibility as well as providing a more roughened surface on one side of the sheet.

BACKGROUND OF THE INVENTION

Field of the invention

The invention relates to improvements in laminated sheet material particularly for use as wipes and characterized by dimensional stability overall while yet having an improved or higher degree of stretchability in localized areas to thereby impart to the web toughness, stretch, bulk and body and the like.

The invention with relation to the prior art

Scrim materials have previously been laminated with cellulose waddings for many purposes, including wipes, and are quite effective for their intended purpose. I have found, however, that by providing on each side of a scrim a single ply of wet strengthened wadding having a high degree of elongation in at least one sheet direction, the utility of the product in the area of heavy duty industrial wipes, car wash-wipes, heavy duty toweling and the like is improved. The high degree of elongation is attained essentially by compressing or creping the wadding in the direction in which it is to elongate and retaining that crepe very largely in the product. This effectively provides a high basis weight sheet on each side of the scrim in the final product. The only adhesive binding the sheet into the product is that carried by the scrim. Consequently, the high basis weight sheet zones within the windows formed by the scrim is free of adhesive. Additionally, the basis weight of the creped sheet is such relative to the adhesive which bonds the scrim fibers to the sheet that no significant quantity of adhesive penetrates the sheet even at such adhesive carrying areas.

For my purposes I employ a sheet which, as it exists in the wipe product, has a basis weight of between about 15 and 50 pounds per 2880 square feet and has an elongation or stretch at break in one sheet direction of at least 70% and up to about 150% based on the scrim length to which the sheet is secured; that is, the wadding in the finished product is creped to such extent that the wadding itself would have the capability to stretch out at least 70% more than its actual length in the product. Preferably, this stretch at break is between 100 and 120%; too

2

high a stretch characteristic leads to poor control in manufacturing and converting operations while too low a stretch limits the ability of the sheet as to both energy and liquid absorption. It is to be further noted that a stretch at break of 100% based on the scrim length or its own crepe length corresponds to a crepe ratio of 2:1 and that such creped product is often characterized as being stretchable to 200% its own creped length.

The material forming the scrim may be any synthetic fiber which is suitably flexible and substantialy retains its strength when wetted by water, oil and the like. Useful scrim materials include nylon, polypropylene and the polyesters. I prefer nylon material as it is readily available at relatively low cost, shrinks in the course of the process to provide in the crepe structure of the single ply sheet material puff zones superposed on the crepe structure and limited in extent by the windows of the scrim. The polyesters, while useful, should be of a greater denier than a nylon scrim to attain comparable strength in the product; similarly, the polypropylenes, while useful, lack the strength imparting characteristics of the nylon for my purpose. In general, the threads of the scrim may be composed of filaments having a denier of about 1.5 to about 15 and the threads most suitably have a denier of about 40 to about 100; with nylon a filament denier of about 3 to 5 is preferred at a thread denier of about 70. The crossed threads should form windows in the scrim of at least about ¼″ on a side; an upper limit appears to be about 1″ per side. Too large a window opening de-emphasizes the effect of the threads of the scrim; too small a window opening increases product stiffness and limits web expansion upon wetting. Windows of about ⅓″ to ½″ on a side are preferred for most purposes.

SUMMARY

It is, accordingly, a primary object of this invention to provide a low cost cellulosic product of substantial strength and overall dimensional stability which is particularly characterized by a single ply of relatively high basis weight, high stretch wet strengthened creped wadding secured on opposed sides of a scrim and retained only by the scrim. Such scrim may be retractable to superimpose on wadding within windows of the scrim a puff web zone to further improve product toughness, dry and wet bulk and the like.

BRIEF DESCRIPTION OF THE DRAWINGS

The invention will be more fully understood by reference to the following detailed instruction and accompanying drawings wherein:

FIG. 1 is a diagrammatic illustration of an apparatus arrangement for carrying out the procedure of the invention;

FIG. 2 is a view in plan on an enlarged scale of sheet material in accordance with the invention having one ply of wadding partially removed to illustrate the cooperation between the very open net-like scrim and the cellulosic wadding;

FIG. 3 is a view somewhat idealized and on an enlarged scale illustrating the edge contour of a product such as is illustrated in FIG. 2;

FIG. 4 is an enlarged view of a portion of the structure of FIG. 2; and

FIG. 5 is a view of a further embodiment of the product of the invention illustrating pin embossments.

DESCRIPTION OF PREFERRED EMBODIMENTS

The sheet material illustrated in FIG. 2 comprises a scrim designated generally by the numeral **1** and composed of longitudinally extending threads **2** of nylon and transversely extending threads **3** also of nylon. The threads

have a denier of about 70 and are composed of filaments of a denier of about 3. The sheet material (FIG. 3) includes a lower creped tissue web **4** and an upper creped tissue web **5**, a portion of which upper tissue has been removed in FIG. 2.

The sheet material illustrated in FIG. 2 is conveniently produced on equipment shown in FIG. 1. As shown in FIG. 1, the scrim **1** is directed to coating applicators adapted for applying an adhesive composition to the scrim. The adhesive **6** is applied to each side of the scrim by successively positioned roll applicators **7**, **8** functioning in known manner, the rotational direction of the applicator rolls being indicated by the arrows. The scrim, wet with adhesive, is directed to guide roll **9** and is there combined with the wadding or crepe tissue webs **4**, **5**.

The crepe tissue webs are formed in conventional manner, that is, on a conventional paper machine having a Yankee dryer from which each web is creped. Each web is commonly of the same structure and, accordingly herein, the specific description will apply to each of webs **4**, **5**. The webs are wet strengthened in known manner by the inclusion of about 0.5% based on the dry fiber weight of a conventional commercially available wet strength agent, a polyamide-polyamine-epichlorohydrin. The tissue of about 12.5 pounds drier basis weight (uncreped, per 2880 sq. ft.) is highly creped on a Yankee dryer in known manner to a crepe ratio of about 2.5 to 1. By this is meant that a given length of the creped sheet as it comes from the creping blade of the dryer may be pulled out to about 250% of its own creped length or, stated somewhat differently, the creped basis weight as it leaves the dryer creping blade is about 31 pounds or 2.5 times greater than the dried basis weight, that is, the uncreped basis weight on the dryer before creping. In general and usual practice, the crepe web off the dryer is commonly pulled out to largely decrease its stretchability; in the present instance, however, effort is made to retain the crepe or stretch characteristic in the final product through the procedure now described; nevertheless, some small amount of stretchability is usually lost in handling operations, including re-rolling and the like.

The combination of sheet **4**, **5** with the adhesive carrying scrim is effected in the absence of substantial pressure at roll **9**. Pressing is avoided to minimize loss of stretch. The composite, that is, the lightly adhered combination of the two creped tissue webs **4**, **5** and the scrim **1**, is conveniently indicated by the numeral **10** in FIG. 1. This composite is directed over a series of pre-heated rolls designated by the numerals **11**, **12**, **13** and **14**. Minimum tension necessary to passage of the composite over the rolls is applied.

The pre-heat rolls operate at a temperature of about 300–320° F. and serve to provide the adhesive which, in the present instance, is a plastisol, in a plastic condition for calendering as now noted. From the pre-heat rolls the composite **10** passes to calender rolls **15**, **16** which exert a sufficient pressure on the composite to serve to bond the scrim to the wadding plies. Roll **16** is heated like the pre-heat rolls to maintain web temperature during lamination; roll **15** is a calender roll, paper filled or the like. The composite **10** passes to the cooling rolls **17**, **18** and **19** and is then directed to a wind-up generally indicated at **20**.

I prefer to employ as the adhesive **6** a conventional plastisol and the equipment arrangement of FIG. 1 contemplates such adhesive. In the specific application the plastisol used consisted of 100 parts of polyvinyl chloride dispersed in 60 parts by weight of diisodecyl phthalate. The adhesive viscosity, Brookfield, measured with a No. 4 spindle at 20 r.p.m., was about 500 centipoises; a small clearance, about 0.004", existed between the applicator rolls retaining the plastisol, and it was applied as a wet film. This film was completely set and retained the wadding plies to the scrim as the composite **10** passed over the cooling rolls. The wadding plies **4**, **5** were free of adhesive other than at the lines of contact with the scrim.

The creped wadding plies, as noted, tend to lose some stretchability in processing and in the product, as illustrated in FIG. 2, each had a basis weight due to the crepe structure of about 25 pounds per 2880 sq. ft.; this corresponded to a drier basis weight (uncreped per 2880 sq. ft.) of about 12.5 pounds. Thus, the crepe retained was at a ratio of about 2:1 and the amount of stretch or extensibility at break based on scrim length in the product or its own crepe length was about 100%.

The scrim, composed of nylon threads, has about 3 threads per inch in the longitudinal direction and about 2½ threads per inch in the transverse direction, thus providing quite open windows designated (FIG. 2) by the letter W. I prefer nylon as it provides for toughness in the product and at low denier gives good strength; also, nylon appears to tend to shrink considerably in passage over the pre-heating rolls **11**, **12**, **13** and **14**; however, the nylon is prevented from shrinking immediately by the tension of the draw. After calender lamination and the securing of the nylon to the webs, the nylon, when tension is lowered, shrinks significantly causing the composite to pucker or bulk considerably. This bulking of the web by the snap-back effect is superimposed on the crepe **22** and causes the bulking to be confined to the window areas or zones W. The puff zones designated at **23** are clearly distinct from the crepe lines **22**, and the puff zones extend between longitudinally projecting threads **2**, and are, in fact, terminated by the threads. More than one puff zone may lie within one window area and, commonly, at least two puff zones lie in adjacent relation within a window (FIG. 2). These puff zones provide for an additional built-in localized elongation characteristic and materially contribute to the toughness, flexibility, dimensional stability and general workability of the sheet material.

As shown in FIG. 3, the sheet material, when viewed edgewise, is composed of corrugations which present a somewhat irregular configuration to the eye. In both the matter of depth of corrugation and distance between corrugations this provides for a relatively rough surface capable of exerting good cleansing action.

For the purpose of providing a more flexible product having an improved oil absorbent capacity, I prefer to provide the product with pin embossments as shown at **25** in FIG. 5. The pin embossments extend from one side of the sheet material to the other and intersect the crepe structure as well as the puff zones. In the specific embodiment shown in FIG. 5 approximately 8 pin embossments are provided in each window W. Therefore, approximately 8 projections extend from each window area providing a great multiplicity of small protuberances which are effective to exert an improved cleansing action in many instances. The provision of the protuberances, in addition to the rendering of the webs more soft and flexible by the pin embossing action, permits the product of FIG. 5 to be employed in close spaces more suitably than the product of FIG. 2. However, for wiping oil from surfaces, the second and smoother side is preferred as it permits close contact with the oil bearing surface and has indentations which appear to aid the rate of oil pick-up.

As many apparently widely different embodiments of this invention may be made without departing from the spirit and scope thereof, it is to be understood that I do not limit myself to the specific embodiments thereof except as defined in the appended claims.

I claim:

1. An absorbent, flexible, tough laminated wiping sheet material comprising a non-woven open mesh relatively low stretch scrim of crossed threads forming windows in the scrim of at least about ¼" on a side and up to about 1", and a single ply of a wet strengthened creped wadding web secured on each side of said scrim to said scrim in fixed engagement with the threads and closing

the windows of the scrim from opposite sides of the scrim, said creped wadding webs being otherwise free of the scrim and of each other and having in the creped condition in the laminated wiping sheet material a basis weight of between about 15 and 50 pounds per 2880 square feet and a stretch at break in one direction of at least 70% and up to about 150% based on the length of scrim to which the webs are secured.

2. A laminated wiping sheet material according to claim **1** in which the threads of the scrim are of heat shrinkable material and the creped webs have in the windows a plurality of puff web zones superposed on and extending in the same sheet direction as the crepe, thereby increasing the stretchability of the webs over that contributed by the crepe, said puff web zones being terminated within the windows by threads of the scrim.

3. A laminated wiping sheet material according to claim **2** in which the threads are composed of filaments having a denier of between about 1.5 to about 15, said threads have a denier of between about 40 to about 100, and the crepe webs have a stretch at break in one web direction of between about 100 and 120% based on the length of scrim to which the webs are secured.

4. A laminated sheet material according to claim **3** in which the sheet material has pin embossments extending therethrough projecting from and roughening one side of the material.

5. A laminated sheet material according to claim **2** in which the sheet material has pin embossments extending therethrough intersecting the puff web zones.

6. A laminated sheet material according to claim **1** in which the adhesive carried on the scrim secures the scrim to the creped wadding webs, said material being otherwise free of adhesive.

7. A laminated sheet material according to claim **6** in which the adhesive on the scrim is confined to the inner side of the creped wadding webs and the outer side of such webs is free of adhesive.

References Cited

UNITED STATES PATENTS

2,625,648	4/1953	Foster	161—73X
2,982,680	5/1961	Ellis et al.	161—129X
3,025,199	3/1962	Harwood	161—129X
3,072,511	1/1963	Harwood	161—85
3,424,643	1/1969	Lewis et al.	161—136X

ROBERT F. BURNETT, Primary Examiner

W. A. POWELL, Assistant Examiner

U.S. Cl. X.R.

15—209; 156—85, 179; 161—129, 133