G. B. KOHLER.

FARE BOX.

APPLICATION FILED FEB. 1, 1909.

1,068,782. Patented July 29, 1913.

2 SHEETS—SHEET 1.

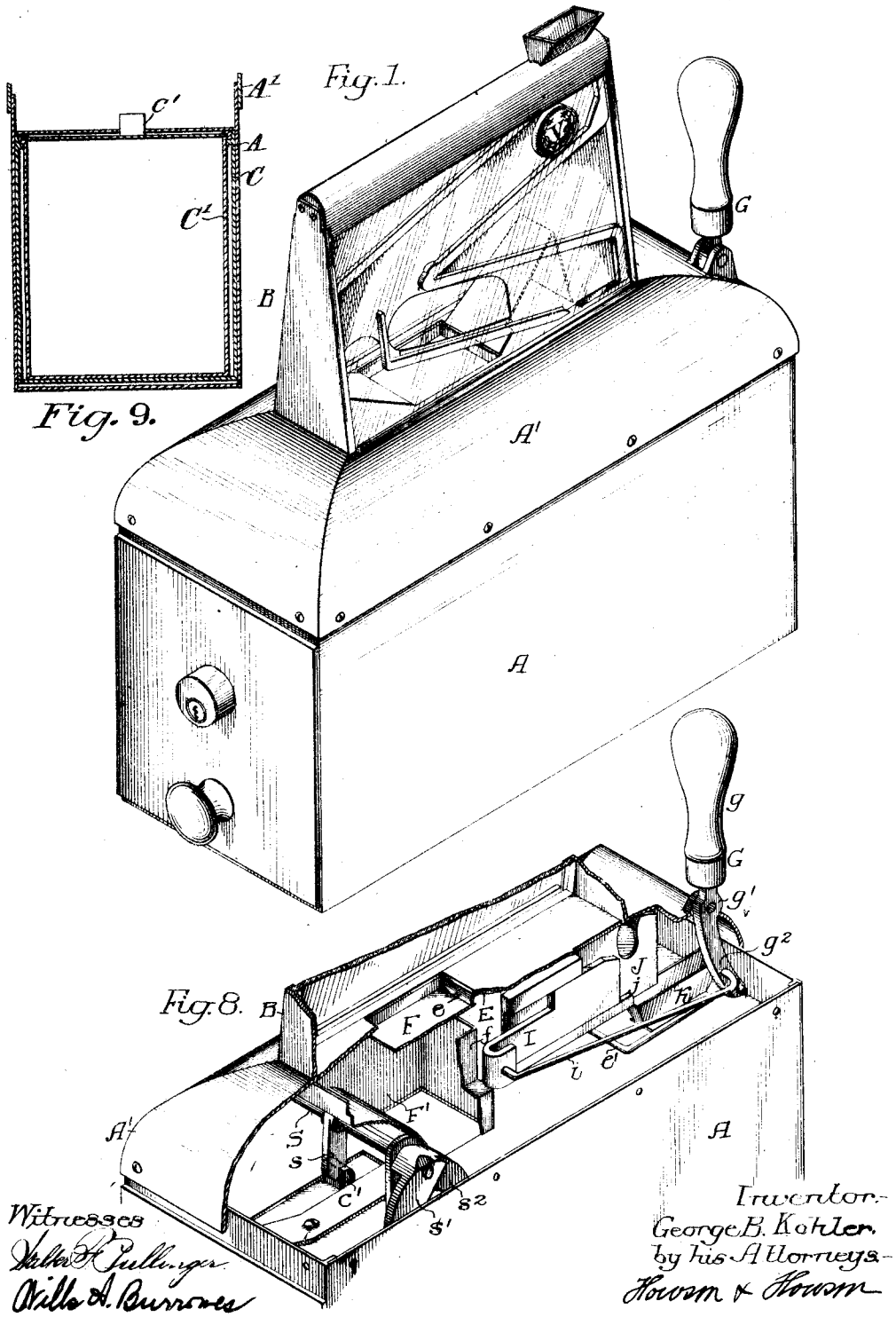

Witnesses
Walter F. Pullinger
Willis A. Burrows

Inventor.
George B. Kohler.
by his Attorneys.
Howson & Howson

G. B. KOHLER.

FARE BOX.

APPLICATION FILED FEB. 1, 1909.

1,068,782. Patented July 29, 1913.

2 SHEETS—SHEET 2.

Fig. 3.

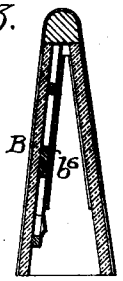

Fig. 3a.

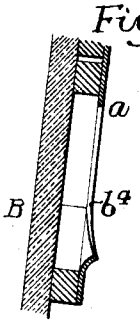

Fig. 2.

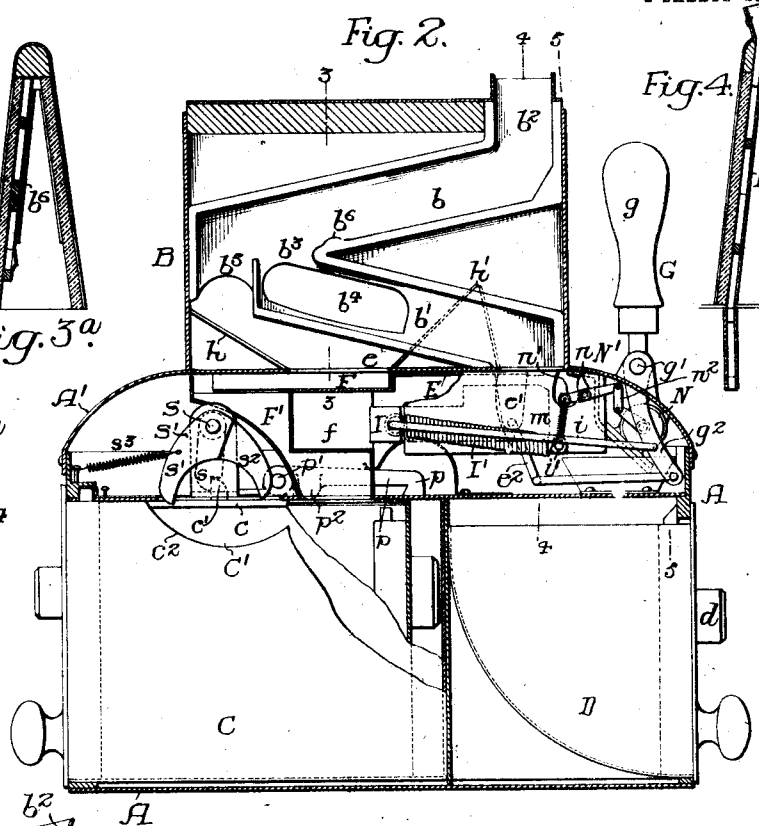

Fig. 4.

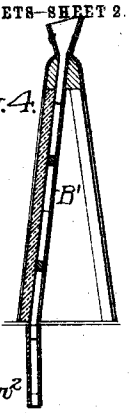

Fig. 5.

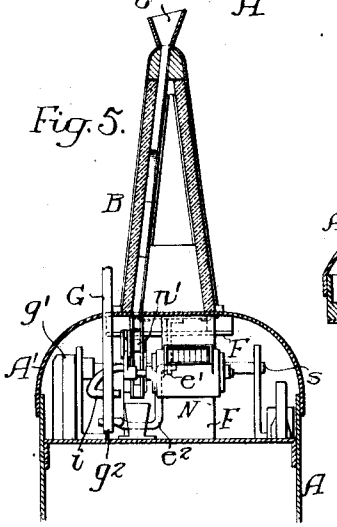

Fig. 6.

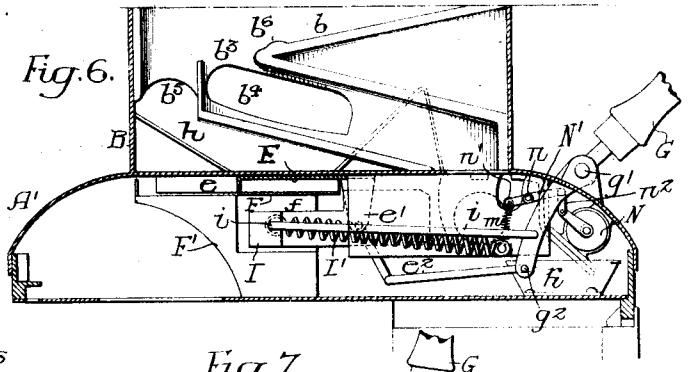

Fig. 7.

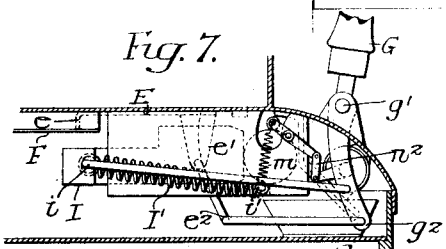

Witnesses.

Walter F. Pullinger.

Wills A. Burrows

Inventor:

George B. Kohler.

by his Attorneys.

Howson & Howson

UNITED STATES PATENT OFFICE.

GEORGE B. KOHLER, OF PHILADELPHIA, PENNSYLVANIA, ASSIGNOR TO THE J. G. BRILL COMPANY, OF PHILADELPHIA, PENNSYLVANIA, A CORPORATION OF PENNSYLVANIA.

FARE-BOX.

1,068,782. Specification of Letters Patent. Patented July 29, 1913.

Application filed February 1, 1909. Serial No. 475,414.

To all whom it may concern:

Be it known that I, GEORGE B. KOHLER, a citizen of the United States, residing in Philadelphia, Pennsylvania, have invented certain Improvements in Fare-Boxes, of which the following is a specification.

My invention relates to certain improvements in fare boxes used particularly on passenger cars and passenger railway stations where the fare is delivered as the passenger reaches the platform. The invention, however, can be used in any place where coins are collected or an admission charged.

The object of my invention is to so construct a fare box that fares of certain denominations will be separated from others and these particular fares can be used by the conductor in making change.

My invention relates further to certain details of construction which will be fully described hereafter.

In the accompanying drawings:—Figure 1, is a perspective view of my improved fare box; Fig. 2, is a vertical sectional view; Fig. 3, is a transverse sectional view of the fare receiving section on the line 3—3, Fig. 2; Fig. 3^a is an enlarged sectional view of a portion of Fig. 3; Fig. 4, is a transverse sectional view of the fare receiving section on the line 4—4, Fig. 2; Fig. 5, is a transverse sectional view on the line 5—5, Fig. 2; Fig. 6, is a view of a portion of the box showing the operating handle shifted so as to drop the coin in position to actuate the registering mechanism; Fig. 7, is a diagram view showing the coin in the act of actuating the mechanism; Fig. 8, is a sectional perspective view of a portion of the fare box, and Fig. 9, is a transverse sectional view on the line 9—9, Fig. 2.

A is the body of the box having a cover section A′ from which projects the fare receiving section B. In the body of the box are two drawers C and D in the present instance, each provided with a lock and each capable of being withdrawn for the purpose of removing the fares collected therein.

The drawer D can be opened by the conductor and the money collected in this drawer can be used in making change, whereas the drawer C is preferably provided with a box C′ into which all coins, with the exceptions of the ones deflected into the drawer D, are collected, and this drawer C can only be opened by the proper person, from the office of the company, for instance, who removes the box C′.

The coin deposited in the drawer C is not registered but the coin deposited in the drawer D and which is used by the conductor is registered as it passes from the fare receiving section into the drawer.

While I have illustrated a drawer D in the present instance, a cavity may be formed in the fare box closed by a door, which would be the equivalent of the drawer shown. The bottom of the drawer is so shaped that the coin can be readily removed from the drawer.

In the fare receiving section B are two inclined ways b, b', the upper end of the way b communicates with the hopper b^6 in which the coin is placed and the way b' communicates with the way b through the throat b^3, so that any coin rolling down the way b will drop onto the way b'. The two ways are inclined in opposite directions and the inclination is sufficient to allow the coin to freely roll into position.

It will be noticed, in referring to Figs. 3 and 4, that the ways b, b' are very narrow, being only of sufficient width to allow a coin to pass freely through them, and there is an opening b^4 in one side wall of the way b', this opening being of such size in the present instance as to allow a five cent piece to freely pass through both ways into position to actuate a registering mechanism, whereas smaller coins, such as pennies and ten cent pieces, will fall out of the chute through a lateral opening b^4 onto a platform F. There is also a throat b^5 directly back of the throat b^3 communicating with the passage to the box C′ and there is a hump b^6 on the way b which acts to retard the movement of the coins passing down the way before entering the throat b^3.

If a coin should jump over the throat b^3 it will pass into the throat b^5 and find its way onto the platform F, so that it will be seen by the above described arrangement that all coins will be separated from the five cent pieces and pass onto the platform F to be finally discharged into the box C′, while the five cent pieces will pass into the drawer D.

G is an operating lever pivoted at g' to lugs on the box and this operating lever has a suitable handle g on an arm g^2 extending into the box.

E is a slide adapted to pass over the platform F and this slide has a projecting flange e forming a plunger so as to push any coins deposited onto the platform F into the chute F′ which communicates with the box C′. The slide extends a sufficient distance forward to close the outlet of the way b' and retain the coin in the way until the lever is actuated. Projecting from the bottom of the slide E is a lug e' and this lug is connected to the arm g^2 of the operating lever by a link e^2.

I is a slide retained in normal position, as shown in Fig. 1, by a spring I′, which is attached to the rear of the slide and to a pin i' on the fixed portion of the box. The slide I is connected to the arm g^2 of the operating lever G by a rod i. The purpose of this slide is to engage the coin and force it to actuate the registering mechanism. The rear end of the slide I is adapted to a cavity f in the frame forming the chute F′, so that there is no communication between one portion of the box and the other.

N is a register having a series of disks of the ordinary form and these disks are exposed through the glazed section of the casing of the box. The register is actuated by the coin and pivoted at n to a lever N′ having a roller n' one one arm; the other arm is connected by a link n^2 to an arm on the registering device. A spring m tends to hold the lever N′ in the position illustrated in Fig. 2 so that the roller n' will be in the path of the coin.

As the coin passes into the casing J in which the slide I is mounted the return movement of the slide will cause it to force the roller end of the lever N′ up so as to allow the coin to pass under it, as in Fig. 7, and the continued movement of the slide I will discharge the coin over the edge j of the casing into the hopper k which communicates directly with the conductor's change drawer D. The registering mechanism in the meantime being moved to register the passage of one coin. On each movement of the operating lever the slide E will move so as to allow a five cent piece to drop into operating position if one is on the way b' and discharge any coin resting on the platform F.

It will be noticed that the ways b, b' are arranged on one side of the tapered fare receiving section so that the coins will travel in contact with the side plate B′ and when a coin of smaller size than a five cent piece reaches the opening b^4 in the side plate B′ it will simply tip over out of the way b' and drop onto the platform F. Guides h, h' are so arranged as to direct the coins onto the platform.

The box C′ which is mounted in the drawer C has an opening in the top closed by a sliding lid c having a lug c', and on the shaft S is an arm s adapted to engage the lug, as shown by dotted lines in Fig. 2, and also on the shaft is a U-shaped arm S′ having fingers s'—s^2. The arm s^2 rests on the top of the box, while the arm s' is free to turn in the recess c^2 in the drawer. A spring s^3 is connected to the arm s' so that when the drawer is pulled out to the full extent, the arm s^2 will drop back of the box and the arm s will be clear of the lug c' on the sliding lid, which has been closed by the lug coming in contact with the arm and locked. The box can then be removed from the drawer.

When the box is closed the lug c' contacts with the arm s and turns the shaft S until the lug passes the arm, when the shaft will spring back due to the tension on the spring s^3, and the arm will rest in front of the lug, as shown in Fig. 2, while the finger s^2 will rest directly upon the box, preventing movement of the arm s in one direction so that the slide must be closed and locked before the drawer can be fully opened, as described above. After the box is removed from the drawer, it can be opened by the proper key.

P is an arm having a projection p which drops back of the drawer C and prevents the drawer being closed when the box is not in place within the drawer. This arm is pivoted at p' to the body of the fare box and has a projection p^2 in the path of the box C′, so that when the box is within the drawer this projection lifts the arm P and holds the projection p out of the path of the drawer.

I claim:

1. The combination in a fare box, of a fare receiving section having ways for the coins to travel, means for causing certain coins to be separated from other coins, two receptacles, one for the selected coins and the other for the coins from which they have been separated, a platform upon which said selected coins rest, a plunger closing the ways and acting to discharge said coins from the platform upon its reciprocation, a second plunger, an operating lever for actuating both plungers, said lever pushing back the second plunger so as to allow the coins to drop in front of said plunger, and registering means in the path of the selected coins, said registering means being actuated on the forward movement of the said second plunger.

2. The combination in a fare box, of a coin receiving section having inclined ways upon which the coins travel, means for deflecting coins less than a dime from said ways, two drawers, one drawer arranged to receive the deflected coins and the other drawer arranged to receive the selected coins, a fare box in the drawer receiving the deflected coins, registering mechanism lo-

cated in the path of the selected coins so that the said coins will be registered before they pass into the drawer, with means for closing the opening in the fare receptacle and locking said closing means before the drawer containing the receptacle is removed from the fare box.

3. The combination in a fare box, a fare receiving section having two ways inclined in opposite directions one above the other, a throat connecting the ways, a hump in the upper way in front of the throat, a second throat back of the first mentioned throat and operating so as to allow coins less than a given diameter to be deflected from the lower way, registering mechanism, two compartments, means for directing the deflected coins into one compartment, and means for directing the other coins into the path of the registering mechanism and into the other compartment.

4. The combination in a fare box, of a fare receiving section, ways in the said fare receiving section, means for deflecting coins less than a given diameter, two compartments, a platform on which the deflected coins drop, a slide, an operating lever connected to the slide, said slide adapted to close the ways and to push the deflected coins off the platform, a chute for directing the coins into one of the compartments, a second slide, a spring for returning said slide to its normal position, a connection between said slide and the operating lever, a casing for the said slide into which the selected coin drops when the slides are pushed back, a lever normally in the path of the said coin, a registering mechanism, and means connecting said registering mechanism with said lever, so that when the coin is pushed forward by the slide, due to the action of the spring, it will operate the registering mechanism.

In testimony whereof, I have signed my name to this specification, in the presence of two subscribing witnesses.

GEORGE B. KOHLER.

Witnesses:

JNO. J. GASTLAN,

HENRY C. ESLING.