Jan. 2, 1923. 1,440,815.

A. K. BONTA.

STARTER FOR COMBUSTION ENGINES.

FILED APR. 12, 1919. 3 SHEETS—SHEET 1.

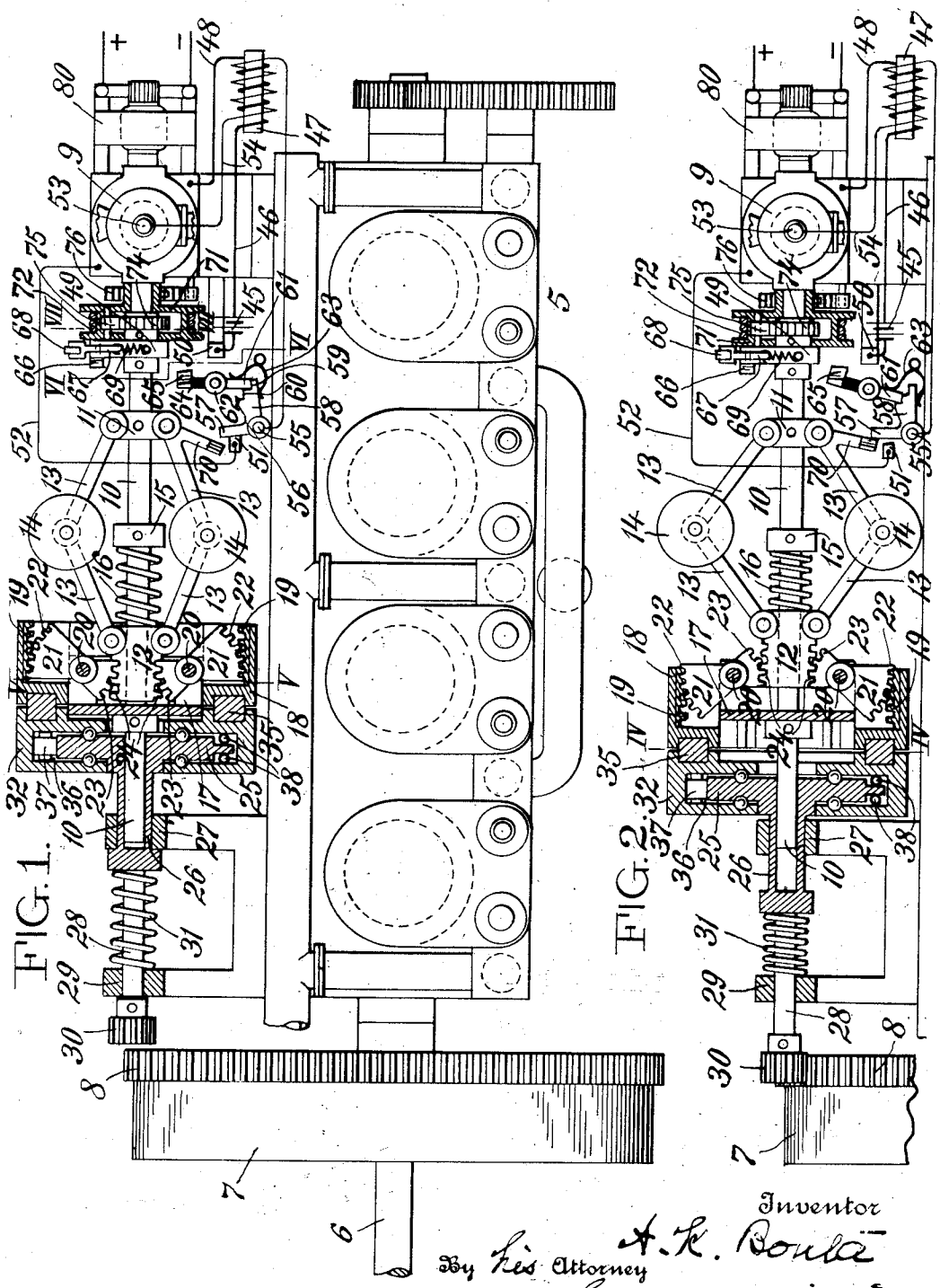

FIG. 1.

FIG. 2.

Inventor
A. K. Bonta
By his Attorney
Geo. N. Benjamin

Jan. 2, 1923. 1,440,815.

A. K. BONTA.

STARTER FOR COMBUSTION ENGINES.

FILED APR. 12, 1919. 3 SHEETS—SHEET 2.

FIG. 3.

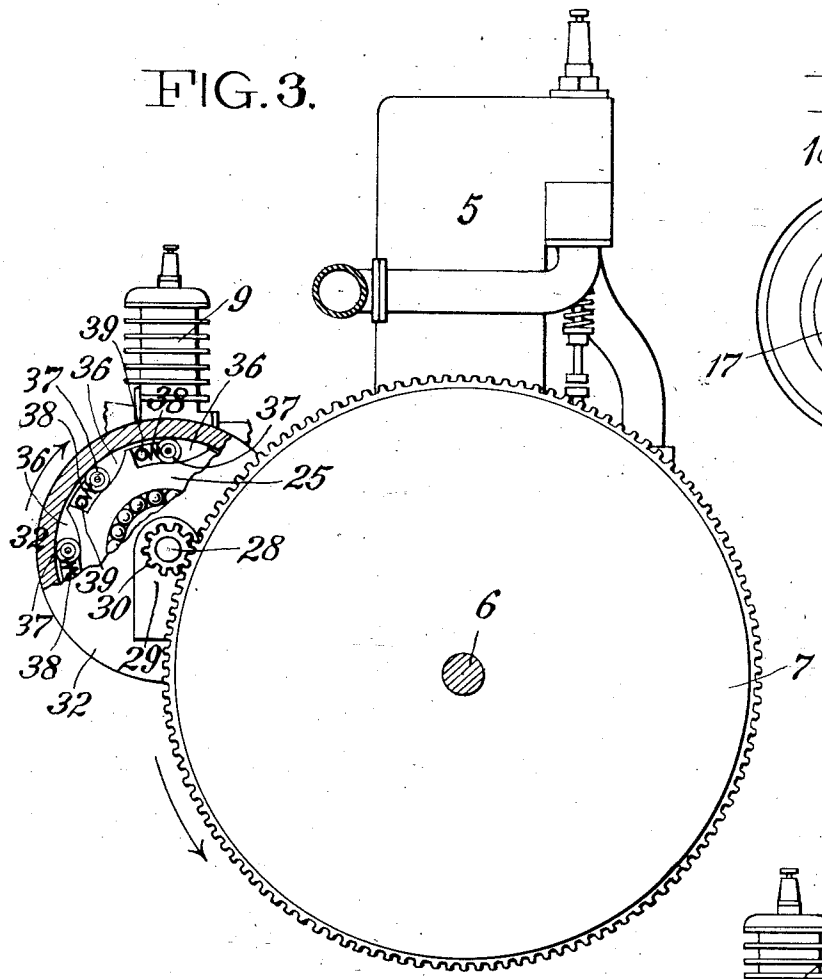

FIG. 4.

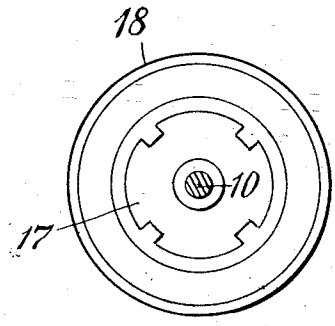

FIG. 6.

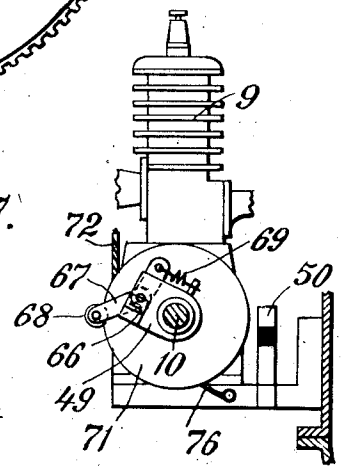

FIG. 7.

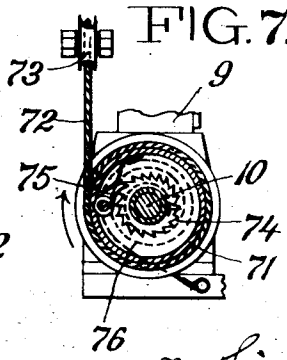

FIG. 5.

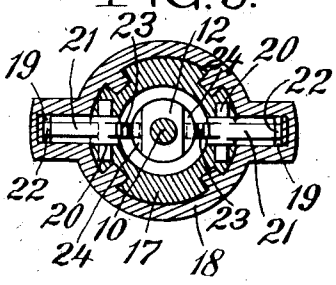

Inventor

A. K. Bonta

By his Attorney

Geo. H. Benjamin

Jan. 2, 1923. 1,440,815.

A. K. BONTA.

STARTER FOR COMBUSTION ENGINES.

FILED APR. 12, 1919. 3 SHEETS—SHEET 3.

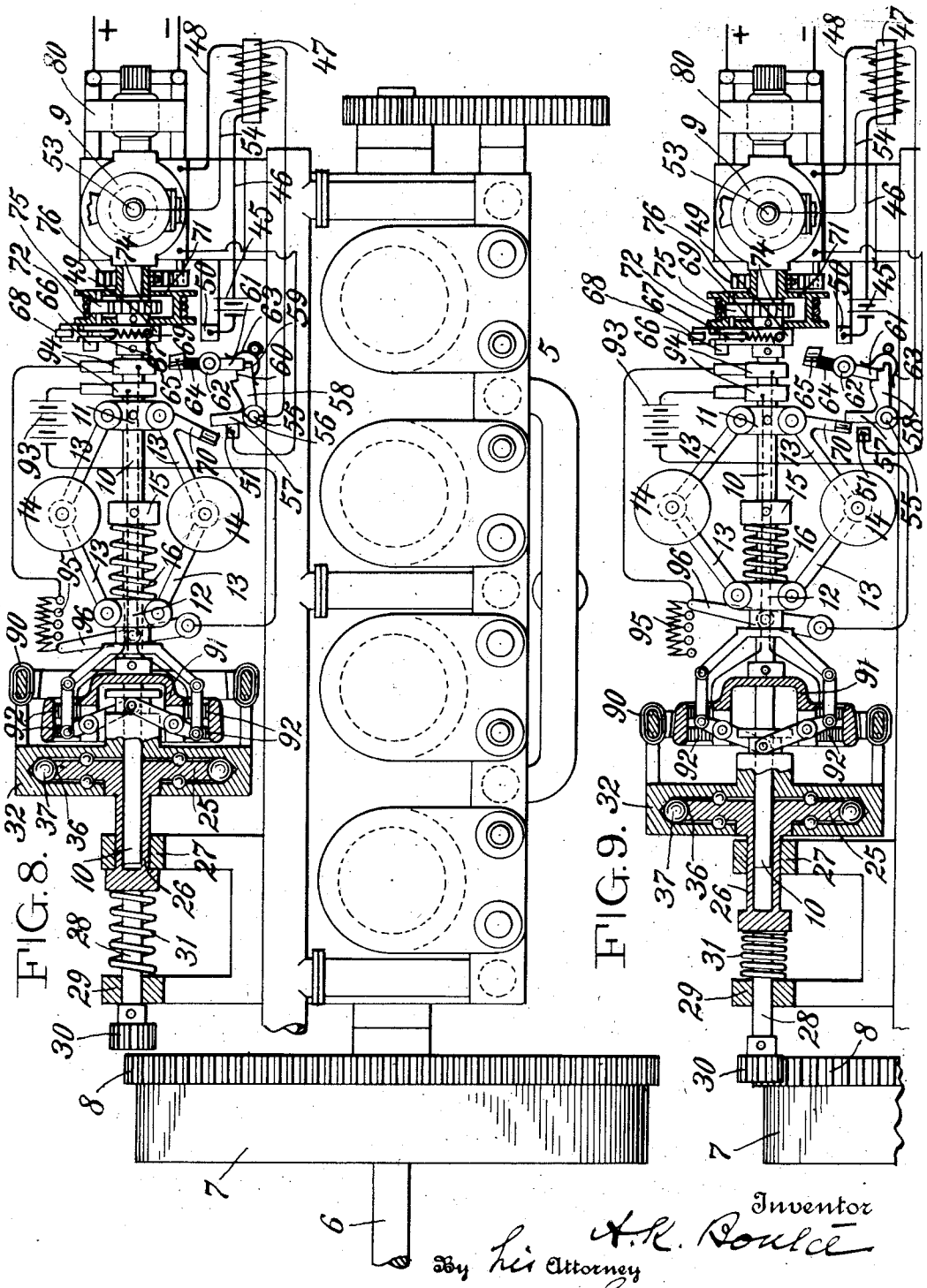

Inventor
A. K. Bonta
By his Attorney
Geo. H. Beckmann

Patented Jan. 2, 1923.

1,440,815

UNITED STATES PATENT OFFICE.

ARTHUR KNOX BONTA, OF NEW YORK, N. Y.; MARY W. BONTA EXECUTRIX OF SAID ARTHUR KNOX BONTA, DECEASED.

STARTER FOR COMBUSTION ENGINES.

Application filed April 12, 1919. Serial No. 289,597.

To all whom it may concern:

Be it known that I, ARTHUR KNOX BONTA, a citizen of the United States, residing at New York, in the county and State of New York, have invented certain new and useful Improvements in Starters for Combustion Engines, of which the following is a specification.

My invention consists in a starter for combustion engines, and the object of my invention is a device operated from a small combustion engine, which will throw a large combustion engine into operation, and then automatically be thrown out of relation with the large combustion engine, when the large combustion engine reaches a definite speed, and further, a device which, in case a large combustion engine is rendered inoperative as a propelling means, for instance, for an automobile, will, acting through the small combustion engine, impart motion to such automobile.

Heretofore starters have been operated by means of a storage battery, coiled springs, or similar devices, all of which practice has shown to be unreliable. The starter described and claimed in this specification, makes use of instrumentalities which practice has shown to be not only entirely reliable, but economical in use and presenting advantages over any other form of starter.

The accompanying drawings will serve to illustrate my invention, in which:

Fig. 1 is a plan view of a combustion engine and its associated parts, with the starter shown in longitudinal horizontal section.

Fig. 2 is a longitudinal horizontal section of the starter with the parts shown in the position which they will occupy with the starter in relation with a large combustion engine.

Fig. 3 is an end elevation looking from the left of Fig. 1, with a portion of the starter in vertical section.

Fig. 4 is a section on the line IV—IV of Fig. 2.

Fig. 5 is a section on the line V—V of Fig. 1.

Fig. 6 is an elevation of the small combustion engine and starter and associated parts, taken on the line VI—VI of Fig. 1.

Fig. 7 is a vertical section taken on the line VII—VII of Fig. 1.

Fig. 8 is a view corresponding to Fig. 1 but showing an electric means for actuating a portion of the starter instead of the mechanical means shown in Fig. 1.

Fig. 9 is a view corresponding to Fig. 2, illustrating the second position of the starting means shown in Fig. 8.

Referring to the drawings: 5 indicates a combustion engine of any type, such as may be employed to drive an automobile or other device. Mounted on the driving shaft 6 of this engine, is a fly wheel 7, on which is a gear 8. 9 is a small combustion engine, represented in the drawings as a two cycle engine. This engine, however, may be of any type. This engine, when set in motion, is adapted to drive a shaft 10. Secured to this shaft is a sleeve 11. Loosely mounted on the shaft 10 and adapted to be given longitudinal motion is a sleeve 12. Pivotally connected to the sleeves 11 and 12 and to each other, are the arms 13, and mounted on the central pivotal connections are balls 14, the general arrangement being that of a ball governor. Connected to the shaft 10 is a stop sleeve 15, and situated between the sleeve 12 and stop 15, is a spring 16 which normally tends to push the sleeve 12 to the left. It will be understood that when the shaft 10 is rotated, the balls 14 will be thrown out by centrifugal force, which will tend to move the sleeve 12 to the right as against the pressure of the springs 16. Mounted on the shaft 10, is a large sleeve 17. The sleeve 17 is arranged to rotate with the shaft 10. Arranged over the periphery of this sleeve and designed to move longitudinally thereon, is an annular ring 18 provided on its inner periphery with a toothed rack 19. Pivoted at 20 in the sleeve 17, are gear segments 21. These segments have two sets of teeth, 22 and 23. The teeth 22 cooperate with the teeth on the rack 19 on the inner periphery of the ring 18, and the teeth 23 with the teeth on rack 24 on the outer periphery of the sleeve 12. It will now be understood that when the balls 14 are thrown out, the sleeve 12 will be drawn to the right, and the annular ring 18 moved to the left.

Loosely mounted on shaft 10 is a disc 25. The disc is provided with a forward tubular extension 26 which is situated in a bearing 27. This tubular extension is hollow and acts as a bearing for the left hand end of the shaft 10. Connected to the extension 26 is a shaft 28. The forward end of this shaft

is mounted in bearing 29, and carries a pinion 30 adapted to mesh with gear 8 on fly wheel 7. Situated between the forward end of the extension 26 and the bearing 29, is a spring 31 which normally tends to push the extension 26 and disc 25 to the right and to disengage the pinion 30 from the gear 8.

Surrounding the disc 25 is a hollow disc 32. Situated in recesses in the opposing faces of the annular ring 18 and the disc 32, is a friction ring 35. It will now be understood that when the balls 14 are thrown out, the sleeve 18 will be advanced to the left and will make friction with ring 35, which will be communicated, through the ring, to the disc 32, thus producing motion of this disc, which motion will be communicated to the disc 25, thence to the shaft 28 and pinion 30. At the same time, the longitudinal movement of the shaft 28 to the left will produce a corresponding movement of the pinion 30, so that finally the pinion 30 will be brought into engagement with the gear 8. In view of the fact that the speed of the shaft 28 must be comparatively slow relative to that of the small combustion engine 9, when the pinion 30 is brought into contact with the gear 8, means are provided for gradually imparting to the shaft 28, the speed of the shaft 10, and this means is illustrated in Fig. 3. In this figure the disc 25 is shown as provided on its periphery with a series of recesses 36, having inclined lower surfaces carrying rollers 37, which rollers are free to move in the recesses 36 but restrained by the action of springs 38, connected through pins 39 to the disc 25. It will now be understood that when the disc 32 is rotated in the direction of the arrow, frictional engagement with the rollers tends to move the rollers along the inclined surfaces of the recesses 36 and thus bring about a wedging relation between the disc 32 and the disc 25. In order that this engagement shall not be too rapid or severe, the movement of the rollers 37 is resisted by the springs 38, until the speed of the discs 32 and 25 are approximately the same, and conversely, when the speed of the disc 32 decreases, the action of the springs will tend to move the rollers backward and release the engagement.

Referring now to the parts associated with the small combustion engine. It will be understood that the small combustion engine must be driven at a determined speed before the pinion 30 is thrown into engagement with the gear 8, and conversely, that this driving movement be stopped when the speed of the large combustion engine is sufficient to insure its own movement. Very many devices may be used to accomplish this result. That shown consists of a battery 45. Leading from one terminal of this battery is a conductor 46, which is wound around a core 47, and then carried by conductor 48 to and through the small combustion engine 9, to contact arm 49 (see Fig. 6) and thence, when the circuit is closed, to contact 50 connected to the other terminal of the battery 45, the circuit as thus described, when closed, forming the primary circuit of a transformer.

Surrounding the core 47 is a secondary circuit. The path of the current in the secondary circuit is from contact plate 51, through conductor 52 to the small combustion engine 9, thence through spark plugs 53 (one of which is indicated) by conductor 54 surrounding core 47 to pivot 55 of bell crank 56. The bell crank 56 is provided with two arms, 57—58. Under normal conditions (see Fig. 1) the arm 57 of the bell crank 56 closes the secondary circuit through the contact plate 51. It will be seen from the above description, that while normally the primary circuit is open, the secondary circuit is closed. The arm 58 of the bell crank 56 has formed on it two steps 59—60. Normally (see Fig. 1) the lower step 59 is located under the lower arm 61 of a trip lever 62. The arms 58 and 61 are held in engagement by means of a double spring 63. The upper arm 64 of the trip lever 62, has on its end a plate 65, which is adapted to co-operate with an inclined projection 66 carried by the contact arm 49. Pivoted to the arm 49 is a lever 67 carrying a roller 68, which is forced outward by the action of a spring 69.

Referring to Fig. 6. It will be seen that the contact arm 49 is connected to the shaft 10 of the small combustion engine 9, and consequently when the shaft rotates, the roller 68 on the end of the lever 67 will be brought in contact with the contact plate 50 once in every revolution of the shaft, and will thereby close the primary circuit of the battery 45, the secondary circuit at such time being closed, and cause a current to pass through the spark plugs of the small engine 9. Connected to one of the arms 13 is an arm 70 which arm is adapted to coact with the upper arm 57 of the bell crank 56.

The operation of the parts as above described, is as follows: Assuming the small engine 9 to be in operation the relation of the arms 70 and 57 will be as shown in Fig. 1 and will remain substantially in that position until the speed of the large combustion engine is such as to cause the balls 14 to move outward and the arm 70 to the right until it impinges upon the arm 57 of the bell crank 56, shifting the arm 57 to the right, so that it will leave 23 contact plate 51 and thus break the secondary circuit (see Fig. 2) whereupon, under the action of the spring 31, the pinion 30 will leave the gear 8 and these parts again resume the position

shown in Fig. 1. The opening of the secondary circuit, no current will pass through the spark plugs, and the small engine 9 will stop. The balls 14 and the arm 70 will return to the position shown in Fig. 1. When the arms of the bell crank are shifted, the upper arm 64 of the trip lever 62 is moved into the path of movement of arm 66 connected to contact arm 49 (see Fig. 2) which will coact with trip lever to again bring the parts into the position necessary to again transmit the movement of the small combustion engine to the large combustion engine as described (see Fig. 1).

The small combustion engine 9 may be started by any suitable device. In Fig. 7 I have disclosed a device which consists of a drum 71, over which is wound a cord 72, which passes over a pulley 73. The drum 71 is loose on shaft 10. Mounted on shaft 10 is a ratchet wheel 74, and on the interior of the drum is pivotally mounted pawl 75, the end of which takes over the ratchet wheel. When the cord is pulled, the drum is rotated in the direction of the arrow, and the motion of the drum is transmitted through the pawl and ratchet wheel to the shaft 10. When the cord is released, a coiled spring 76, connected to the frame of the engine 9 and drum 71, causes rotation of the drum in the opposite direction and winds the cord on the drum. Mounted on shaft 10 of the small combustion engine 9, is a dynamo 80 which may be employed as a generator of current to light the vehicle upon which the starting device is located.

Referring now to the modification shown in Figs. 8 and 9. The parts are all the same as described in reference to Figs. 1 and 2, with the exception that in place of the mechanical friction clutch there is shown an electric magnetic clutch. The clutch consists of a closed circuited ring 90, rigidly connected to a part corresponding to the disc 32. Located within this ring is an annular ring 91 carrying field magnets 92 adapted to be energized from a battery 93 through collector rings 94. The ring 91 and field magnets, under the action of the balls 14, are moved longitudinally relative to the ring 90. It will be observed from Fig. 8 that the field magnets are not within the ring, whereas in Fig. 9 they are within the ring. 95 is a rheostat, and 96 a starting lever.

The operation of the electromagnetic clutch is as follows: When the parts are in the position shown in Fig. 1 the magnetic relation between the closed coil 90 and the ring carrying the field magnets 92 is such that there will be no clutching action, and consequently the revolution of the shaft 10 and parts thereon will communicate no motion to the shaft 28 and pinion 30. When, however, the starting lever is moved, under the action of the balls 14, to cut resistance out of the circuit from battery 93, the magnetism of the field magnets is increased, as also the magnetic relation between the field magnets and the coil 90. Consequently, as the field magnets are moved under the action of the balls 14 to the right, and the magnetism of the field magnets increased, the magnetic relation will be increased between the field magnets and the ring 90, and the rotary speed of the ring 90 transmitted through the disc 32 to the disc 25 to shaft 28 will be gradually increased until the speed of the ring corresponds to the speed of the shaft 10 and vice versa.

The above short description of the modification is made simply for the purpose of pointing out that my invention contemplates the use of any form of clutch between the small combustion engine and the large combustion engine. I wish it understood that I do not limit myself in any wise to either form of clutch as described, as other forms may be used.

Having thus described my invention, I claim:

1. A starter for combustion engines, comprising a small combustion engine, a shaft driven thereby, a second shaft disposed in line with said first named shaft but not connected thereto, a pinion on the end of the second named shaft adapted to cooperate with a gear on a large combustion engine, means interposed between the shafts adapted to transmit the motion of the first named shaft to the second named shaft and effect progressive longitudinal movement of the second named shaft in one direction, and provided with means to cut off the power of the small engine at a predetermined speed and means acting in opposition to said last named means and adapted to move the second named shaft and pinion thereon in the opposite direction.

2. A starter for combustion engines, comprising a small combustion engine, a shaft driven thereby, a second shaft disposed in line with said first named shaft but not connected thereto, a pinion on the end of the second named shaft, a clutch situated between the shafts having one member connected to each shaft, means located on the first named shaft and regulated in its movement by the degree of rapidity of rotation of the first named shaft and adapted to establish a clutching relation between the two clutch members and effect a longitudinal movement of the second named shaft in one direction, and when the speed of rotation of the first named shaft increases, to cut off the power of the small combustion engine, and means for producing a longitudinal movement of the second named shaft in a direction opposite to its first movement

when the clutching relation between the clutch members is dis-established.

3. A starter for combustion engines, comprising a small combustion engine for imparting rotary movement to a shaft, a shaft, a second shaft in alinement with the first named shaft but not connected thereto, a pinion on the second named shaft adapted to cooperate with a gear on a main combustion engine, a clutching device interposed between the shafts, means actuated by the rotary movement of the first named shaft for throwing the clutching members into and out of relation and for producing longitudinal movement of said second named shaft in one direction, means on the first named shaft acting in opposition to the clutch controlling mechanism, means on the first named shaft acting to produce longitudinal movement of said shaft in a direction opposite to the first movement when the clutch relation is dis-established, means on said shaft for imparting primary motion to the small engine, and means also on said shaft and controlled by the rotation thereof for stopping movement of the small engine prior to the disengagement of the clutch controlling mechanism.

4. A starter for combustion engines, comprising a small combustion engine, a shaft driven thereby a second shaft in alinement therewith but not connected thereto, a pinion on the end of the second shaft adapted to coact with a gear on a large combustion engine, a clutching device located between the shafts, said clutching device comprising coordinating members and means for progressively imparting the movement of the first named shaft to the second named shaft and advancing the second named shaft in a longitudinal direction, together with means for controlling the action of the clutch at one time by the speed of the small combustion engine and for cutting off the ignition of said small engine at another time by the speed of the large combustion engine.

In testimony whereof, I affix my signature.

ARTHUR KNOX BONTA.