US00D333053S

United States Patent [19]

Hosoe

[11] Patent Number: Des. 333,053

[45] Date of Patent: ** Feb. 9, 1993

[54] TABLE

[75] Inventor: Isao Hosoe, Milan, Italy

[73] Assignee: Itoki Co., Ltd., Osaka, Japan

[**] Term: 14 Years

[21] Appl. No.: 631,794

[22] Filed: Dec. 21, 1990

[30] Foreign Application Priority Data

Aug. 29, 1990 [JP] Japan 2-28730

[52] U.S. Cl. D6/482; D6/487; D6/429

[58] Field of Search D6/428, 429, 480, 482, D6/483, 487, 489, 495, 499

[56] References Cited

U.S. PATENT DOCUMENTS

D. 132,876	6/1942	Cooper	D6/483
D. 164,295	8/1951	Gierlich	D6/429
D. 200,712	3/1965	Jakobsen	D6/487 X
D. 207,958	6/1967	Jakobsen	D6/487
D. 248,137	6/1978	Petersen	D6/489
D. 291,851	9/1987	Salvato	D6/482
D. 318,586	7/1991	Kleinschmidt	D6/482 X
3,217,672	11/1965	Haughey	D6/482 X

OTHER PUBLICATIONS

Domus-Sep. 1988, table at top left.

Primary Examiner—Nelson C. Holtje
Assistant Examiner—J. E. Seeger
Attorney, Agent, or Firm—Rogers & Killeen

[57] CLAIM

The ornamental design for a table, as shown and described.

DESCRIPTION

FIG. 1 is a perspective view of table, showing my new design;
FIG. 2 is a front elevational view;
FIG. 3 is a right side elevational view;
FIG. 4 is a left side elevational view;
FIG. 5 is a top plan view;
FIG. 6 is a bottom plan view;
FIG. 7 is a cross-sectional view, taken along line VII—VII in FIG. 3;
FIG. 8 is a right side elevational view in folded condition; and,
FIG. 9 is a left side elevational view in folded condition.

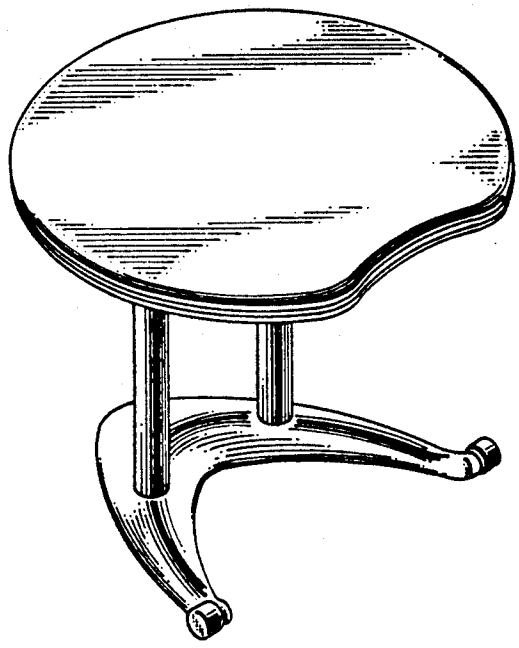

FIG.1

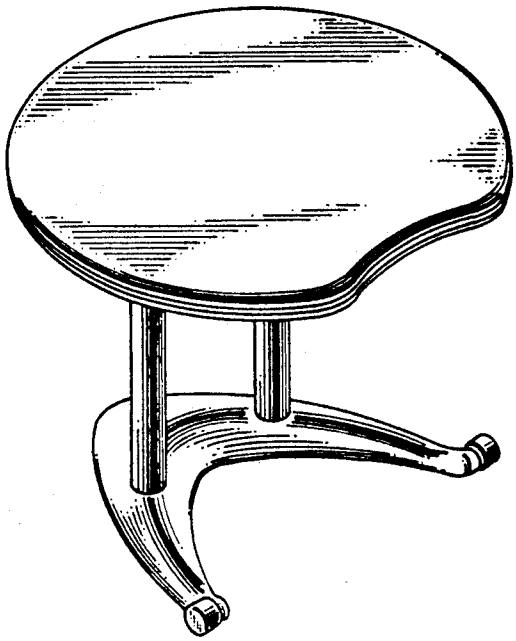

FIG.2

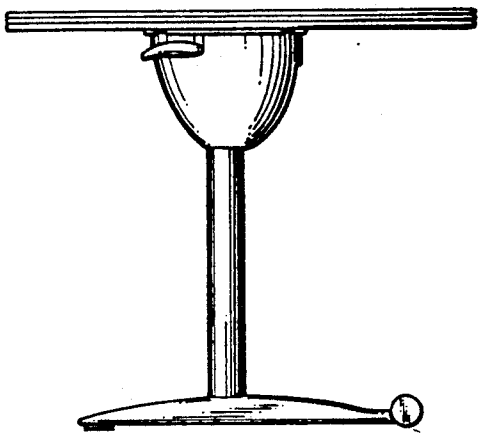

FIG.4

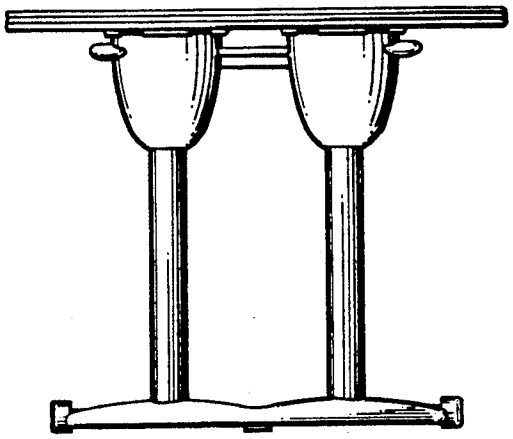

FIG.3

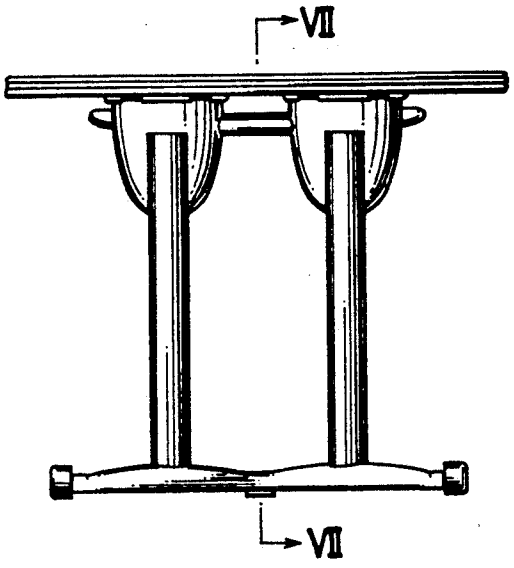

FIG.6

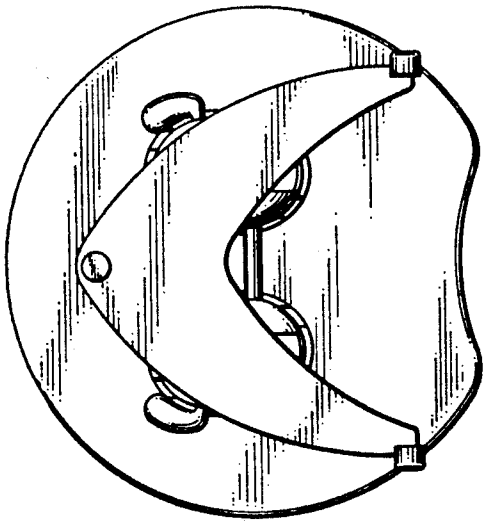

FIG.5

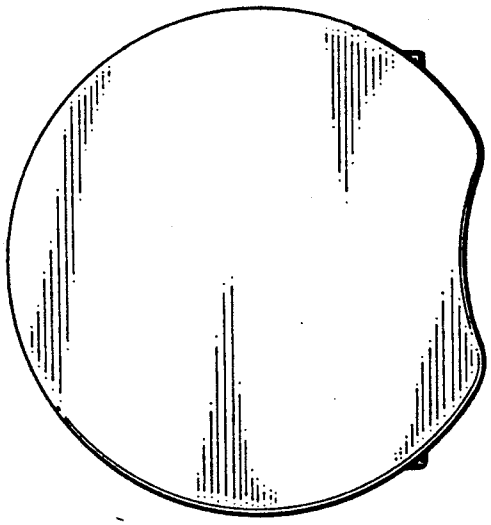

FIG. 7

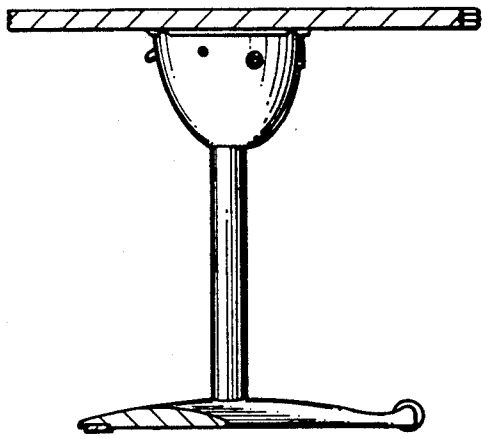

FIG. 9

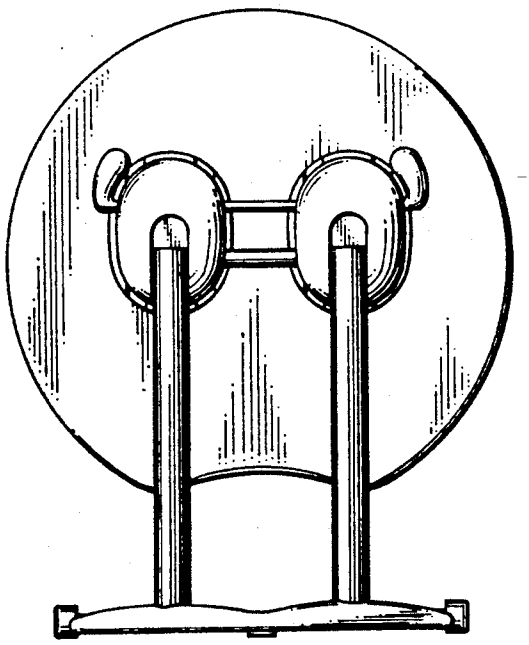

FIG. 8

