May 9, 1944. E. D. HEILMAN 2,348,622

REMOVABLE LINER FOR VISCOUS MATERIAL CONTAINERS

Filed Oct. 29, 1941 2 Sheets-Sheet 1

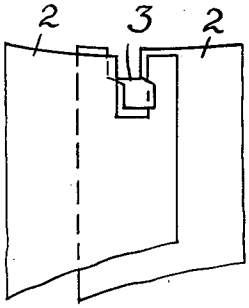

FIG.—2

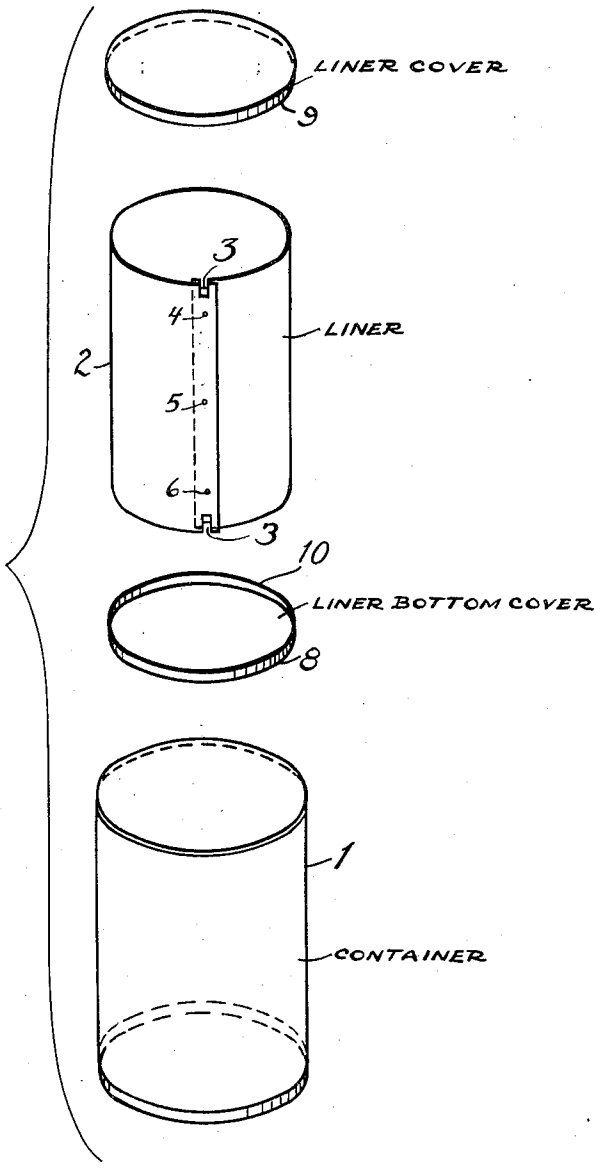

FIG.—1

Ernest D. Heilman Inventor

By P. L. Young Attorney

May 9, 1944. E. D. HEILMAN 2,348,622

REMOVABLE LINER FOR VISCOUS MATERIAL CONTAINERS

Filed Oct. 29, 1941 2 Sheets-Sheet 2

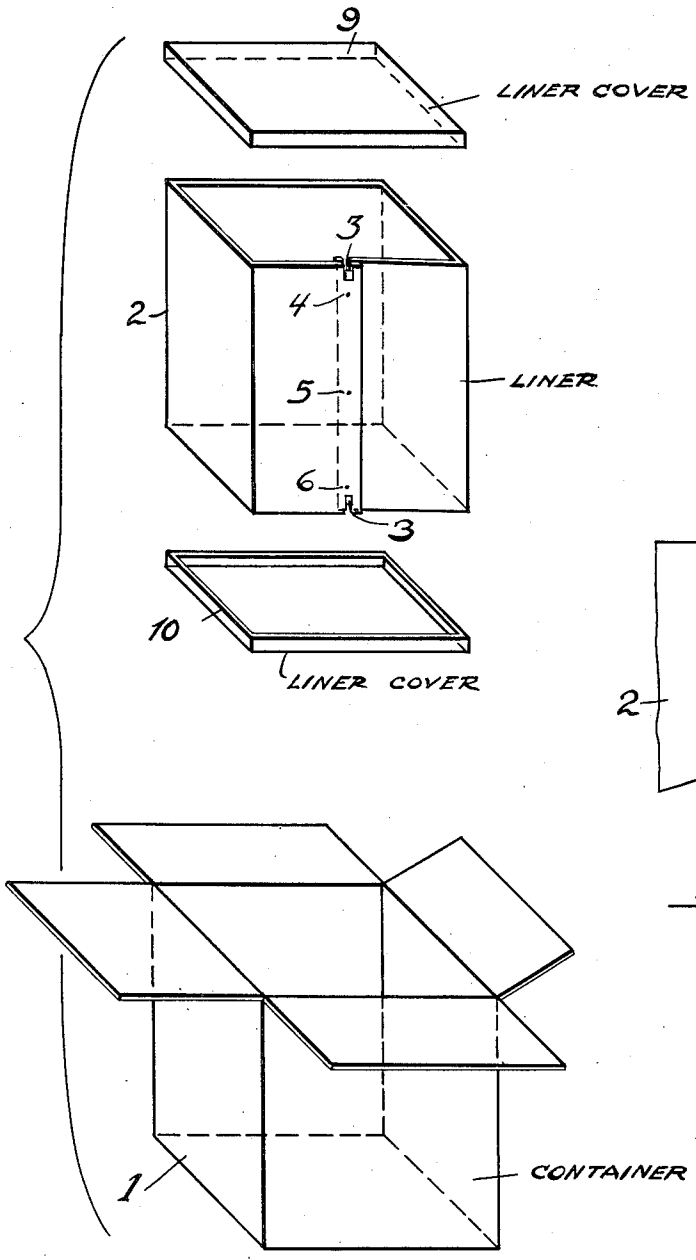

FIG.—3

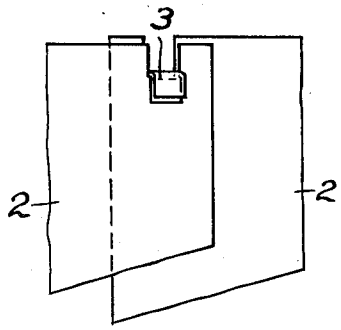

FIG.—4

Ernest D. Heilman Inventor

By P. Young Attorney

Patented May 9, 1944 2,348,622

UNITED STATES PATENT OFFICE

2,348,622

REMOVABLE LINER FOR VISCOUS MATERIAL CONTAINERS

Ernest D. Heilman, Westfield, N. J., assignor to Standard Oil Development Company, a corporation of Delaware

Application October 29, 1941, Serial No. 416,943

2 Claims. (Cl. 220—63)

This invention relates to a combination of a shipping or storage container for viscous materials that are substantially solid at ordinary temperatures.

Heretofore, metal containers such as metal drums or barrels have been used both for the storage and the shipping of viscous materials such as asphalts, pitches, tars, and polymers of isobutylene. The use of such containers ordinarily resulted in a loss of some of the material due to adherence of the material to the interior surfaces thereof. Another objection was in the difficulty of removal of the materials from the containers without the destruction of the containers. Fouling of the contents of the containers was often occasioned during the act of cutting them open, by particles of the material of which they were constructed.

This invention has for its object to provide for the packaging of materials such as high molecular weight polymers of isobutylene, asphalt, tars, pitches, and like materials, which are subject to plastic flow and tend to homogenize and solidify within a container, so that removal is readily accomplished without loss of the material.

This and other objects will be understood on reading the description with reference to the accompanying drawings.

Figure 1 is a perspective view of the various elements of a suitable container;

Figure 2 is a detailed view of the joints of the inner lining;

Figure 3 is a similar perspective view of the various elements of a container of a different shape; and

Figure 4 is a detailed view of the joints of the inner lining.

Referring to the drawings, a container with a closed bottom end which container may be of metal, wood, paper, or other suitable material, is designated by the numeral 1. A liner 2 is provided for the said container which is of split tin plate or other suitable material. The liner, when rolled or folded, is sufficiently long to have the ends overlap when inserted inside of container 1. The ends of the liner at the overlap seam are cut in a direction parallel to the long edge of the overlap to a depth of about ¼ inch at the top and bottom to form narrow tabs 3 about ¼ inch long which, on being folded over, hold the overlapping edges together. The overlap may, or may not be, spot soldered or welded at one or more points to hold the liner in a fixed form as at 4, 5 and 6. Loose fitting covers 8 and 9 are provided for each end.

One loose fitting liner cover 8 provided with an overlapping lip 10 is inserted in the container and allowed to rest on the closed bottom of container 1 with the overlapping lip 10 extending upwardly. The bottom edge of the liner 2 is slipped within upwardly extending overlapping lip 10 of the lower liner cover 8. The liner may be coated with a lubricant, such as castor oil, preferably insoluble in asphalt, tar, pitch, polymer, calcium chloride alone or with starch or clay, or the particular material to be packaged, in order to diminish the degree of adherence of the material to the liner. Thereafter, the asphalt, tar, pitch, polymer, or other viscous material, is placed within the liner and the upper loose fitting liner cover 9 provided with an overlapping lip 11 slipped on. The overlapping lip extending downwardly over the upper edge of the liner 3. The outside container is then closed and sealed.

The material in the container may readily be removed by inverting it, to allow the inner liner with the material to drop out. The top and bottom lids are removed, the tabs bent over by means such as a screwdriver and the liner peeled off the material.

I claim:

1. In combination a container with a closed end, a loose-fitting overlapping liner of sheet metal, two foldable narrow tabs at each end of the said liner on the overlap and cut parallel to the long edge of the overlap, two loose-fitting covers with collars for each end of the liner, the said collars when placed in position covering and holding the folded narrow tabs in position and means for holding the liner in its folded position at points in fixed relation to the ends of the liner.

2. In combination according to claim 1 in which the means for holding the liner in its folded position in fixed relation to the ends of the liner are spot welds.

ERNEST D. HEILMAN.