PCT WORLD INTELLECTUAL PROPERTY ORGANIZATION
International Bureau

INTERNATIONAL APPLICATION PUBLISHED UNDER THE PATENT COOPERATION TREATY (PCT)

(51) International Patent Classification 6 : A61B 3/16	A1	(11) International Publication Number: WO 99/09882
		(43) International Publication Date: 4 March 1999 (04.03.99)

(21) International Application Number: PCT/GB98/02505

(22) International Filing Date: 20 August 1998 (20.08.98)

(30) Priority Data:
9717894.1 22 August 1997 (22.08.97) GB

(71) Applicant *(for all designated States except US)*: CLEMENT CLARKE INTERNATIONAL LTD. [GB/GB]; Edinburgh Way, Harlow, Essex CM20 2TT (GB).

(72) Inventor; and
(75) Inventor/Applicant *(for US only)*: YANG, Paul, S. [CN/GB]; 133 East Park, Old Harlow, Essex CM17 0SA (GB).

(74) Agents: GURA, Alan, H. et al.; Mewburn Ellis, York House, 23 Kingsway, London WC2B 6HP (GB).

(81) Designated States: AL, AM, AT, AU, AZ, BA, BB, BG, BR, BY, CA, CH, CN, CU, CZ, DE, DK, EE, ES, FI, GB, GE, GH, GM, HR, HU, ID, IL, IS, JP, KE, KG, KP, KR, KZ, LC, LK, LR, LS, LT, LU, LV, MD, MG, MK, MN, MW, MX, NO, NZ, PL, PT, RO, RU, SD, SE, SG, SI, SK, SL, TJ, TM, TR, TT, UA, UG, US, UZ, VN, YU, ZW, ARIPO patent (GH, GM, KE, LS, MW, SD, SZ, UG, ZW), Eurasian patent (AM, AZ, BY, KG, KZ, MD, RU, TJ, TM), European patent (AT, BE, CH, CY, DE, DK, ES, FI, FR, GB, GR, IE, IT, LU, MC, NL, PT, SE), OAPI patent (BF, BJ, CF, CG, CI, CM, GA, GN, GW, ML, MR, NE, SN, TD, TG).

Published
With international search report.
Before the expiration of the time limit for amending the claims and to be republished in the event of the receipt of amendments.

(54) Title: APPLANATING TONOMETERS

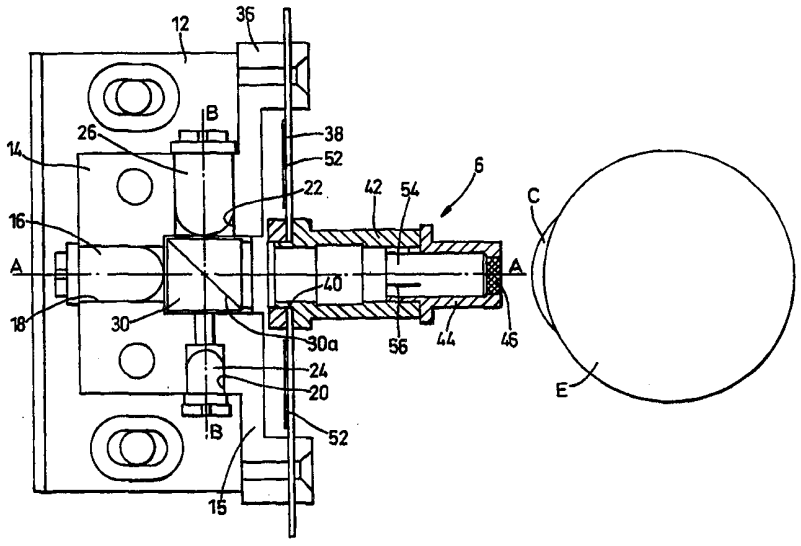

(57) Abstract

An applanating tonometer has respective means (18, 26) for transmitting a measurement beam through an applanating element (44) onto the eye of a subject and detecting the illumination reflected therefrom as a measure of the degree of applanation by a contact face (46) of the element. Applanating force and reflected illumination data are collected as the applanating force progressively builds until the contact face of the applanating element is fully applied to the eye. By interpolation of the collected data the applanating force for a predetermined smaller contact area is then derived. In this way a more accurate reading can be obtained. Means may be provided to compensate for any dynamic forces acting at the instant of applanation of the predetermined smaller area. An arrangement is also provided to monitor alignment of the tonometer with the eye, using a monitoring light source (24) from which illumination is directed along conjugate paths to form a light pattern on the retina which is dependent upon the alignment of the tonometer with the eye.

FOR THE PURPOSES OF INFORMATION ONLY

Codes used to identify States party to the PCT on the front pages of pamphlets publishing international applications under the PCT.

AL	Albania	**ES**	Spain	**LS**	Lesotho	**SI**	Slovenia
AM	Armenia	**FI**	Finland	**LT**	Lithuania	**SK**	Slovakia
AT	Austria	**FR**	France	**LU**	Luxembourg	**SN**	Senegal
AU	Australia	**GA**	Gabon	**LV**	Latvia	**SZ**	Swaziland
AZ	Azerbaijan	**GB**	United Kingdom	**MC**	Monaco	**TD**	Chad
BA	Bosnia and Herzegovina	**GE**	Georgia	**MD**	Republic of Moldova	**TG**	Togo
BB	Barbados	**GH**	Ghana	**MG**	Madagascar	**TJ**	Tajikistan
BE	Belgium	**GN**	Guinea	**MK**	The former Yugoslav Republic of Macedonia	**TM**	Turkmenistan
BF	Burkina Faso	**GR**	Greece			**TR**	Turkey
BG	Bulgaria	**HU**	Hungary	**ML**	Mali	**TT**	Trinidad and Tobago
BJ	Benin	**IE**	Ireland	**MN**	Mongolia	**UA**	Ukraine
BR	Brazil	**IL**	Israel	**MR**	Mauritania	**UG**	Uganda
BY	Belarus	**IS**	Iceland	**MW**	Malawi	**US**	United States of America
CA	Canada	**IT**	Italy	**MX**	Mexico	**UZ**	Uzbekistan
CF	Central African Republic	**JP**	Japan	**NE**	Niger	**VN**	Viet Nam
CG	Congo	**KE**	Kenya	**NL**	Netherlands	**YU**	Yugoslavia
CH	Switzerland	**KG**	Kyrgyzstan	**NO**	Norway	**ZW**	Zimbabwe
CI	Côte d'Ivoire	**KP**	Democratic People's Republic of Korea	**NZ**	New Zealand		
CM	Cameroon			**PL**	Poland		
CN	China	**KR**	Republic of Korea	**PT**	Portugal		
CU	Cuba	**KZ**	Kazakstan	**RO**	Romania		
CZ	Czech Republic	**LC**	Saint Lucia	**RU**	Russian Federation		
DE	Germany	**LI**	Liechtenstein	**SD**	Sudan		
DK	Denmark	**LK**	Sri Lanka	**SE**	Sweden		
EE	Estonia	**LR**	Liberia	**SG**	Singapore		

APPLANATING TONOMETERS

This invention relates to applanating tonometers for the measurement of intraocular pressure (IOP).

Known applanating tonometers employ a transparent applanating element with a contact face through which light can be transmitted onto, and be reflected from, the eye of a subject in a manner which varies with the degree of applanation. The aim is to determine the force required to put the contact face in contact with the cornea of the eye to applanate a given area and so provide a measure of the IOP.

One example of such a tonometer is described in GB 862920, which is a version of the instrument known as the Goldman tonometer. In order to standardise the area of applanation and avoid the need for pre-calibration, which brings its own problems as explained in that document, the eye is observed through an applanating element that comprises a split prism. When the element is applied against the eye, the area of applanation can be observed through the split prism as two semi-circular images displaced relative to each other by an amount determined by the parameters of the prism. As the force of applanation and the applanated area increases, the images increase in size and the object is to observe when the half images come together to be seen as a continuous S-shaped line, when the image diameter equals the displacement of the images. This dimension is standardised, for practical reasons, at

3.06mm.

However, the images produced do not allow a precise and unambiguous determination of the coming together of the images. A degree of subjective judgement is needed and there can therefore be significant variations in the readings taken. The readings are also dependent on the skill of the user, because it is not easy to ensure that the applanating element is always applied squarely to the cornea. Any tilt of the contact face relative to the eye will introduce measurement errors.

It would therefore be desirable to provide an instrument that could be operated with less dependence on the user's skills and judgement in order to provide a more objective reading of intraocular pressure.

According to one aspect of the present invention, there is provided a tonometer comprising an applanating element having a light-transmitting contact face engageable against the eye of a subject for projecting a light beam onto the eye and passing reflected light therefrom, means responsive to the reflected illumination and means responsive to the force of engagement of the applanating element on the eye for obtaining data of changing values of reflected illumination and force as the element is applied to the eye, said contact face having an area larger than a predetermined area of engagement at which the applanting force is to be determined, the instant of applanation of said predetermined area being obtained by interpolation from a signal obtained from the reflected illumination when

the cornea is applanated over the contact face area, in dependence upon the ratio of said predetermined and larger areas of applanation, in order to determine the force measured at said instant of applanation of the predetermined area.

Preferably, means are provided for processing progressive measurements of the force and reflected illumination to derive a measure of acceleration of the applanating element at said moment of applanation, and preferably correcting automatically the applanating force measurement accordingly, in order to compensate for dynamic force components that may appear in the measurement of the force on the applanting element. The readings obtained can thereby be rendered independent, or at least less dependent, of any variations in the rate of application of the contact face against the cornea. In this way the use of the tonometer as a hand-held instrument can be facilitated without compromising the accuracy of measurement.

In a further aspect, the invention also provides a method of measuring intraocular pressure in which a contact face of an applanating element is applied against the eye of a subject and measurements are made that are indicative of both the degree of applanation and the force applied to the applanating element, the measurements being made while increasing the pressure of application until the contact face is fully applied against the eye to produce a maximum applanation, and a pressure measurement is obtained

for a predetermined lesser extent of applanation by the element by interpolation of said measurements of force.

According to another aspect of the invention there is provided a tonometer comprising an applanating element having a contact face engageable against the eye of a subject and having means for determining the alignment of said contact face to the eye, said means comprising a light source directing a beam onto a beam-splitting element which transmits a first part of said beam onto a first reflecting element and reflects a second part of said beam onto a second reflecting element, light from said first part of the beam being arranged to be reflected by the beam-splitting element to the contact face and light from the second part of the beam being arranged to be transmitted through the beam-splitting element to the contact face, the positions of the images of said light from the first and second parts of the beam falling on the retina of the eye being thereby dependent upon the relative alignment between an optical axis of the tonometer and the optical axis of the eye.

In such a tonometer, it can be arranged that the two reflecting elements are provided by front faces of a light-emitting device for producing an applanation measurement beam and a light-receiving device for reflected illumination from the eye of said measurement beam to derive a measure of the applanation pressure.
Conveniently, the elements can provide conjugate paths for the light transmitted for the light source to their

respective reflecting surfaces. If the reflecting surfaces are located symmetrically to the optical axis of the tonometer, it can be arranged that bringing the observed images into coincidence with each other will indicate that alignment has been achieved.

One embodiment of the invention will be described by way of example with reference to the accompanying drawings, in which:

Figs. 1 and 2 are plan and front views of an applanating tonometer according to the invention with the cover of its housing removed,

Fig. 3 is a plan view of the electro-optical unit of the instrument to a larger scale,

Fig. 4 is a graph illustrating the operation of the instrument of Figs. 1-3, and

Fig. 5 is a flow diagram illustrating the sequence of operations in performing a reading.

Referring first to Figs. 1 and 2, mounted in a housing 2 of the instrument, which can be held in the hand of the operator, is an electro-optical unit 4 comprising an applanating probe 6 projecting from the front wall 8 of the housing. A circuit board 10 in the housing carries a micro-processor μP connected to electrical elements of the unit 4 for evaluating the signals they produce.

The electro-optical unit 4 comprises a base plate 12 on which are secured a U-frame 14 (Fig. 3) and a front wall 15. In the central limb of the U-frame 14 an infra red emitter 16 is held in a bore 18, aligned on a main

central optical axis A-A of the instrument. In coaxial bores 20,22 in the side limbs of the U-frame 14 and aligned on an optical axis B-B perpendicular to and intersecting the main optical axis A-A, are a green LED 24 and a photo-transistor 26. The preferred photo-transistor, Siemens SFH300FA-3, has a very narrow infra-red wavelength receiving band and a black face which comprises a daylight filter. Located between the arms of the U-frame is a beam splitter 30 having a reflection plane 30a at 45° to both optical axes A-A and B-B, and meeting both axes at their intersection. The emitter 16 and photo-transistor 26 are equidistant from that point of intersection.

Projections 36 at opposite ends of the front wall 15 support a resiliently, flexible beam 38 having central opening 40 in which the applanating probe 6 is secured. The probe 6 has a cylindrical body 42 aligned with the main optical axis A-A. The body 42 carries an applanating head 44 closed at its forward end by an optically flat window 46 providing the applanating surface to be applied to the cornea C of the eye E of a subject. The probe 6 is maintained in alignment with the optical axis A-A by a guide 48 (Fig. 1), secured to the front wall 8 of the housing, comprising a tubular portion 50 in which the cylindrical body 42 of the probe is a sliding fit. Fixed to the rear face of the beam 38 to each side of the probe are strain gauges 52 which respond to the beam deflection produced when the probe 6 slides in its guide 48.

For reasons of hygiene, the applanating head 44

is readily replaceable. It comprises a skirt 54 with three symmetrically spaced slits 56 to provide a degree of resilience so that it can be gripped frictionally by the body 42 and slid out when it is to be replaced.

In use, light from the infra red emitter 16 passing along the main optical axis A-A through the beam splitter 30 is directed through the window 46 onto the cornea C of the subject. Part of the light reflected back from the cornea through the window 46 is reflected by the beam splitter 30 onto the photo-transistor 26 to generate a signal that is dependent upon the intensity of the reflected light. No reflection will occur where the window is in contact with the cornea, so the photo-transistor signal is dependent upon the degree of applanation of the cornea by the window. Green light from the LED 24 is also transmitted through the beam splitter 30 to the photo-transistor 26 but the light is outside the receiving band of that element so that its output is not affected. The LED output serves solely to assist alignment of the instrument, as will be described further below.

When the applanating probe 6 is forced into contact with the cornea, the flexible beam 38 will be deflected. The strain gauges 52 mounted on the beam are connected into a bridge circuit (not shown) on the circuit board 10 to measure the deflection in order to obtain an indication of the force applied to the beam. At the initial stage of contact, when the force is small, there will only be a small interface formed between the window 46

and the cornea C. As the force and the area of contact increase, so the amount of reflected light falls. While the instrument is applied to the eye the signals from the photo-transistor 26 and the strain gauges 52 are inputted to a memory store 62 (Fig. 1) connected to the micro-processor μP so that data can be held of the increasing applanating force and the reducing amount of reflected light related to a common time base.

The graph of Fig. 4 shows, against the time base, traces a and b respectively of the optical signal and force data as the probe is applied to the eye and then withdrawn again. For convenience the optical trace a is shown inverted and it indicates how, as the probe is applied with increasing force, from an initial value S, the light reflected from the cornea drops with increasing area of contact, and then increases again when the force is removed. Once the entire area of the window is covered the reflection signal remains constant at a plateau value P, even though Fig 4 shows the force trace b continuing to increase as the probe may be pressed further against the eye to ensure full contact has been made. Similarly, as the probe is withdrawn, only after the deflection force has decreased sufficiently for the window to begin to be uncovered, does the optical reflection signal change.

As described earlier, in conventional applanating tonometers, such as the Goldman tonometer, the aim is to measure the force at which the cornea is flattened over a predetermined area of 3.06mm. The diameter of the probe

window in the present instrument is made slightly larger at 3.3mm, although the instrument is intended to provide a force reading for the standard 3.06mm diameter value, for a reason that will now be explained.

Referring to the graph of Fig. 4. As can be seen from the optical trace, the signal changes rapidly as the applanating pressure of the probe is increased, but this change slows progressively in a transition region immediately before the window 46 completely covers the cornea and a plateau value is reached. It is not possible, therefore, to identify precisely the point at which the plateau value is first reached. Furthermore, in these conditions any noise in the signal represents a source of further uncertainty.

However, it will be seen that the plateau value itself is very clearly indicated and it is known that this corresponds to a state of full contact between the window 46 and the cornea C. By taking the ratio of the squares of the actual and standard window diameters, in this example giving the value 0.86, it is therefore possible to identify relatively accurately a point on the optical trace where the change of reflectivity has reached 0.86 of the change to the plateau value. This represents the point at which there is contact with an area of 3.06mm diameter and the force value at the same time instant therefore indicates the strain gauge response when the standard area of applanation has been achieved by the probe window.

It may be noted that this procedure gives a

reading which is not dependent upon the absolute values of the initial optical signal before contact with the cornea nor the plateau signal. Therefore, although the reflectivity of the eyes of different subjects can vary the derivation of the required signal value will not be affected as this is simply an objective measure of the overall change of signal in the ratio of the actual window size to the chosen standard window size.

A program store 64 (Fig. 1) in conjunction with the microprocessor μP executes the measurement program described. Fig. 1 also shows a power supply 66 for the electrical circuitry and read-out device 68 for the values obtained.

The manner in which the data of the traces is evaluated in the micro-processor, will be described with reference to Fig. 5. The stored data is first smoothed and the start point I(Fig 4) of the optical trace, at which the applanating element makes initial contact with the subject's eye is determined. The corresponding optical signal value S is extracted and also the plateau value P of the optical trace at an instant II some time after the transition (indicated at III) to the steady state optical signal. The difference between the optical signals at I and II is then evaluated and provides a measure of the total change of optical signal during the applanation of the cornea to the full 3.3mm diameter of the window, ie the dimension H. Taking then a rise of optical signal of 0.86H from the value at the start point I, a reference point is

obtained on the optical trace which identifies the time instant IV, corresponding to the instant of contact with a standard 3.06mm diameter window area. The value of the force trace at time instant IV therefore indicates the force measured by the strain gauges when the applanation has reached the standard 3.06mm diameter area, and that value can be displayed on the read-out device 68.

Fig 5 illustrates some further processing of the force value obtained to increase the accuracy of measurement. Because the probe is still moving forwards at the time instant IV, the strain gauge signal can also include a dynamic component from any acceleration or deceleration of the probe. It is therefore desirable to adjust the signal value to compensate for this effect. The time taken for the movement from initial contact to applanation of the standard 3.06mm diameter is given by the interval between the points I and IV on the optical trace. the distance moved can be calculated with sufficient accuracy by assuming a spherical radius of 7.9mm for the cornea, to give a value of 0.15mm. From the optical trace it is then possible to determine what, if any, acceleration or deceleration is occurring at the time instant IV. The mass acted upon is sufficiently closely represented by the mass of the slidable probe, so on the basis of this data the micro-processor is able to calculate the acceleration force and compensate the strain gauge signal accordingly to adjust the value displayed on the read-out device.

When measuring the IOP of a subject, the value

obtained will vary, for example due to variations in instantaneous blood pressure. It is desirable, therefore, to cross-reference a series of readings in order to obtain a final read-out that is at least partially compensated for such effects. The preferred method of cross-referencing uses five successive readings, but those giving the highest and lowest IOP values are discarded. From the remaining three readings the change of optical signal, ie. the values H, are averaged. Larger H values are found to give larger force measurements and the force values are adjusted to accord with the mean H value before they are averaged for the read-out of IOP on the read-out device 68.

The instrument described can be arranged as a bench-mounted instrument with a mechanical drive for advancing the probe to give a uniform operating sequence, in which case any correction applied for acceleration force can be a constant value.

If the apparatus is in the form of a hand-held instrument, the operating program is preferably adapted to detect abnormal modes of operation that may then occur. In particular, the operator may stop moving the probe forwards too soon to establish a true plateau value or the contact with the eye may not be maintained for a long enough period. If either fault is detected, the micro-processor can be programmed to abort the following sequence of operations and display an invalid reading message.

A possible source of error arises in the use of an applanating tonometer if the contact face of the probe

is tilted in relation to the eye. The green light emitted from LED 24 is used to assist alignment of the instrument with the eye and so avoid any such error. Some of the light emission from the LED passes through the reflection plane 30a of the beam splitter to impinge on the photo-transistor 26 which is a conventional device with a generally hemispherical reflective front face, so that some light is returned to the beam splitter where a part is reflected at the plane 30a to pass through the probe 6 onto the eye. Another part of the incident light from the LED 24 is reflected by the beam splitter 30 onto the infra red emitter 18 which similarly has a generally hemispherical reflective front face. Part of the light reflected from the emitter front face will thus be transmitted to the eye through the reflection plane of the beam splitter and the probe 6.

The eye of the subject therefore receives green light reflected on conjugate paths from both the infra red emitter and, to a lesser extent because of its black surface, the photo-transistor. In each case, the image projected by the curved reflecting faces has a central brighter zone merging into a dimmer halo. If the axis of the eye and the axis of the probe are in alignment, the images are superimposed directly onto each other and a central circular bright spot will be seen by the subject.

If the axes are tilted or offset relative to each other, there will be a change in the images seen because the reflected light distribution reaching the eye of the

subject is no longer symmetrical about a central axis. The subject will therefore be able to indicate that the probe is correctly aligned both before and during operation of the instrument by observing when a symmetrical brighter zone lies in the centre of the surrounding halo.

It will be understood that this method of monitoring alignment can be used independently of whether the method of measuring IOP described above is used or not.

It will also be understood that the apparatus described can be modified in many ways within the scope of the invention. For example, although the frame 14 holding the optical elements 16,24,26,30 is shown secured rigidly to the base plate 12, it may be preferred to secure these elements to the probe body 42, directly or indirectly, so that they are fixed in relation to the optical element of the applanating head 44.

CLAIMS

1. A tonometer comprising an applanating element having a light-transmitting contact face engageable against the eye of a subject for projecting a light beam onto the eye and passing reflected light therefrom, means responsive to the reflected illumination and means responsive to the force of engagement of the applanating element on the eye for obtaining data of changing values of reflected illumination and force as the element is applied to the eye, said contact face having an area larger than a predetermined area of engagement at which the applanating force is to be determined, the instant of applanation of said predetermined area being obtained by interpolation from a signal obtained from the reflected illumination when the cornea is applanated over the contact face area, in dependence upon the ratio of said predetermined and larger areas of applanation, in order to determine the force measured at said instant of applanation of the predetermined area.

2. A tonometer according to claim 1 comprising means for applying a correction to said determined force for a dynamic force component acting between the applanating element and the eye at said instant of applanation.

3. A tonometer according to claim 2 wherein means are provided for processing progressive measurements of

the force and reflected illumination to derive a measure of the dynamic force component at said instant of applanation.

4. A tonometer according to any one of claims 1 to 3 wherein the applanating element is guided for rectilinear displacement on a resilient mounting and the applanating force is derived from a measurement of the deflection of the mounting when said element is applied against the eye.

5. A tonometer according to claim 4 wherein a beam splitting element is located in a path of light beam transmission from an illumination device to the eye, the reflected light beam returned from the eye through the beam splitting element being directed onto a detecting device forming the means responsive to the reflected illumination, the beam associated with one said device passing directly through the beam splitter and the beam associated with the other said device being reflected by the beam splitter.

6. A tonometer according to claim 5 wherein the illumination device is arranged to transmit the incident light beam along an axis extending in the direction of displacement of the applanating element.

7. A tonometer according to claim 5 or claim 6

comprising a monitoring light source arranged to direct light through the beam splitter onto respective front faces of the illumination and detection devices for reflection therefrom onto the eye of the subject, whereby the pattern of reflected light from said source observed by the subject will vary in dependence upon the alignment of the axis of the eye of the subject with the axis of the applanating element.

8. A tonometer according to claim 7 wherein said reflecting front faces of the illumination and detection devices are each rotationally symmetrical about an optical axis of the respective device, whereby misalignment of said axes is observable as a loss of symmetry in the pattern of reflected illumination.

9. A method of measuring intraocular pressure in which a contact face of an applanating element is applied against the eye of a subject and measurements are made that are indicative of both the degree of applanation and the force applied to the applanating element, the measurements being made while increasing the pressure of applanation until the contact face is fully applied against the eye to produce a maximum applanation, and a pressure measurement is obtained for a predetermined lesser extent of applanation by the element by interpolation of said force measurements.

10. A method according to claim 9 wherein said pressure measurement is corrected for any dynamic force component being applied by the applanating element to the eye during measurement at the instant of said lesser extent of applanation.

11. A method according to claim 8 or claim 9 wherein the alignment of the optical axis of the eye of the subject with a central axis of the applanating element is monitored by directing light from a monitoring light source in the tonometer onto respective mutually perpendicular reflecting surfaces to follow conjugate paths to said central axis, so that the pattern of the monitoring illumination observed by the subject varies depending upon whether there is misalignment of said axes.

12. A tonometer comprising an applanating element having a contact face engageable against the eye of a subject and having means for determining the alignment of an optical axis of the tonometer to the eye, said means comprising a light source directing a beam onto a beam-splitting element which transmits a first part of said beam onto a first reflecting element and reflects a second part of said beam onto a second reflecting element, light from said first part of the beam being arranged to be reflected by the beam-splitting element along said optical axis to the contact face and light

from the second part of the beam being arranged to be transmitted through the beam-splitting element along said optical axis to the contact face, the positions of the images of said light from the first and second parts of the beam falling on the retina of the eye being thereby dependent upon the relative alignment between the optical axis of the tonometer and the optical axis of the eye.

13. A tonometer according to claim 12 wherein the two reflecting elements are provided by front faces of a light-emitting device for producing an applanation measurement beam and a light-receiving device for illumination of said measurement beam reflected from the eye to derive a measure of the applanating pressure.

14. A tonometer according to claim 13 wherein the reflecting elements provide conjugate paths for the light transmitted for the light source to their respective reflecting surfaces.

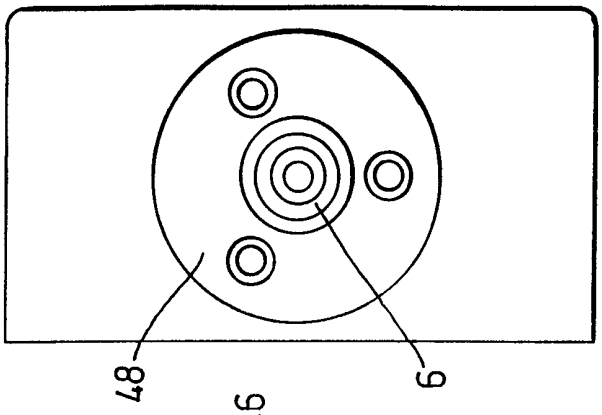

Fig. 2

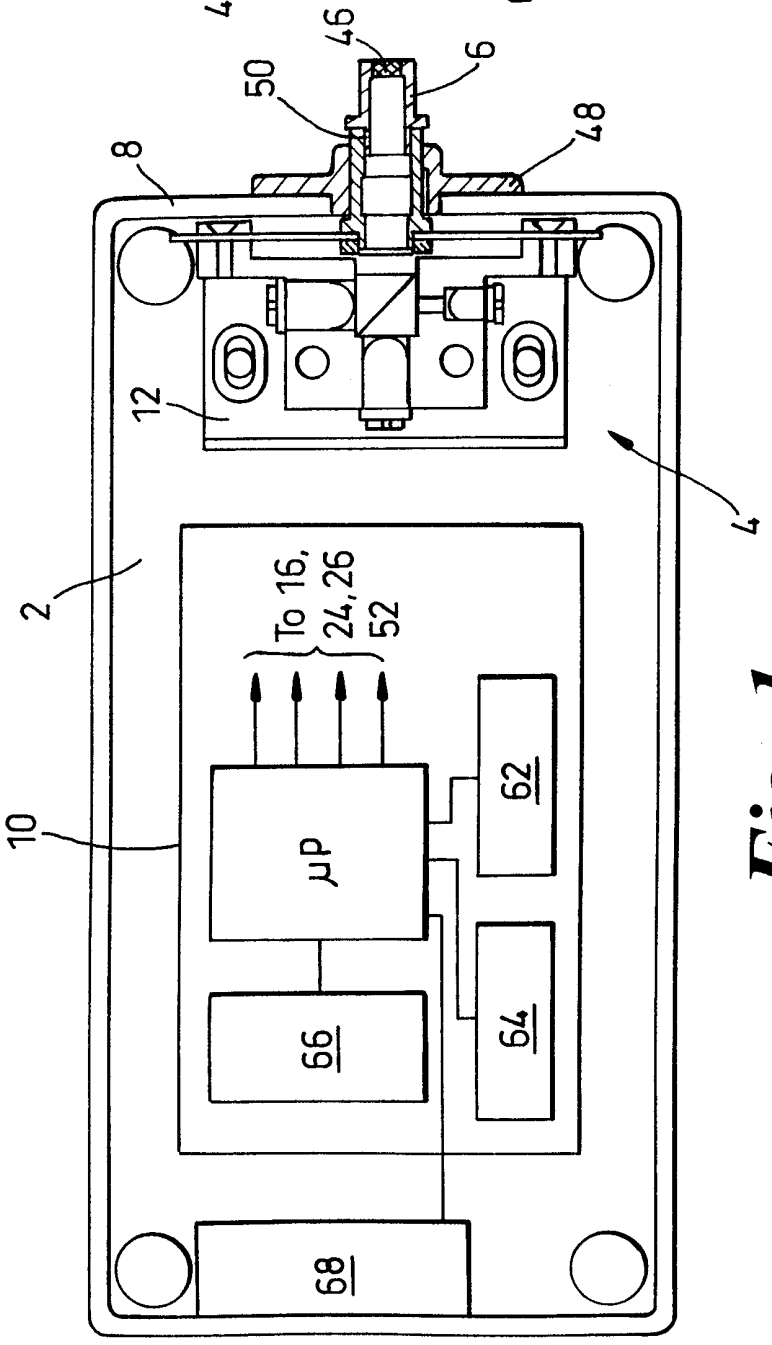

Fig. 1

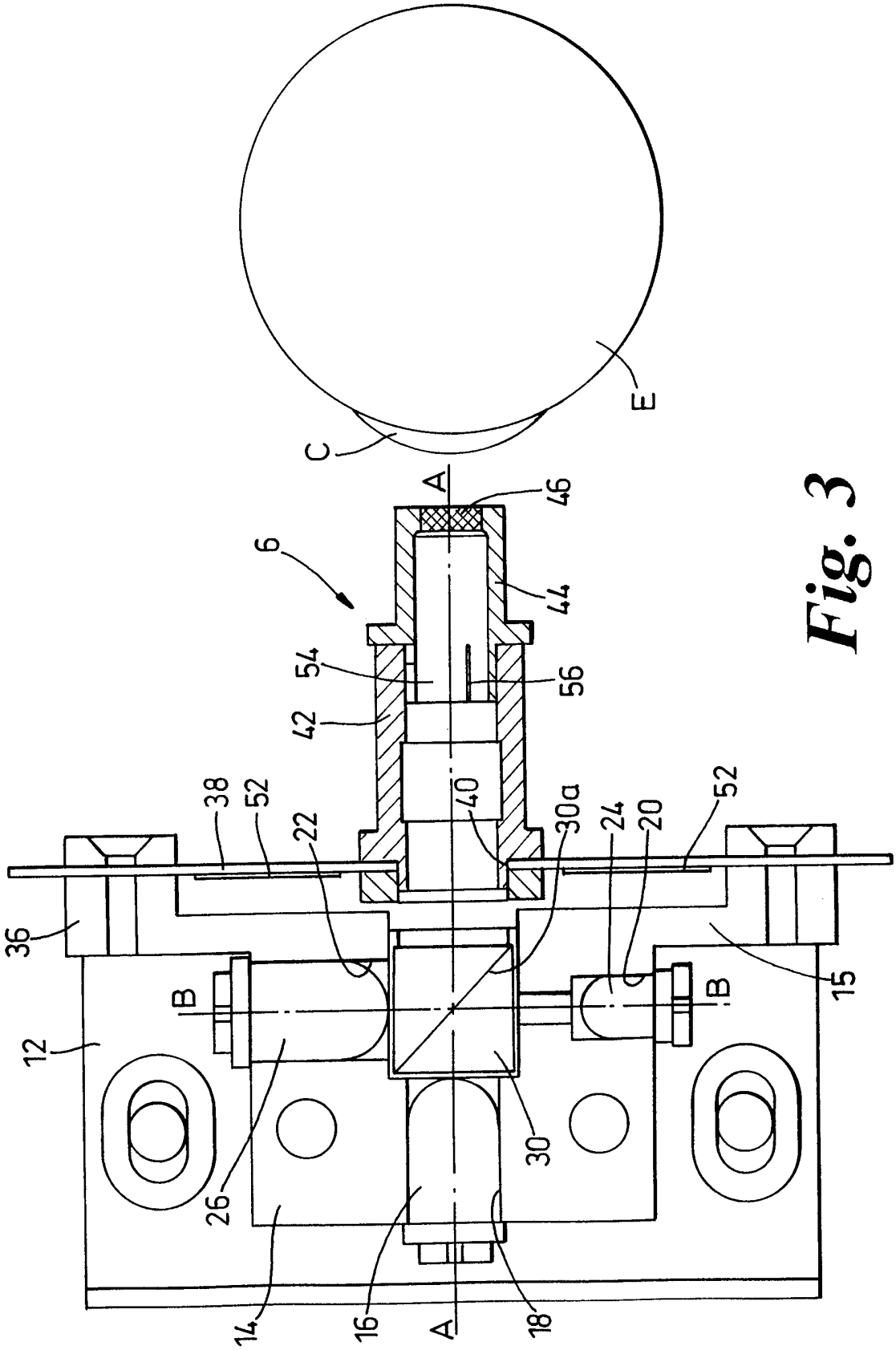
C
E
A
46
6
44
54
56
42
38
52
22
40
30a
24
20
52
36
15
B
B
12
26
30
14
16
A
18

Fig. 3

3/4

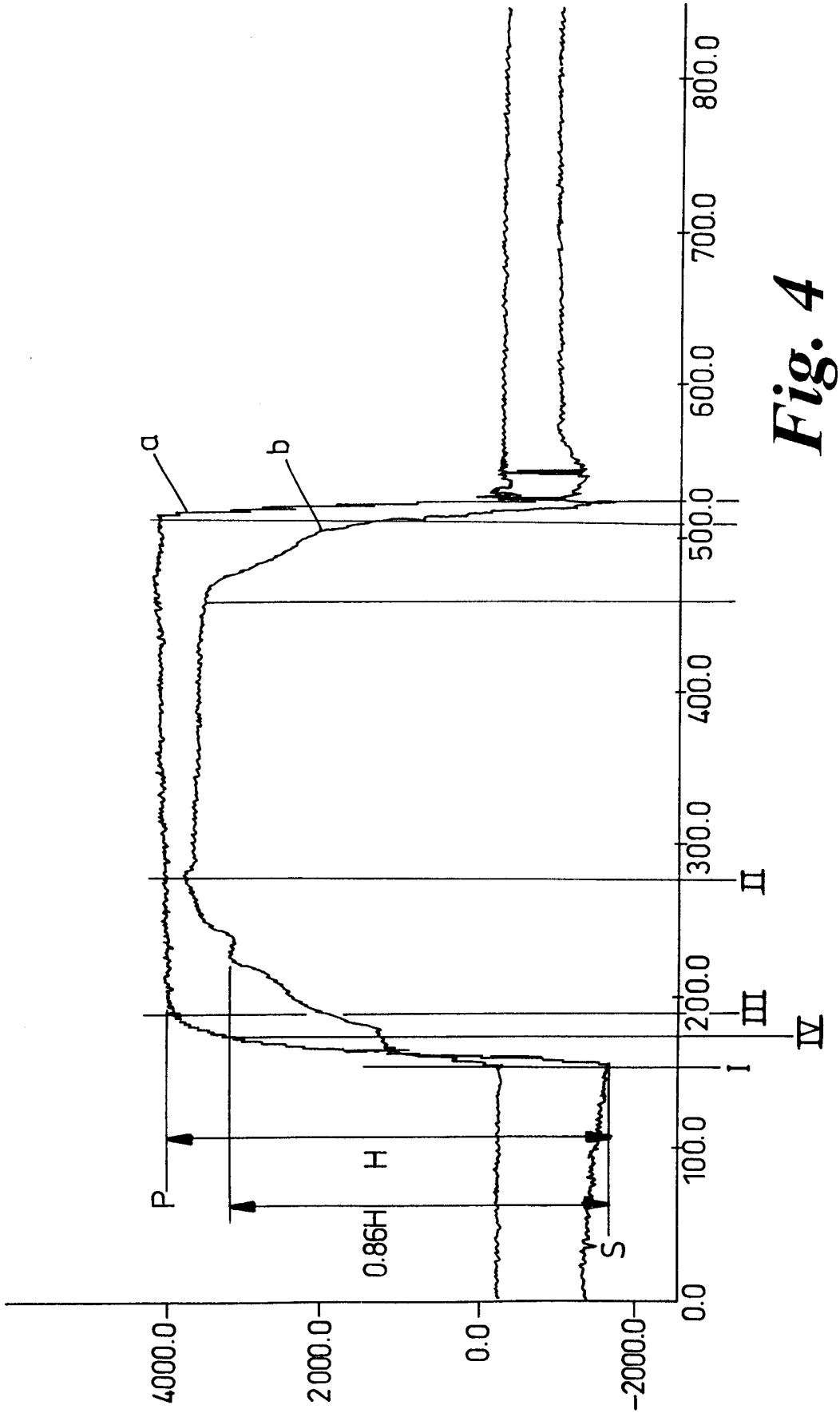
4000.0
2000.0
0.0
-2000.0
0.0
100.0
200.0
300.0
400.0
500.0
600.0
700.0
800.0
a
b
P
H
0.86H
S
I
II
III
IV

Fig. 4

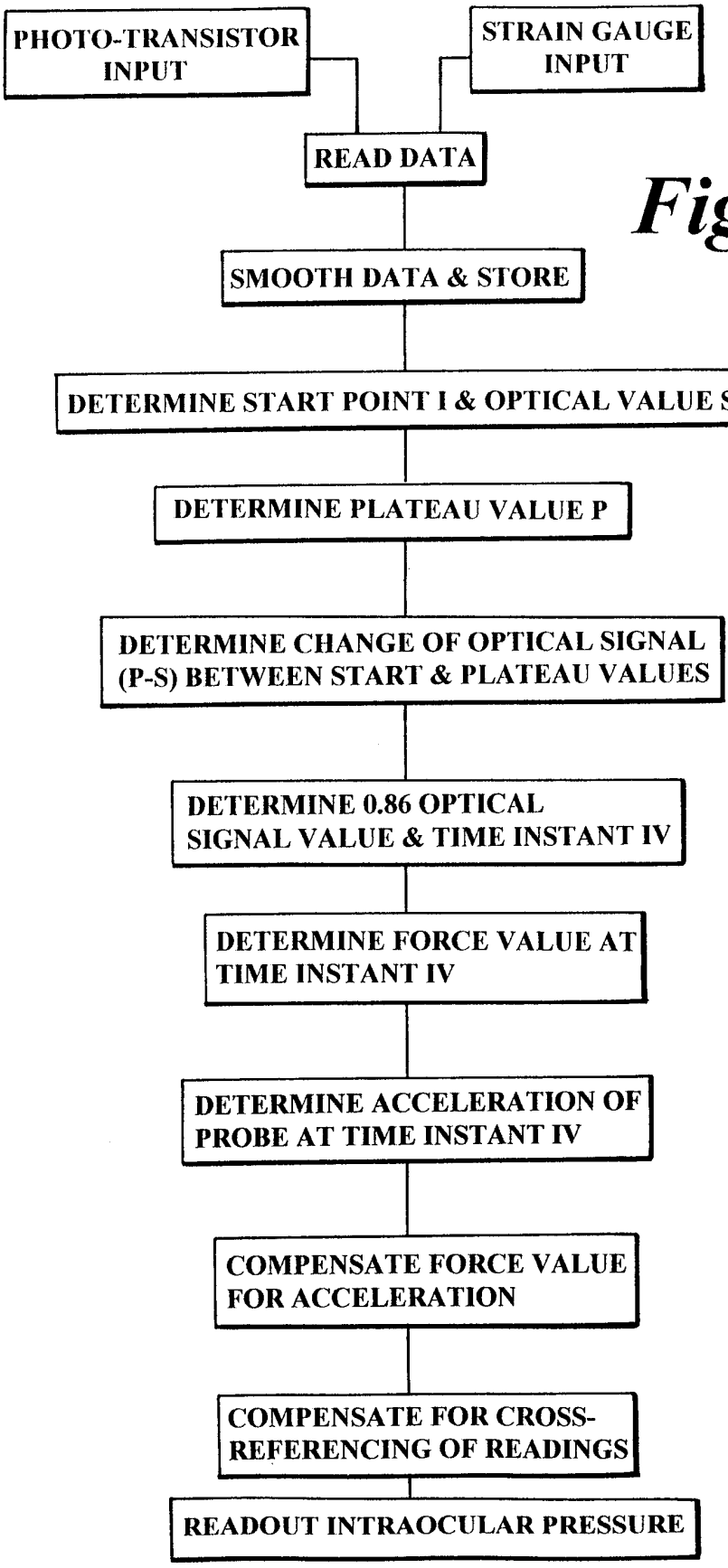
PHOTO-TRANSISTOR INPUT
STRAIN GAUGE INPUT
READ DATA
SMOOTH DATA & STORE
DETERMINE START POINT I & OPTICAL VALUE S
DETERMINE PLATEAU VALUE P
DETERMINE CHANGE OF OPTICAL SIGNAL (P-S) BETWEEN START & PLATEAU VALUES
DETERMINE 0.86 OPTICAL SIGNAL VALUE & TIME INSTANT IV
DETERMINE FORCE VALUE AT TIME INSTANT IV
DETERMINE ACCELERATION OF PROBE AT TIME INSTANT IV
COMPENSATE FORCE VALUE FOR ACCELERATION
COMPENSATE FOR CROSS-REFERENCING OF READINGS
READOUT INTRAOCULAR PRESSURE

Fig. 5

INTERNATIONAL SEARCH REPORT

Internatic Application No
PCT/GB 98/02505

A. CLASSIFICATION OF SUBJECT MATTER
IPC 6 A61B3/16

According to International Patent Classification (IPC) or to both national classification and IPC

B. FIELDS SEARCHED

Minimum documentation searched (classification system followed by classification symbols)
IPC 6 A61B

Documentation searched other than minimum documentation to the extent that such documents are included in the fields searched

Electronic data base consulted during the international search (name of data base and, where practical, search terms used)

C. DOCUMENTS CONSIDERED TO BE RELEVANT

Category °	Citation of document, with indication, where appropriate, of the relevant passages	Relevant to claim No.
A	EP 0 418 746 A (DATRON ELECTRONIC GMBH) 27 March 1991 see page 4, line 5 - page 7, line 23 see page 10, line 32 - page 11, line 10 ---	1,3,4,7, 12
A	US 5 070 875 A (FALCK FRANCIS Y ET AL) 10 December 1991 see column 8, line 7 - column 9, line 36; claims ---	1
A	DE 44 44 459 C (JENOPTIK TECHNOLOGIE GMBH) 29 February 1996 see column 4, line 14 - column 5, line 18; claims; figure 3 ---	1,4

-/--

[X] Further documents are listed in the continuation of box C.

[X] Patent family members are listed in annex.

° Special categories of cited documents :

"A" document defining the general state of the art which is not considered to be of particular relevance

"E" earlier document but published on or after the international filing date

"L" document which may throw doubts on priority claim(s) or which is cited to establish the publication date of another citation or other special reason (as specified)

"O" document referring to an oral disclosure, use, exhibition or other means

"P" document published prior to the international filing date but later than the priority date claimed

"T" later document published after the international filing date or priority date and not in conflict with the application but cited to understand the principle or theory underlying the invention

"X" document of particular relevance; the claimed invention cannot be considered novel or cannot be considered to involve an inventive step when the document is taken alone

"Y" document of particular relevance; the claimed invention cannot be considered to involve an inventive step when the document is combined with one or more other such documents, such combination being obvious to a person skilled in the art.

"&" document member of the same patent family

Date of the actual completion of the international search	Date of mailing of the international search report
5 January 1999	11.01.99

Name and mailing address of the ISA	Authorized officer
European Patent Office, P.B. 5818 Patentlaan 2 NL - 2280 HV Rijswijk Tel. (+31-70) 340-2040, Tx. 31 651 epo nl, Fax: (+31-70) 340-3016	Manschot, J

4

Form PCT/ISA/210 (second sheet) (July 1992)

INTERNATIONAL SEARCH REPORT

Internatio Application No
PCT/GB 98/02505

C.(Continuation) DOCUMENTS CONSIDERED TO BE RELEVANT

Category °	Citation of document, with indication, where appropriate, of the relevant passages	Relevant to claim No.
A	US 5 355 884 A (BENNETT EMERIC S) 18 October 1994 see column 4, line 4 - line 34 see column 5, line 44 - column 6, line 5; figures	1,5
A	DE 34 21 701 A (JENOPTIK JENA GMBH) 13 December 1984 see page 33, paragraph 3; figure 4	1,5
A	EP 0 536 574 A (MASSIE RESEARCH LAB INC) 14 April 1993 see column 7, line 31 - line 56 see column 14, line 29 - column 15, line 22; figures	12
A	US 4 995 393 A (KATSURAGI KENJIRO ET AL) 26 February 1991 see the whole document	12

4

INTERNATIONAL SEARCH REPORT

Inter nal application No.
PCT/GB 98/ 02505

Box I Observations where certain claims were found unsearchable (Continuation of item 1 of first sheet)

This International Search Report has not been established in respect of certain claims under Article 17(2)(a) for the following reasons:

1. [X] Claims Nos.: 9-11
because they relate to subject matter not required to be searched by this Authority, namely:
see FURTHER INFORMATION sheet PCT/ISA/210

2. [ ] Claims Nos.:
because they relate to parts of the International Application that do not comply with the prescribed requirements to such an extent that no meaningful International Search can be carried out, specifically:

3. [ ] Claims Nos.:
because they are dependent claims and are not drafted in accordance with the second and third sentences of Rule 6.4(a).

Box II Observations where unity of invention is lacking (Continuation of item 2 of first sheet)

This International Searching Authority found multiple inventions in this international application, as follows:

see additional sheet

1. [X] As all required additional search fees were timely paid by the applicant, this International Search Report covers all searchable claims.

2. [ ] As all searchable claims could be searched without effort justifying an additional fee, this Authority did not invite payment of any additional fee.

3. [ ] As only some of the required additional search fees were timely paid by the applicant, this International Search Report covers only those claims for which fees were paid, specifically claims Nos.:

4. [ ] No required additional search fees were timely paid by the applicant. Consequently, this International Search Report is restricted to the invention first mentioned in the claims; it is covered by claims Nos.:

Remark on Protest

[X] The additional search fees were accompanied by the applicant's protest.

[ ] No protest accompanied the payment of additional search fees.

FURTHER INFORMATION CONTINUED FROM PCT/ISA/ 210

This International Searching Authority found multiple (groups of) inventions in this international application, as follows:

1. Claims: 1-11

   Applanation tonometer with means for determining the force at applanation of a predetermined area.

2. Claims: 12-14

   Applanation tonometer with means for detecting alignment of the optical axis of the tonometer to the eye.

FURTHER INFORMATION CONTINUED FROM PCT/ISA/ 210

Claims Nos.: 9-11

Rule 39.1(iv) PCT - Method for treatment of the human or animal body by surgery. In particular, the method involves applanation of the eye, which is a physical intervention performed directly on the living human body, mostly under the supervision of a medical doctor. Such an intervention is of surgical nature.

INTERNATIONAL SEARCH REPORT

Information on patent family members

Internati · Application No
PCT/GB 98/02505

Patent document cited in search report	Publication date	Patent family member(s)	Publication date
EP 0418746 A	27-03-1991	DE 3931630 A	08-05-1991
		US 5190042 A	02-03-1993
US 5070875 A	10-12-1991	DE 69121211 D	05-09-1996
		DE 69121211 T	23-01-1997
		EP 0558665 A	08-09-1993
		WO 9208404 A	29-05-1992
DE 4444459 C	29-02-1996	NONE	
US 5355884 A	18-10-1994	NONE	
DE 3421701 A	13-12-1984	DD 218833 A	20-02-1985
		DD 219109 A	27-02-1985
		DD 235415 A	07-05-1986
		DD 222203 A	15-05-1985
EP 0536574 A	14-04-1993	DE 69215479 D	09-01-1997
		DE 69215479 T	12-06-1997
		JP 5253190 A	05-10-1993
		US 5396888 A	14-03-1995
		US 5636635 A	10-06-1997
US 4995393 A	26-02-1991	JP 1256923 A	13-10-1989