Oct. 24, 1944. L. C. ROTTER ET AL 2,361,125

PUMP

Filed Sept. 20, 1943 3 Sheets-Sheet 1

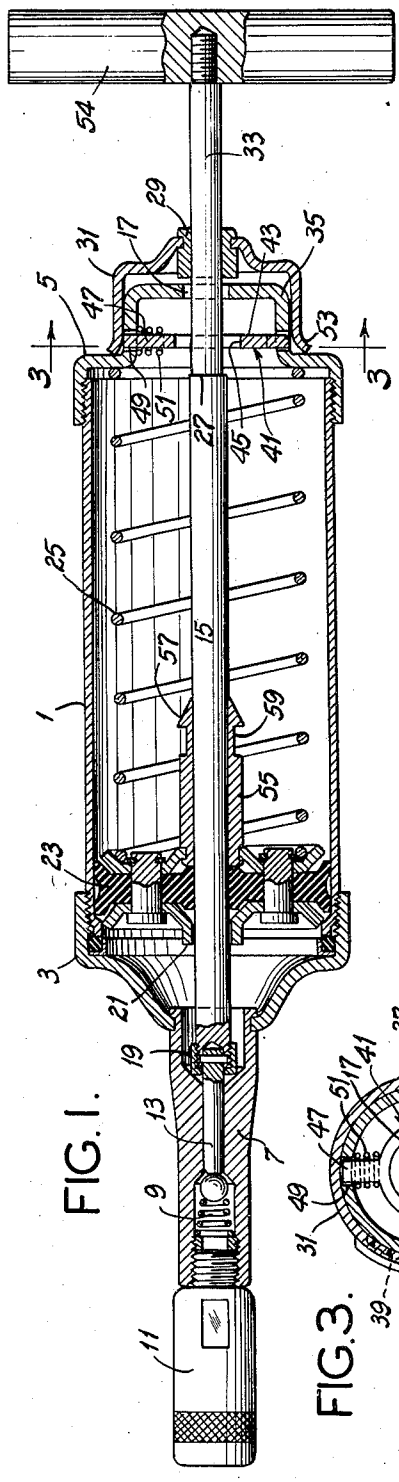

FIG. 1.

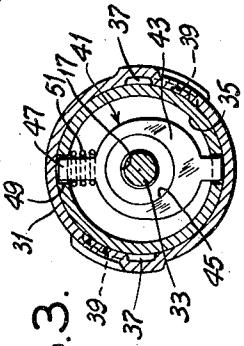

FIG. 3.

FIG. 6.

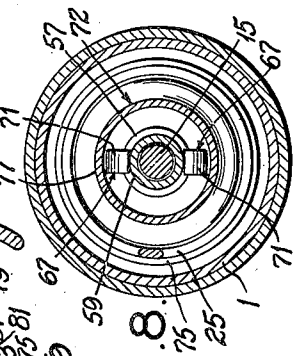

FIG. 8.

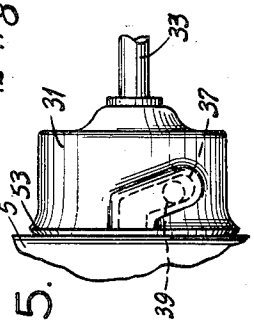

FIG. 5.

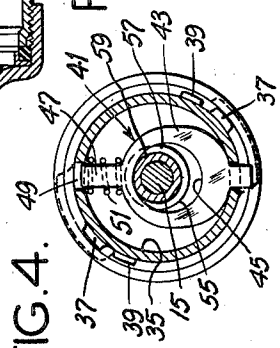

FIG. 4.

Lutwin C. Rotter,
Victor G. Klein,
Rudy F. Schneller,
Inventors
Haynes and Koenig,
Attorneys.

Oct. 24, 1944. L. C. ROTTER ET AL 2,361,125

PUMP

Filed Sept. 20, 1943 3 Sheets-Sheet 2

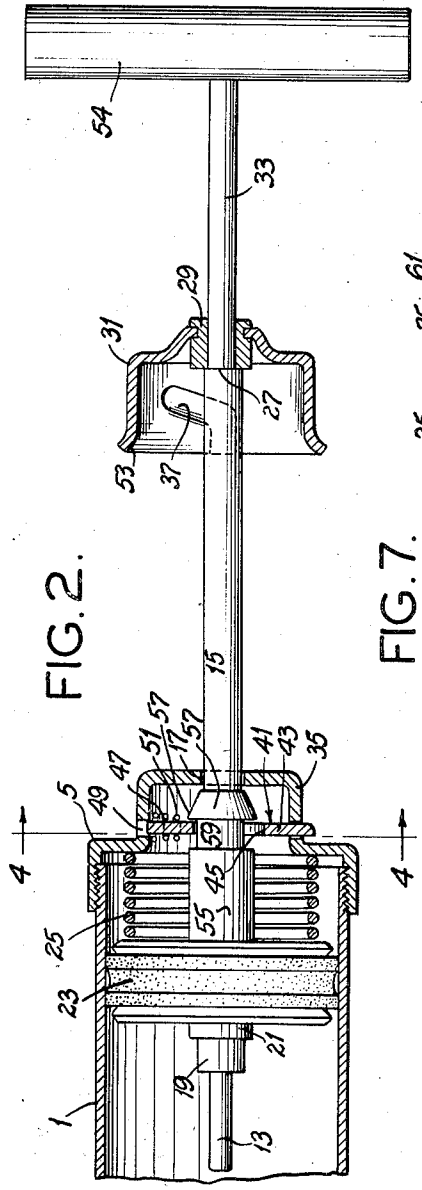

FIG. 2.

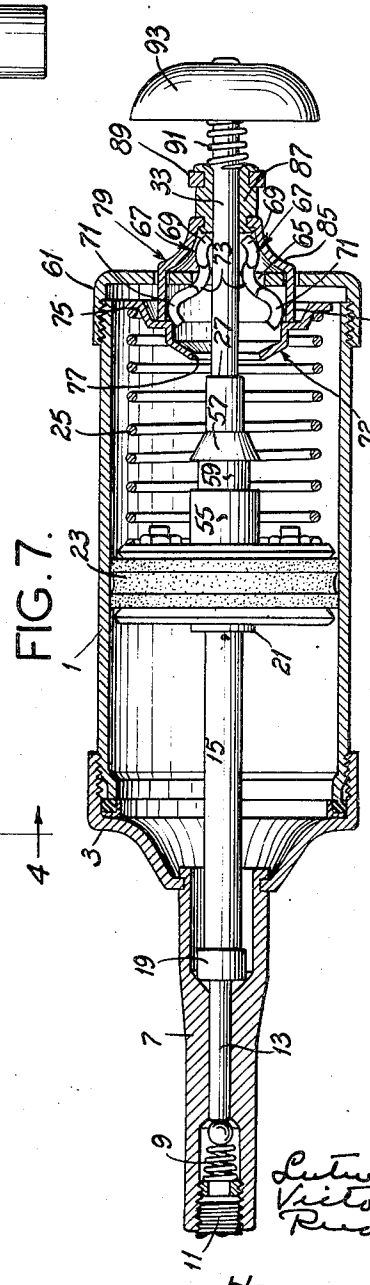

FIG. 7.

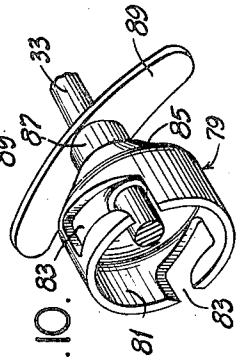

FIG. 10.

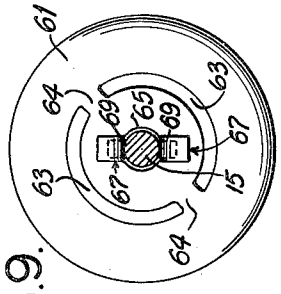

FIG. 9.

Lutwin C. Rotter,
Victor G. Klein,
Rudy F. Schneller,
Inventors.
Haynes and Koenig,
attorneys.

Oct. 24, 1944. L. C. ROTTER ET AL 2,361,125

PUMP

Filed Sept. 20, 1943 3 Sheets-Sheet 3

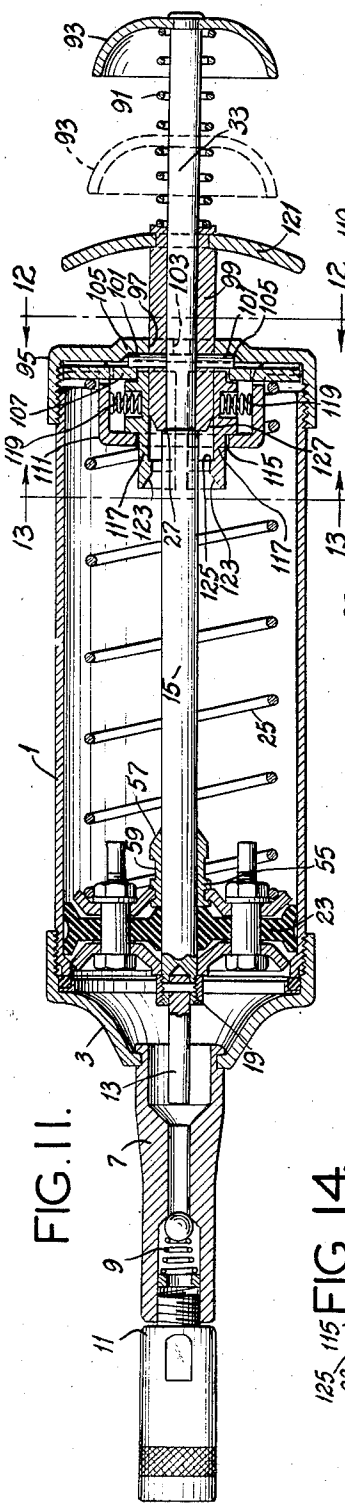

FIG. 11.

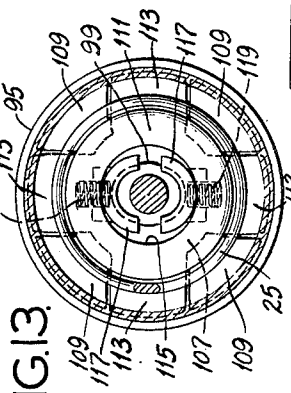

FIG. 13.

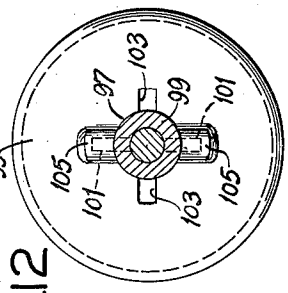

FIG. 12.

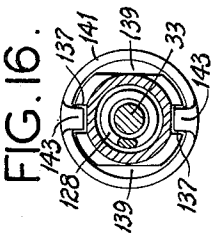

FIG. 16.

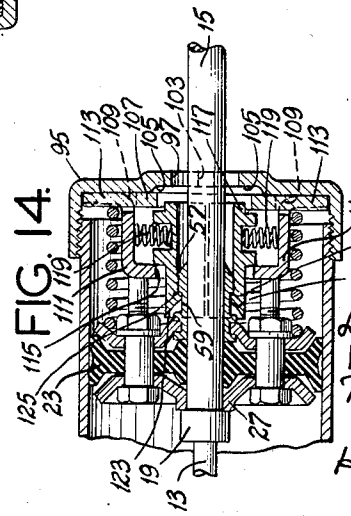

FIG. 14.

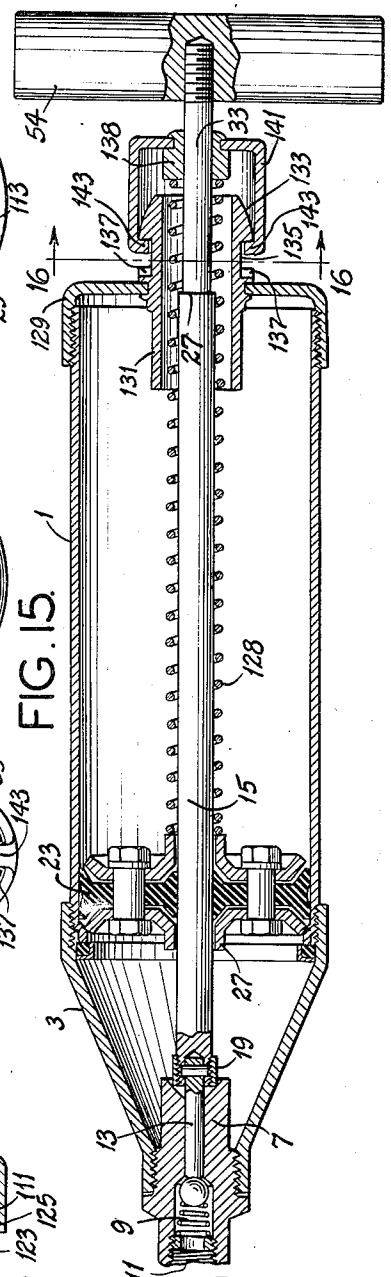

FIG. 15.

Ludwig C. Rotter,
Victor G. Klein,
Rudy F. Schneller,
Inventors
Haynes and Koenig
Attorneys.

Patented Oct. 24, 1944

2,361,125

UNITED STATES PATENT OFFICE

2,361,125

PUMP

Lutwin C. Rotter, Maplewood, and Victor G. Klein, and Rudy F. Schneller, St. Louis, Mo., assignors to Lincoln Engineering Company, St. Louis, Mo., a corporation of Missouri

Application September 20, 1943, Serial No. 503,058

9 Claims. (Cl. 222—128)

This invention relates to pumps, and with regard to certain more specific features, to hand-operated pumps for pumping lubricants, caulking, and similar semi-solid materials.

Among the several objects of the invention may be noted the provision of a conveniently operable hand pump in which the containing barrel is substantially coaxial with the line of push and in which is a biased follower which is retractable for filling purposes; the provision of a follower control operating as a stroke limiting device; the provision of a pump of the class described in which a condition of retraction may be maintained for purposes of filling but in which release may be easily accomplished by the same hand that operates to pump; and the provision of apparatus of this class which is simple and compact in form. Other objects will be in part obvious and in part pointed out hereinafter.

The invention accordingly comprises the elements and combinations of elements, features of construction, and arrangements of parts which will be exemplified in the structures hereinafter described, and the scope of the application of which will be indicated in the following claims.

In the accompanying drawings, in which are illustrated several of various possible embodiments of the invention,

Fig. 1 is a longitudinal section showing one form of the invention in a follower-released position, the pump being about empty;

Fig. 2 is a view similar to Fig. 1 but fragmentary and showing a retracted latched condition of a follower;

Fig. 3 is a vertical section taken on line 3—3 of Fig. 1;

Fig. 4 is a view similar to Fig. 3 but showing conditions like those in Fig. 2, being taken on line 4—4 of Fig. 2;

Fig. 5 is a fragmentary side elevation of certain control parts of Figs. 1 and 2;

Fig. 6 is a longitudinal section showing an alternative embodiment of the invention in a latched position of the follower latch;

Fig. 7 is a view similar to Fig. 6 but showing the follower unlatched and released;

Figs. 8 and 9 are vertical sections taken respectively on lines 8—8 and 9—9 of Fig. 6;

Fig. 10 is a perspective detail of a hand operated releasing member used in the Fig. 6 form of the invention;

Fig. 11 is a longitudinal section showing another alternative form of the invention with the follower in a released position;

Figs. 12 and 13 are vertical sections taken respectively on lines 12—12 and 13—13 of Fig. 11;

Fig. 14 is a fragmentary view similar to parts of Fig. 11 but showing the follower in retracted and latched position;

Fig. 15 is a longitudinal section showing another form of the invention; and,

Fig. 16 is a vertical section taken on line 16—16 of Fig. 15.

Similar reference characters indicate corresponding parts throughout the several views of the drawings.

Hand operated pumps for pumping semi-solid lubricants and the like are often preferred in a form in which the lubricant barrel is coaxial with the line of push exerted on the reciprocating, operating handle. However, the pumps have been built so that the necessary retraction of the internal follower is awkward. Furthermore, the mechanism, if any, used for retracting the follower has made it difficult to arrange a desirable limitation of the pumping stroke while material is being pumped.

Referring now more particularly to Figs. 1–5 which show one form of the invention to be described, numeral 1 shows a container cylinder enclosed at one end by a pump head 3 and at the other end by a closure cap 5. In the outlet head 3 is a pump cylinder 7 delivering through an outlet check valve 9. Valve 9 delivers to a suitable attached coupling 11 which may be of any of the types usually used for the purpose.

Reciprocating into and rearwardly out of the cylinder 7 is a plunger 13, wherewith lubricant is withdrawn from the container 1 and pumped to the coupling 11 through the check valve 9. The plunger 13 is coupled to an operating stem 15 which passes substantially coaxially through the cylinder 1 and rearwardly out of the cap 5 through an opening 17 as indicated. A connection 19 between the plunger 13 and the stem 15 provides a shoulder for contact with the nose 21 of a follower piston assembly 23. During pumping strokes, this contact does not occur between 19 and 21 because ordinarily, under a filled or partially filled condition of the container 1, the follower 23 is closer to the cap 5 than shown. In Fig. 1 the container 1 is about empty and ready for a refill. The follower 23 ordinarily in its other position is biased against any material in the container. This is accomplished by means of a compression spring 25 reacting from the cap 5.

The back stroke of the plunger 13 is limited by the fact that the stem 15 is shouldered as indicated at 27 and while this shoulder may pass

through the opening 17 its further movement is normally limited by contact with a bushing 29 of a then-fixed latch control cup 31. This cup 31 while being slidable on the reduced section 33 of the stem 15 during filling operations (see Fig. 2), is fixed in position on a protrusion 35 of said cap 5 during pumping operations. Fixation is accomplished by bayonet grooves 37 formed in the cup 31. These grooves are engageable with bayonet lugs 39 arranged on a protrusion 35 of cap 31 (see Figs. 1, 3, and 5).

Arranged crosswise in the protrusion 35 is a laterally movable latch 41 formed as a yoke 43 in which is an opening 45. Extending from opposite sides of the yoke 43 are rectangular tongues 47 which slide through opposite rectangular openings 49 in the protrusion 35. A spring 51 biases the latch from the position shown in Fig. 3 toward that shown in Fig. 4. Bias is prevented when the control cup 31 is telescoped over the protrusion 35 and bayonet-locked into position, as indicated in Figs. 1, 3 and 5. There then occurs camming of the latch 41 into the centered position shown in Fig. 3. The cup 31 flares as shown at 53 so as to effect said camming. Thus telescoping and rotary latching of the cup 31 on the protrusion 35 results in camming the latch 41 into the centered position of the opening 45. In either the centered or eccentric positioning of the opening 45, the shoulder 57 may pass back and forth through said opening 45 and to the opening 17. When the cup 31 is in attached position engagement occurs between the shoulder 27 and the bushing 29 for limiting the backward stroke of the plunger 13. The opening 45 when centered (Figs. 1 and 3) admits free sliding in either direction of a catch member 55 which forms an extension from the follower piston 23. Catch 55 slides on the stem 15. The catch member 55 carries an axial cam 57 and behind this is a groove 59. Thus when the parts are as shown in Fig. 1, even though the groove 59 be brought within the opening 45, the spring 25 may bias the follower 23 against any material in the container 1. Such bias tends to prime said material into the cylinder 7 when the plunger 13 is withdrawn on the back-stroke to the extent limited by engagement between shoulder 27 and the bushing 29.

On the other hand, when the control cup 31 is released and drawn back as shown in Fig. 2, the spring 51 biases the latch 41 sidewise as shown also in Fig. 4. Thereupon, since the stop 29 is no longer effective in connection with the shoulder 27, the rod 15 may be withdrawn by pulling on the handle 54 as shown in Fig. 2. Under such conditions, the shoulder 19 (behind plunger 13) contacts the nose 21 of follower 23, thus pulling back the follower against pressure of the spring 25. Then the cam 57 temporarily deflects the latch 43 as the latter is approached and thereafter said latch drops in behind the cam 57 into the groove 59. Final rearward motion is limited by contact between cam 57 and the inside of the cap 5. Thus the latch 41 holds the catch 55 and the follower 23 is permanently retracted despite pressure from spring 25, so that the container 1 may be conveniently refilled. Refilling is of course done with the head 3 removed by unthreading. After filling, and replacement of the head 3, the rod 15 may be again pushed into the container 1, that is, into pumping position, after the control cup 31 has been replaced in its bayonet catch position on the protrusion 35, as shown in Figs. 1 and 5. Then during reciprocation of stem 15 from handle 54, the follower 23 is biased by the spring 25 to feed lubricant toward the cylinder 7.

Referring to Figs. 6–10, another embodiment of the invention will now be described. Reference numerals used in connection with the above description will be again used where there is functional correspondence.

The cap at the rear end being quite different in form (though not in broad function) has been given the reference character 61. This cap is flat and provided with two crescent shaped openings 63 as shown in Fig. 9. It is also provided with a key-shaped opening 65 for centrally accommodating the stem 15 and extended to accommodate two floating clutch jaws 67. Each jaw 67 has an outside tail portion 69 and an inside catch portion 71. Between these portions 69 and 71 each is curved as at 73. Part 73 is retained in the lateral extensions of the openings 65 and by contact with the sliding stem 15. The clutch jaws 67 are biased shut (toward their Fig. 6 position) by means of an axially movable, cup-shaped camming member 72 which has a flange 75 and a hollow conical end 77. The biasing spring 25 rests and pushes upon the flange 75, and thus besides biasing the follower 23 to the left, biases the camming member 72 to the right. If not interferred with the member 72 will be pushed to a position wherein the flange 75 rests upon the inside of the cap 61 (see Fig. 6). Under such conditions, the cone shaped portion 77 cams inwardly the inner ends 71 of the jaws 67.

In its other position (Fig. 7) the camming member 72 releases the jaws 67 so that their portions 71 may move outward. The member 72 is adapted to be moved to the Fig. 7 position by means of the control cup 79, shown completely in Fig. 10. This cup comprises a cylindrical part 81 provided with bayonet slots 83 and a conical part 85, the latter being attached to a bushing 87 which supports a finger grip member 89. The bushing 87 forms a sliding engagement with the reduced section 33 of the stem 15. A spring 91 reacts between the bushing 87 and a grip 93 carried on the extension 33. The grip 93 is the grip for reciprocating the stem 15 and is therefore for operating the pump. By means of the hand which holds the grip 93, the fingers may be engaged with the grip 89 to operate the control cup 79. The diameter of the cylinder 81 is such that the portions between the bayonet slots 83 may be introduced into the openings 63. The portions 64 between openings 63 pass into the bayonet slots 83. Therefore, by pushing the control cup 79 into the openings 63 and turning it counterclockwise, the camming member 73 may permanently be placed in the position shown in Fig. 7 wherein the jaws 67 are released. They are then cammed open by the cone 85 on cup 79. On the other hand, by rotating the control cup 79 clockwise and withdrawing it from the cap 61, the bias of spring 25 will move the camming member 72 to cam the jaws 67 shut as shown in Fig. 6.

When the control cup 79 is fixed on the cap 61, the bushing 87 is in fixed position behind the open jaws 67. Thus although the shoulder 27 may be brought through the jaws, the back-stroke of the stem 15 is limited by engagement of shoulder 27 with the then fixed bushing 87. Also, at this time, even though the catch 55 (including parts 59 and 57) should be within the confines of the jaws 67, the latter will not grip. Thus, the follower 23 will advance freely toward the head 3 under compression from spring 25 to

feed material to the pump cylinders 7. This occurs while the plunger 13 is reciprocated through the stem 15 and grip 93.

When the cup 79 is rotated clockwise and withdrawn from the cap 61 to the position shown in Fig. 6, the support for the camming member 73 is withdrawn whereupon the spring 25 biases said member 73 into engagement with the cap 61 and causes the cone 77 to bias inwardly the gripping portion 71 of the jaws 67. Since the bushing 87 has now been withdrawn, it is now possible to move back the stem 15 by pulling back on the member 93. Engagement of the shoulder 19 with the nose 21 of the follower 23 will result in driving the catch 55 into position between the ends 71 of the jaws 67. These jaws temporarily ride up the cam 57 and then drop into the groove 59 under bias from the conical portion 77. The result is that the follower is held back in the position shown in Fig. 6. Reloading the container 1 may then be carried out. After loading, the jaws are released as above indicated and as is shown in Fig. 7, that is, by again inserting and attaching the control cup 79 to the cap 61.

The spring 91 is to effect a return stroke for the pumping action when the device is organized as in Fig. 7.

In Figs. 11 to 14 is shown another form of the invention in which like numerals again designate like-functioning parts, so far as applicable. In this case the cap on the container 1 again has a new form and numeral 95 has been applied thereto. It has an opening 97 for accommodating the latch control member 99 which is in the form of a cylinder sliding on the extension 33 and passing through said opening 97. This control member 99 carries laterally extending pins 101 which in one angular position of the control member may pass through extension 103 of the opening 97. In a 90-degree removed position, when within the cap, the pins 101 seat in sockets 105 of cap 95 (Fig. 12). These pins 101 are located under a ring 107 having radially extending legs 109 (Figs. 11 and 13). The spring 25 biases against the legs 109. Thus the ring 107 is normally pressed against the pins 101 and seats them in the sockets 105. The spring 25 reacts from the follower 23 while at the same time biasing it.

Inside of the ring 107 is a cup-shaped member 111, the base of which is cruciform and provided with legs 113 between the legs 109. Since the spring 25 also is above these legs 113 it also holds the cup-shaped member 111 in place. The cup-shaped member 111 has a central opening 115 through which extend two hollow jaws 117. These jaws spread and accommodate the control cylinder 99 when the latter is moved inward, as indicated in Figs. 11 and 13. They are biased inwardly against spreading by radial springs 119 within the cup 111.

When the control cylinder 99 is withdrawn by finger action on the handle 121 thereon, as indicated in Fig. 14, the springs 119 push the jaws 117 inward. Then when the follower 23 is drawn back (by drawing back the stem 15 which contacts shoulder 19 with nose 21) the catch 55 forces its camming portion 57 into the jaws 117, which are beveled for the purposes, as shown at 123. This causes lug portions 125 on the jaws to drop into the groove 59 and to hold back the follower against the expansion of the spring 25. When the control member 99 is reinserted through the opening 97 (the pins 101 passing through the openings 103) the nose of the cylinder 99 being beveled at 127 for the purpose, wedges the jaws apart so as to release them from the catch part 55, 59 and 57, whereupon the follower is free for biased movement under action of the spring 25. Of course the control member 99 is held in this inserted position as shown in Figs. 11 and 12 by rotating it so that the pins 101, after entry through the openings 103 will become seated in the sockets 105. It will be noted that the outside diameters of members 109 and 113 are larger than the inside diameter of table 1. Hence members 109 and 113 can move only enough to accommodate rotation of pins 101 out of the recesses 105. They cannot move down into the tube 1.

In Figs. 15 and 16 is shown a form of the invention in which no hold-back means is shown for the follower 23, like numerals designating like functioning parts again. In this case the biasing spring for the follower 23 more closely hugs the stem 15 and has therefore been renumbered as 128. The cap has been renumbered as 129 and carries centrally a fixed bushing 131 through which the stem 15 and the spring 128 are adapted to pass. This bushing on the outside is provided with a head 133 behind which is a groove 135 with recessed portions 137 formed by radial milling. At 90 degrees to the recessed portions 137 are flats 139. On the reduced portion 33 of the stem is a sliding bushing 138 held in the center and bottom of a cup 141. The latter has turned-in lugs as indicated at 143. These lugs are adapted in one position to pass over the flats 139 and upon 90-degree rotation to seat in the recesses 137. This is under bias of the bushing 138 from spring 128. On the other hand when the cup 141 is turned 90-degrees from the position shown in Fig. 15 and released, the stem 15 and spring 128 along with the follower may be drawn back for refilling purposes. The chief point in connection with Figs. 15 and 16 is that the bushing 138, when the cup 141 is in fixed position on the bushing 131, acts as a stop for the shoulder 27 so that the back-stroke of the pump is limited.

Attention is hereby directed to the copending application of Victor G. Klein, one of the applicants herein, Serial No. 503,060, dated September 20, 1943, for Dispenser.

In view of the above, it will be seen that the several objects of the invention are achieved and other advantageous results attained.

As many changes could be made in the above constructions without departing from the scope of the invention, it is intended that all matter contained in the above description or shown in the accompanying drawings shall be interpreted as illustrative and not in a limiting sense.

We claim:

1. A pump comprising a container, a cylinder carried on the container and communicating therewith and having an outlet, a plunger reciprocating into and out of said cylinder, a driving stem supporting said plunger and passing through the container, a cap accommodating egress of the stem from the container, a follower in the container and surrounding said stem, spring means biasing the follower toward the cylinder, a catch carried by the follower, a latch adjacent said cap, and a movable control member operative from the outside of said cap and cooperating with said latch through open means in the cap so that in one position of the control member, the latch is automatically operative to hold said catch, and in another position of the control member to release said latch, means cooperating between the

stem and the follower whereby the latter may be forced by withdrawal of the stem from the container into cooperative position with respect to said latch but allowing reinsertion of the stem into the container whether or not the follower is biased away from said latch, and cooperating means between said control member and the stem whereby when the control member is in latch-releasing position, reciprocation of the stem is limited to an amount only sufficient to operate the plunger with respect to the cylinder for pumping of material from the container to the outlet.

2. A pump comprising a container, a pumping mechanism at one end of the container, a cap at the other end thereof, a reciprocating stem passing from said pumping mechanism through said container and out of the cap and provided exteriorly with hand operating means, a follower in said container, a spring biasing said follower toward the pumping mechanism, a catch movable with the follower, latching means for said catch located within said cap, a control member outside of said cap and sliding on said stem beneath said hand operating means, and quick detachable means between said control member and said cap, means biasing said latch to a position in which it will hold the catch when the latter is brought into cooperative position with the latch, and a cooperating means between said control member and said latch whereby when the control member is attached to the cap, said latch is in releasing position with respect to said catch, stop means associated with the control member, and a portion on the reciprocating stem engageable with said stop means when the control member is in attached position to the cap, in which position said latch is in said catch releasing position.

3. A pump comprising a container, a pumping mechanism at one end of the container, a cap at the other end thereof, a reciprocating stem passing from said pumping mechanism through said container and out of the cap and provided exteriorly with hand operating means, a follower in said container. a spring biasing said follower toward the pumping mechanism, a catch movable with the follower, latching means for said catch located within said cap, a control member outside of said cap and sliding on said stem beneath said hand operating means, means biasing said latch to a position in which it will hold the catch when the latter is brought into cooperative position with the latch, and cooperating means between said control member and said latch whereby when the control member is attached to the cap, said latch is in releasing position with respect to said catch, said cap being formed as a protrusion and said control member being formed as a cup telescoping therewith, a bayonet catch means between the cup and the protrusion, said latch comprising a laterally slidable yoke borne within openings in said protrusion and freely surrounding said stem, and said catch comprising a member adapted to be held by said latch when the latter is disengaged by the cup.

4. A pump comprising a container, a pumping mechanism at one end of the container, a cap at the other end thereof, a reciprocating stem passing from said pumping mechanism through said container and out of an opening in the cap, a hand-operating means on the stem, a follower in said container, a spring biasing said follower toward the pumping mechanism, a catch movable with the follower, latching means for said catch located within said cap, a control member outside of said cap and sliding on said stem, quick-detachable means between said control member and said cap, means normally biasing said latch to a position in which it will hold the catch when the latter is brought into cooperative position, and cooperating means between said control member and said latch whereby when the control member is attached to the cap, said latch is placed in releasing position with respect to said catch.

5. A pump comprising a container, a pumping mechanism at one end of the container, a cap at the other end thereof, a reciprocating stem passing from said pumping mechanism through said container and out of an opening in the cap, a hand-operating means on the stem, a follower in said container, a spring biasing said follower toward the pumping mechanism, a catch movable with the follower, latching means for said catch located within said cap, a control member outside of said cap and sliding on said stem. quick-detachable means between said control member and said cap, means normally biasing said latch to a position in which it will hold the catch when the latter is brought into cooperative position, and cooperating means between said control member and said latch whereby when the control member is attached to the cap, said latch is placed in releasing position with respect to said catch, said latch comprising rocking jaws pivotally held in accommodating portions of said opening in the cap and reaching through the cap while rocking on the stem, a cone member biased toward the cap by said spring, said quick-detachable means comprising a bayonet-shaped means engageable through openings in said cap to contact with said cone member to hold the latter out of biasing engagement with said jaws when the control member is attached to the cap.

6. A pump comprising a container, a pumping mechanism at one end of the container, a cap at the other end thereof, a reciprocating stem passing from said pumping mechanism through said container and out of an opening in the cap. a hand-operating means on the stem, a follower in said container, a spring biasing said follower toward the pumping mechanism, a catch movable with the follower, latching means for said catch located within said cap, a control member outside of said cap and sliding on said stem, quick-detachable means between said control member and said cap, means normally biasing said latch to a position in which it will hold the catch when the latter is brought into cooperative position, cooperating means between said control member and said latch whereby when the control member is attached to the cap, said latch is placed in releasing position with respect to said catch, said latch comprising rocking jaws pivotally held in accommodating portions of said opening in the cap and reaching through the cap while rocking on the stem, a cone member biased toward the cap by said spring, said quick-detachable means comprising a bayonet-shaped means engageable through openings in said cap to contact with said cone member to hold the latter out of biasing engagement with said jaws when the control member is attached to the cap, and conical means on the quick-detachable means engageable with the outside portions of said jaws to rock them out of catch-holding positions when the pick-detachable means is attached.

7. A pump comprising a container, a pumping mechaism at one end of the container, a cap at

the other end thereof, a reciprocating stem passing from said pumping mechanism through said container and out of an opening in the cap and provided exteriorly with hand-operating means, a follower in said container, a spring biasing said follower toward the pumping mechanism, a catch movable with the follower, latching means for said catch located within said cap, a control member outside of said cap and sliding on said stem and located beneath said hand-operating means, quick detachable means between said control member and said cap, means biasing said latch to a position wherein it will hold the catch when the latter is brought into cooperative position, and cooperating means between said control member and said latch whereby when the control member is attached to the cap, said latch is released, said latch comprising radially movable jaws within the cap, means biasing the jaws inwardly, said control member outside of the cap being carried on the stem and movable through an opening in the cap for engagement with said latch interiorly of the cap to overcome said bias and allow free motion of the follower independently of the latch.

8. A pump comprising a container, a pumping mechanism at one end of the container, a cap at the other end thereof, a reciprocating stem passing from said pumping mechanism through said container and out of an opening in the cap and provided exteriorly with hand-operating means, a follower in said container, a spring biasing said follower toward the pumping mechanism, a catch movable with the follower, latching means for said catch located within said cap, a control member outside of said cap and sliding on said stem beneath said hand-operating means, and quick-detachable means between said control member and said cap, means biasing said latch to a position wherein it will hold the catch when the latter is brought into cooperative position with the latch, and cooperating means between said control member and said latch whereby when the control member is attached to the cap, said latch is placed in releasing position with respect to said catch, said latch comprising radially movable jaws within the cap, means biasing the jaws inwardly, said control member outside of the cap being carried on said stem and movable through an opening in the cap for engagement with said latch interiorly of the cap to overcome said bias and allow free motion of the follower independently of the latch, the jaws constituting semi-cylindric members arranged around said stem, said control member constituting a cylinder movable on the stem and insertable between the jaws to expand them against said bias, and a bayonet catch arrangement between said control cylinder and the catch.

9. A pump comprising a container, a cap therefor having a bayonet opening, a follower in the container having a catch, an axial spring biasing the follower from the cap, hemi-cylindric latching jaws within the cap cooperative with the catch to hold back the follower, means surrounding said jaws provided with radially operative spring means biasing said jaws toward latching position, a plate within the cap and resiliently held in position by said axial spring, bayonet control means operable through said bayonet opening adapted to spread said jaws to release position and upon rotation to be resiliently gripped between the cap and said resiliently positioned plate.

LUTWIN C. ROTTER.
VICTOR G. KLEIN.
RUDY F. SCHNELLER.