June 23, 1931. J. GELOSO 1,811,464

SOCKET

Filed June 15, 1928

Fig. 1.

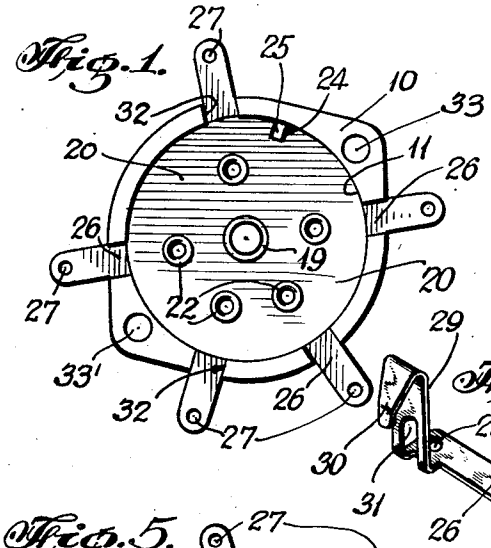

Fig. 2.

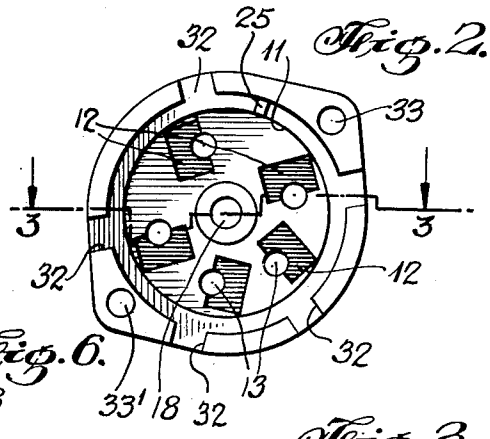

Fig. 3.

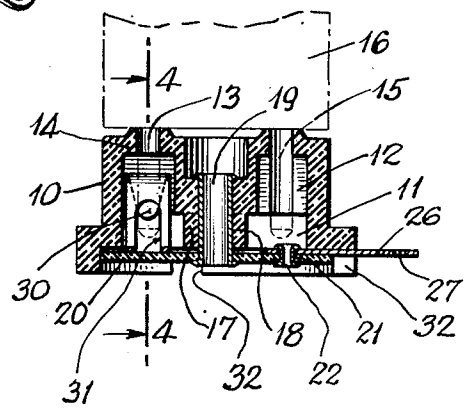

Fig. 4.

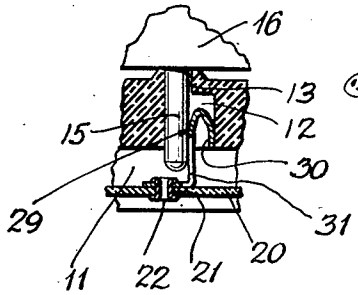

Fig. 5.

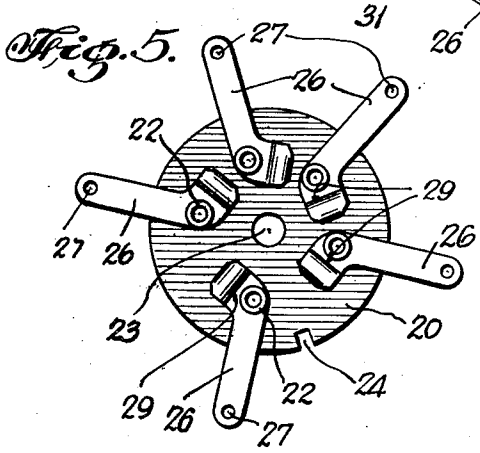

Fig. 6.



INVENTOR

BY

ATTORNEY

Patented June 23, 1931 1,811,464

UNITED STATES PATENT OFFICE

JOHN GELOSO, OF NEW YORK, N. Y., ASSIGNOR, BY MESNE ASSIGNMENTS, TO PILOT RADIO & TUBE CORPORATION, OF BROOKLYN, NEW YORK, A CORPORATION OF DELAWARE

SOCKET

Application filed June 15, 1928. Serial No. 285,517.

This invention relates to tube sockets, being particularly directed to a novel form of tube socket for use, on pronged tubes or other electrical contacting or coacting elements, such as inductances.

Generally, it is an object of this invention to provide for a novel form of socket, comprising a carrier element, having therein, a series of chambers, into which resilient contacts are adapted to be positioned, which resilient spring contacts are adapted to be so arranged, as to provide for direct resilient contact with the prongs, of the element, supported by the socket, which prongs pass through apertures, formed in the upper surface of the carrier, at a point, and in the proximity of the chambers within the carrier.

Specifically, it is aimed to provide for a novel form of socket, having an insulating carrier plate, to which there is adapted to be fixed unitary flexible strips of metal, stamped so as to have angularly disposed and offset portions thereof, positioned within chambers in the socket, and contacting with prongs of electrical instruments such as vacuum tubes, depending in said chambers, the strips being attachable centrally, of their length, to the carrier plate, which is positioned at the base of the socket, the lengths of the strips extending from the point of fastening thereof to the carrier, being adapted to pass through grooves within the base of the socket, for providing terminal connections with the remaining elements of the radio receiver.

Still further, it is aimed to provide for a novel form of socket, in which a carrier member has positioned conductor members thereon of which contact portions extending upwardly therefrom, into chambers formed in the body of the socket, whereby pressure contact with the prongs of an electric circuit depending from the top of said socket, is made, the free ends of the respective conductor members being adapted to be extended radially of one another, along the carrier, and passing through grooves formed on the outer periphery of the base of the socket, so as to provide for insulation of the conductors from one another, and for proper terminal connections with the remainder of the receiver.

Specifically then, it is an object of this invention, to provide for a completely enclosed socket member, within which there are positioned a series of flexible contacts, all of which lead to terminal points exteriorly of said socket, all of which contacts are insulated one from the other, and are disposed respectively in chambers formed in the socket, into which chambers prong members of radio reception elements, supported by the socket, are adapted to be contacted by said conductors.

These and other advantages, capabilities and features of the invention will appear from the said joint detailed description of one specification embodiment of the invention as illustrated in the accompanying drawings, in which

Fig. 1 is a plan view looking upwardly, of the device in actual use.

Fig. 2 is a plan view looking upwardly of the device with the base cover removed.

Fig. 3 is a side elevation in section along lines 3—3 of Fig. 2.

Fig. 4 is a side elevation in section along lines 4—4 of Fig. 3.

Fig. 5 is a plan view of the base looking downwardly from the top.

Fig. 6 is a perspective view of the conductor member.

Referring to the reference characters in the drawings, numeral 10, represents a casing formed of a phenolic condensation product, and hollowed interiorly as at 11, and containing a series of chambers 12, extending upwardly from the base towards the top of the casing, as shown in Fig. 3, and terminating adjacent the top 14 of the casing, in which there are formed a series of apertures 13, leading from the top 14 of the casing into the chambers 12, the apertures 13, being cylindrical within the top of the casing and being adapted to assume a semi-cylindrical form, along the length of the chambers, whereby portions of the prongs 15, of a vacuum tube 16, or other electrical element, will be positioned within the cylindrical cut out portion adjacent the chamber walls and forming the

extension of the aperture 13, while the other halves of these prongs, will project into the chamber 13 proper, for contacting with the conductors, the function of which will be later described.

A hub 17, is formed centrally of the casing, and projects downwardly therein, for a greater portion of its depth, there being adapted to be passed through an aperture 18, in said hub, an eyelet here being indicated as the preferred fastening means for maintaining the base cover 20, and carrying the conductor elements 21 therein, in position with respect to the casing, so that the conductor element, may be adapted to form the proper contact with the prongs 15, extending therein, and lead outwardly to the proper terminal points of the associated electrical elements, with which this socket member is applied.

Referring to Figures 1, 3, 4, 5 and 6, it is observed that the carrier or cover member 20, comprises of a flat disk formed preferably of a phenolic condensation product, having a series of apertures 21 therein, through which eyelets 22, may be passed for fixing the contact members 21 thereto, in a manner to be later described.

A central aperture 23, is formed within the carrier, for providing for means, whereby the eyelet 19, may be passed through for fastening the carrier to the casing, at the hub portion 17 thereof. A cut out portion 24, is formed on the outer periphery of the carrier 20, which aperture is adapted to have fit therein a projection 25, formed on the inner surface of the casing 10, whereby the carrier with the conductor members 21 thereon, may be readily and easily positioned in the hollow portion 11 of the casing, so that the flexible contact portion of the conductors may be properly positioned within the chambers 12, with a minimum of effort, and so that once the carrier with its conductors is positioned in assembled relationship, it cannot be rotated.

Referring to Figures 3, 4, 5 and 6, it is seen that the conductor comprises a length of flexible metal, either tin, brass or aluminum, having a base portion 26, adapted to rest flat against the carrier 20, and having a plurality of apertures 27 and 28, of which 28, is adapted to be aligned with the apertures 21, in the carrier, and through which an eyelet 29 is adapted to be passed to fix the conductor to the carrier; the aperture 27 formed at the extremity of the flat portion of the conductor being adapted to form the contact terminal with the remaining elements, with which this device is applied. Offset and angularly disposed of the base portion 26 of the conductor, there is adapted to be formed the pressure head of the conductor, comprising a prong contact portion 29, at right angles to the base 26 of the conductors, and the wall contact portion 30, the wall contact portion forming the extremity of the conductor, being bent over upon itself to form an angularly disposed flexible pressure contacting portion, cooperating with the wall of the chamber 12, as shown in Fig. 4, and the portion 29, being adapted to be contacted by the prong 15, as shown in Fig. 4. A cut out portion 31, is formed in the conductor and extends for a portion of the length of the offset portion 29, and the flat portion 26, the purpose of this aperture being to provide for facility in bending the conductor into position, and simplicity in structural formation thereof.

When the carrier 20, with the projecting resilient conductor portions 21, is assembled as in Fig. 5, this assembled section of the device is forced into the hollow portion 11, of the casing 10, as shown in Fig. 2, to provide for the structure shown in Figure 1, there being formed in the base of the casing, a series of channels 32, through which the extremities of the flat portion 26, of the conductors may pass for interconnection, to provide for the terminal connection of the socket, the said flat portion 26, of the conductor being adapted to extend considerably above the base of the casing, so as to prevent the conductor from contacting with any other conductors or devices within the radio receiver, which may be extended on the base or subpanel of the same, adjacent the socket.

As seen in Figures 2 to 6 inclusive, the conductor member 26, is adapted to have the contact portion 29 of the flexible pressure portion 30, formed integral therewith, positioned within the respective chambers 12, wherein the depending prongs 15 of the vacuum tube or other electrical devices, are adapted to be insertable with one half or equivalent fraction of the prong, being positioned in the groove 13, formed adjacent the chamber, and the other projecting half, thereof, contacting with the contact portion 29 of the conductor, spaced from the opposing wall by the flexible pressure member 30, formed integral therewith.

The angular groves 32, formed in the base of the casing are disposed angularly of the chambers 12, so that the flat portion 26, of the conductor 21, offset from the contact portion 29 thereof, may be retained in fixed position in the casing, for providing the terminal contacts with the remaining elements of the receiver through the apertures 27 thereof. Apertures 33 and 33′ are provided in the base of the casing, for the passage therethrough of the fastening means to fix the casing to a subpanel or any part of the receiver to which the socket is desired to be attached.

It is obvious that various changes and modifications may be made to the details of construction without departing from the general spirit of the invention as set forth in the appended claim:

What I claim:

A socket for a vacuum tube, comprising a casing having a series of chambers formed interiorly thereof adjacent its periphery, apertures disposed in the top of said casing, forming the termination of said chambers, an aperture formed centrally in the top of said casing and merging into a smaller aperture extending to the base of said casing, a carrier plate positioned at the base of said casing for enclosing the chambers therein, resilient conductor members positioned in the respective chambers for contacting with the prongs of a vacuum tube passing through the apertures leading thereto, said conductors being fixed intermediate their ends to said carrier member and extending radially from said carrier member for forming contacts with elements in a radio circuit, said conductors being adapted to rest in cutout portions along the periphery of the casing at the base thereof, an aperture disposed centrally of said carrier in line with the central aperture of the casing, and a rivet for fastening the casing and said carrier at their central apertures, and a cutout portion on the outer periphery of said carrier, and a projection in the base of said casing for positioning the carrier, so as to locate the contact members in their proper chambers, and to prevent displacement thereof.

JOHN GELOSO.