(12) INTERNATIONAL APPLICATION PUBLISHED UNDER THE PATENT COOPERATION TREATY (PCT)

(19) World Intellectual Property Organization
International Bureau

(43) International Publication Date
27 August 2015 (27.08.2015)

WIPO | PCT

(10) International Publication Number
WO 2015/126833 A1

(51) International Patent Classification:
B60C 23/04 (2006.01)

(21) International Application Number:
PCT/US2015/016176

(22) International Filing Date:
17 February 2015 (17.02.2015)

(25) Filing Language: English

(26) Publication Language: English

(30) Priority Data:
14/185,511 20 February 2014 (20.02.2014) US

(71) Applicant: **CONTINENTAL AUTOMOTIVE SYSTEMS, INC.** [US/US]; One Continental Drive, Auburn Hills, Michigan 48326 (US).

(72) Inventors: **DENIAU, Jean-Christophe**; 12125 Center Road, Fenton, Michigan 48430 (US). **FARRELL, Brian J**; 984 Bridge Park, Troy, Michigan 48098 (US).

(74) Agents: **BENDER, Ronald P.** et al.; Continental Automotive Systems, Inc., One Continental Drive, Auburn Hills, Michigan 48326 (US).

(81) Designated States *(unless otherwise indicated, for every kind of national protection available)*: AE, AG, AL, AM, AO, AT, AU, AZ, BA, BB, BG, BH, BN, BR, BW, BY, BZ, CA, CH, CL, CN, CO, CR, CU, CZ, DE, DK, DM, DO, DZ, EC, EE, EG, ES, FI, GB, GD, GE, GH, GM, GT, HN, HR, HU, ID, IL, IN, IR, IS, JP, KE, KG, KN, KP, KR, KZ, LA, LC, LK, LR, LS, LU, LY, MA, MD, ME, MG, MK, MN, MW, MX, MY, MZ, NA, NG, NI, NO, NZ, OM, PA, PE, PG, PH, PL, PT, QA, RO, RS, RU, RW, SA, SC, SD, SE, SG, SK, SL, SM, ST, SV, SY, TH, TJ, TM, TN, TR, TT, TZ, UA, UG, US, UZ, VC, VN, ZA, ZM, ZW.

(84) Designated States *(unless otherwise indicated, for every kind of regional protection available)*: ARIPO (BW, GH, GM, KE, LR, LS, MW, MZ, NA, RW, SD, SL, ST, SZ, TZ, UG, ZM, ZW), Eurasian (AM, AZ, BY, KG, KZ, RU, TJ, TM), European (AL, AT, BE, BG, CH, CY, CZ, DE, DK, EE, ES, FI, FR, GB, GR, HR, HU, IE, IS, IT, LT, LU, LV, MC, MK, MT, NL, NO, PL, PT, RO, RS, SE, SI, SK, SM, TR), OAPI (BF, BJ, CF, CG, CI, CM, GA, GN, GQ, GW, KM, ML, MR, NE, SN, TD, TG).

Published:

— *with international search report (Art. 21(3))*

(54) Title: APPARATUS AND METHOD FOR CHANGING FREQUENCY DEVIATION

(57) Abstract: A protocol to be used in the transmission is determined. Based upon the protocol, the transmission frequency range of a clock is selectively altered. TPMS data is transmitted according to the altered transmission frequency range of the clock.

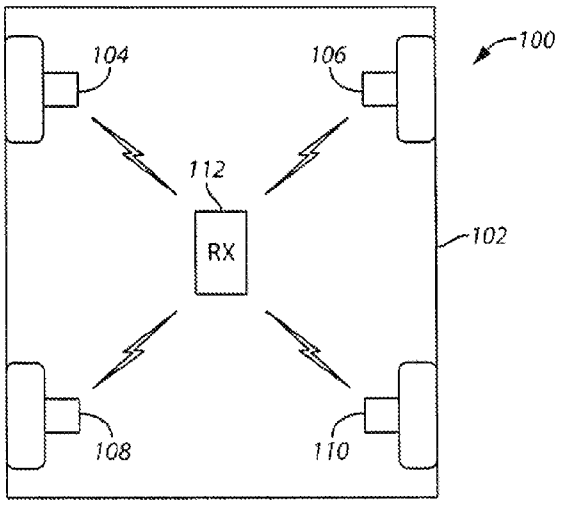

FIG. 1

WO 2015/126833 A1

APPARATUS AND METHOD FOR CHANGING FREQUENCY DEVIATION

TECHNICAL FIELD

[0001] This application relates to tire pressure sensors and, more specifically transmissions made to and from these devices.

BACKGROUND OF THE INVENTION

[0002] Tire pressuring monitoring (TPM) devices are used in today's vehicles. A tire pressure sensor senses the tire pressure reading (or other conditions, such as the temperature of the tire). These sensed readings may be communicated to a TPM receiver that is disposed in the vehicle. A display screen may also be coupled to the receiver. When the tire pressure reading falls below a particular threshold, the driver of the vehicle may be alerted, for example, by an alert message being displayed to the driver on the screen. The driver can then take any required action.

[0003] Most TPM sensors have a specific frequency deviation when they transmit frequency-shift keying (FSK) data. For example, the frequency deviation may be 315Mhz +/- 20hz or 40khz of deviation (or range). Thus, 314.98Mhz may be used for transmission of a logic "0" (in the FSK scheme) while 315.02Mhz may represent a logic 1. The exact frequency deviation is chosen when the TPM sensor is engineered and must be in accordance with the bandwidth and frequency discrimination of the receiver used to receive the FSK data.

[0004] Many TPM sensors have a FSK frequency deviation of between +/- 30Khz to +/- 50Khz. This means that the bandwidth of the receiver must be around 200kHz. A wide receiver bandwidth is cost effective, but is linked to more in-band noise coming from different sources. This in-band noise decreases the sensitivity of the sensor in some cases.

[0005] Some original equipment manufacturers (OEMs) require a smaller bandwidth receiver. Thus, the TPM sensor working with such a receiver must also limit its frequency deviation. In some cases, a TPM sensor with a wide frequency deviation may not be received at all by a narrow band receiver or can be attenuated.

BRIEF DESCRIPTION OF THE DRAWINGS

[0006] For a more complete understanding of the disclosure, reference should be made to the following detailed description and accompanying drawings wherein:

[0007] FIG. 1 comprises a block diagram of a system that changes FSK frequency deviation on the fly according to various embodiments of the present invention;

[0008] FIG. 2A comprises a block diagram of a FSK switching arrangement for a TPMS monitor with capacitors inside the PLL according to various embodiments of the present invention;

[0009] FIG. 2B comprises a block diagram of a FSK switching arrangement for a TPMS monitor with capacitors outside the PLL according to various embodiments of the present invention;

[0010] FIG. 2C comprises a frequency response graph showing frequency deviations according to various embodiments of the present invention;

[0011] FIG. 3 comprises a flowchart of an approach for FSK switching according to various embodiments of the present invention;

[0012] FIG. 4 comprises a block diagram of an apparatus that changes FSK frequency deviation on the fly according to various embodiments of the present invention.

[0013] Skilled artisans will appreciate that elements in the figures are illustrated for simplicity and clarity. It will further be appreciated that certain actions and/or steps may be described or depicted in a particular order of occurrence while those skilled in the art will understand that such specificity with respect to sequence is not actually required. It will also be understood that the terms and expressions used herein have the ordinary meaning as is accorded to such terms and expressions with respect to their corresponding respective areas of inquiry and study except where specific meanings have otherwise been set forth herein.

DETAILED DESCRIPTION

[0014] Approaches are provided that implement a frequency-shift keying (FSK) frequency deviation switch for multi-application tire pressure monitoring (TPM) sensors or for any different radio frequency (RF) transmitters requiring different frequency deviations. The frequency deviation of the transmitted FSK signal is adjusted based upon the protocol to be transmitted. The TPMS sensors (or monitors or wheel units) may include processing devices and memories and execute computer instructions to sense and transmit tire pressure (or other) data. In these regards, the TPMS sensors may themselves include structures, devices, or apparatus that actually sense the pressure (or other types of data) in the tire, and make transmissions of the sensed information.

[0015] In one aspect, the TPM sensor uses a phase locked loop (PLL) to modulate and transmit the FSK data to the receiver. In some cases, the PLL offers the ability to use internal capacitors instead of external capacitors to create the desired frequency deviation. Typically, TPM sensor manufacturers prefer to use external load capacitors to the crystal oscillator as these represent fixed values.

[0016] In the present approaches, a bank of capacitors is offered by a PLL of the TPM sensor and this bank of capacitors can be either switched on or off depending upon the frequency deviation that is required. The bank of capacitors can be implemented with discrete components.

[0017] In many of these embodiments, a protocol that is to be used in the transmission is determined. Based upon the protocol, the transmission frequency range (or deviation) of a clock is selectively altered. TPMS data is transmitted according to the altered transmission frequency range (or deviation) of the clock.

[0018] In some aspects, selected ones of a plurality of capacitors that are coupled to the clock are selectively switched in and out of the transmission circuit. In other aspects, the transmissions are performed according to a frequency-shift keying (FSK) approach. In still other examples, the protocol is a selected protocol from a plurality of protocol and each of the plurality of protocols is associated with a different automobile manufacturer.

[0019] In other aspects, the clock is a crystal oscillator. In yet other aspects, the approaches are performed by a phase-locked loop (PLL).

[0020] In others of these embodiments, an apparatus for transmitting tire pressuring monitoring system (TPMS) data includes an interface and a controller. The interface has an input and an output. The controller is coupled to the interface. The controller is configured to determine a protocol to be used in the transmission and, based upon the protocol, selectively produce control signals that alter the transmission frequency range (or deviation) of a clock. The controller is further configured to transmit TPMS data according to the altered transmission frequency range (or deviation) of the clock at the output.

[0021] Referring now to FIG. 1, a system 100 that changes FSK frequency deviation on the fly for a multi-application TPMS sensor is described. The system 100 includes a first TPMS monitor (or sensor or unit or wheel unit) 104, a second TPMS monitor 106, a third TPMS monitor 108, and a fourth TPMS monitor 110. The monitors 104, 106, 108, and 110 communicate with a receiver 112. The communication between the TPMS monitors 104, 106, 108, and 110 and the receiver 112 is accomplished in one aspect via wireless, radio frequency (RF) links.

[0022] The TPMS monitors 104, 106, 108, and 110 may include processing devices and memories and execute computer instructions to sense and transmit tire pressure (or other) data. In these regards, the TPMS monitors 104, 106, 108, and 110 may themselves include structures, devices, or apparatus that actually sense the pressure (or other types of data) in the tire.

[0023] The receiver 112 includes hardware and/or software to receive (and in some examples transmit) information from the TPMS monitors 104, 106, 108, and 110. The receiver 112 is disposed at an appropriate location within the vehicle 102.

[0024] The TPMS monitors 104, 106, 108, and 110 each implement at a minimum a FSK frequency deviation switch and are multi-application sensors. The sensors may also attenuate using amplitude-shift keying (ASK). That is, the monitors can change frequency deviation on the fly. In other words, the frequency deviation or range of the transmitted FSK signals from the TPMS monitors 104, 106, 108, and 110 are adjusted based upon the protocol to be transmitted.

[0025] In one aspect, the TPMS monitors 104, 106, 108, and 110 utilize a phase locked loop to modulate and transmit the FSK data to the receiver 112. In some cases, the

PLL offers the ability to use internal capacitors instead of external capacitors to create the desired frequency deviation. More specifically, a bank of capacitors is offered by a PLL and this bank of capacitors can be either switched on or off depending upon the frequency deviation that is required. The bank of capacitors can be implemented using discrete components.

[0026] Referring now to FIG. 2A and 2C, one example of a circuit 200 for changing FSK frequency deviation on the fly is described. The circuit 200 includes a phase locked loop (PLL) 202, a clock (e.g., crystal oscillator) 204, a FSK switch 206, a first capacitor (C1) 208, a second capacitor (C2) 210, a first frequency deviation selection switch 212, a second frequency deviation selection switch 213, a third capacitor (C3) 214, and a fourth capacitor (C4) 216 where C1, C2, C3 and C4 are the values of the capacitors.

[0027] The oscillator 202 oscillates at a certain frequency. If a high signal (a "1") is applied to the FSK switch 206, the switch 206 closes and the second capacitor (C2) 210 is shorted. A low "tone" with frequency equal to f1 is transmitted. If a low signal (a logic "0") is applied to the FSK switch 206, the switch 206 is open and the second capacitor (C2) 210 is not shorted. A high "tone" with frequency equal to f2 can also be transmitted. F2 is higher than f1 because the equivalent capacitance (CA) is (C1)(C2)/(C1 + C2) and this is less than C1. Consequently, f2 is greater than f1. The frequency deviation is f2-f1. These examples assume low signals are applied to the first frequency deviation selection switch 212 and the second frequency deviation selection switch 213.

[0028] If a smaller frequency deviation is desired, f1 remains the same since it is driven by C1. F2 is changed to a smaller value (f3) so the frequency deviation (f3-f1) is smaller than f2-f1. In particular, a high signal is applied to first frequency deviation selection switch 212, a low signal is applied to the second frequency deviation selection switch 213, and a low signal is applied to FSK switch 206. Then, the equivalent capacitance (CB) becomes C1/(C2 + C3). 1/CB= 1/C1 + 1/(C2 + C3)= (C2+C3)/C1(C2+C3) + C1/C1(C1(C2 + C3)= (C1 +C2 + C3)/C1C2+C1C3. Thus, CB= (C1C2+C1C3)/(C1 + C2 + C3). CB is greater than CA. Thus f3 (the new "High tone" frequency is less than f2. With the first frequency deviation being f2-f1, and the second deviation (with the addition of the capacitor bank being f3-f1, it can be appreciated that the second frequency deviation is less than the first frequency deviation. The fourth capacitor 216 may also be added to decrease the

deviation further. Alternatively, the third capacitor 214 may be switched out and the fourth capacitor 216 switched in to give another frequency deviation.

[0029] The controller 222 determines when to switch in or out third capacitor 214 (via line 220) and the fourth capacitor 216. In this example, the third capacitor 214 and the fourth capacitor 216 are located in the PLL 202. Similarly, controller 272 and line 270 in FIG. 2B provide frequency deviation selection.

[0030] Referring now to FIG. 2B and 2C, another example of a circuit 250 for changing FSK frequency deviation on the fly is described. The circuit 250 includes a phase locked loop (PLL) 252, a clock (e.g., crystal oscillator) 254, a FSK switch 256, a first capacitor (C1) 258, a second capacitor (C2) 260, a frequency deviation selection switch 262, and a third capacitor (C3) 264. C1, C2, C3 and C4 are the values of the capacitors.

[0031] The oscillator 252 oscillates at a certain frequency. If a high signal (a "1") is applied to the FSK switch 256, the switch 256 closes and the second capacitor (C2) 260 is shorted. A low "tone" with frequency equal to f1 is transmitted. If a low signal (a logic "0") is applied to the FSK switch 256, the switch 256 is open and the second capacitor (C2) 260 is not shorted. A high "tone" with frequency equal to f2 can also be transmitted. F2 is higher than f1 because the equivalent capacitance (CA) is (C1)(C2)/(C1 + C2) and this is less than C1. Consequently, f2 is greater than f1. The frequency deviation is f2-f1. These examples assume low signals are applied to the frequency deviation selection switch 262.

[0032] If a smaller frequency deviation is desired, f1 remains the same since it is driven by C1. F2 is changed to a smaller value (f3) so the frequency deviation (f3-f1) is smaller than f2-f1. In particular, a high signal is applied to frequency deviation selection switch 262, and a low signal is applied to FSK switch 256. Then, the equivalent capacitance (CB) becomes C1/(C2 + C3). 1/CB= 1/C1 + 1/(C2 + C3)= (C2+C3)/C1(C2+C3) + C1/C1(C1(C2 + C3)= (C1 +C2 + C3)/C1C2+C1C3. Thus, CB= (C1C2+C1C3)/(C1 + C2 + C3). CB is greater than CA. Thus f3 (the new "High tone" frequency is less than f2. With the first frequency deviation being f2-f1, and the second deviation (with the addition of the capacitor bank being f3-f1, it can be appreciated that the second frequency deviation is less than the first frequency deviation. Other capacitors may be added in parallel to the third capacitor (C3) 256 and as showed in the example of FIG. 2A.

[0033] As shown in both FIG. 2A and FIG. 2B, the PLL 202 and 252 provides a fixed frequency deviation. The first capacitor 208 or 258 (C1) is the load capacitor for the crystal oscillator 204 or 254 resulting in the lower carrier of the FSK signal. During the low carrier transmission, the FET (FSK switch) 206 or 256 shorts the second capacitor 210 or 260 (C2) to ground. For the high frequency carrier, the FET switch 206 or 256 is opened and the second capacitor 210 or 260 (C2) is in series with the first capacitor 208 or 258 (C1) creating a different load on the crystal and a different carrier transmission frequency.

[0034] Referring now to FIG. 3, one example of an approach for FSK switching is described. At step 302, it is determined if the protocol to transmit includes a high frequency deviation. For example, a threshold may be used and if the transmission protocol has a frequency deviation that exceeds this threshold then the step is answered in the affirmative. On the other hand, if the desired protocol falls below the threshold then the answer is negative.

[0035] If the answer at step 302 is affirmative, then at step 304 additional capacitors in parallel with a loading capacitor (e.g., the second capacitor 208 or 258 in FIG. 2A and FIG. 2B) are not switched in parallel with the loading capacitor. This action maintains a relatively high frequency deviation.

[0036] If the answer at step 302 is affirmative, then at step 306 additional capacitors in parallel with a loading capacitor (e.g., the second capacitor 208 or 258 in FIG. 2A and FIG. 2B) are switched in parallel with the loading capacitor. This action decreases a high frequency deviation. For example, if the center frequency is 315 +/- 20khz, this action may decrease the deviation to +/- 10khz. In this way, the approaches accommodate a frequency range that the receiver in the vehicle is expecting.

[0037] Referring now to FIG. 4, an apparatus 400 for transmitting tire pressuring monitoring system (TPMS) data includes an interface 402 and a controller 404. The interface 402 has an input 406 and an output 408.

[0038] The controller 404 is coupled to the interface 402. The controller 404 is configured to determine a protocol 416 to be used in the transmission and, based upon the protocol 416, selectively produce control signals 410 that alter the transmission frequency of a clock 412. The protocol 416 may be received from a memory 420 at the input 406. The

controller 404 is further configured to transmit TPMS data 414 according to the altered transmission frequency of the clock 412 at the output 408. The control signals 408 may control a control circuit 411 that actually changes the clock frequency.

[0039] Still referring to FIG. 4, a transmission 448 is shown and includes a first portion 450, a second portion 452, and a third portion 454. The first portion 450 is at a high frequency and represents a logic 1; the second portion 452 is at a lower frequency and represents a logic 0, and the third portion 454 is at the same high frequency as the first portion 450 and also represents a logic 1.

[0040] In the approaches described herein the range or deviation between high and low frequencies is altered on the fly based upon the protocol needed. For example, the difference between high frequency (of portions 450 and 454) and low frequency (portion 454) may need to be 20khz for some transmission protocols and 30khz for other protocols. As described herein, capacitors in a capacitor bank may be switched in or out of the transmission circuit. This switching of capacitors alters the "High tone" or high transmission frequency. Thus, if initially the low transmission frequency is f1, and the high transmission frequency is f2 (f2>f1), then the deviation is f2-f1. Inserting a capacitor into the transmission circuit changes f2 to f3 with f3<f2 and f1<f3. Thus, the second frequency deviation is f3-f1 and the second frequency deviation is less than the first frequency deviation.

[0041] As mentioned, the frequency deviation used can be selected according to the protocol used. By protocols, it is meant any parameter or group of parameters or characteristics that describes a transmission including, for example, data formats (e.g., positioning and meaning of bits), baud rates, to mention two examples. Other examples are possible.

[0042] It should be understood that any of the devices described herein (e.g., the programming or activation devices, PLLs, the wheel units, the controllers, the receivers, the transmitters, the sensors, any presentation devices, or the external devices) may use a computing device to implement various functionality and operation of these devices. In terms of hardware architecture, such a computing device can include but is not limited to a processor, a memory, and one or more input and/or output (I/O) device interface(s) that are communicatively coupled via a local interface. The local interface can include, for example but not limited to, one or more buses and/or other wired or wireless connections. The

processor may be a hardware device for executing software, particularly software stored in memory. The processor can be a custom made or commercially available processor, a central processing unit (CPU), an auxiliary processor among several processors associated with the computing device, a semiconductor based microprocessor (in the form of a microchip or chip set) or generally any device for executing software instructions.

[0043] The memory devices described herein can include any one or combination of volatile memory elements (e.g., random access memory (RAM), such as dynamic RAM (DRAM), static RAM (SRAM), synchronous dynamic RAM (SDRAM), video RAM (VRAM), and so forth)) and/or nonvolatile memory elements (e.g., read only memory (ROM), hard drive, tape, CD-ROM, and so forth). Moreover, the memory may incorporate electronic, magnetic, optical, and/or other types of storage media. The memory can also have a distributed architecture, where various components are situated remotely from one another, but can be accessed by the processor.

[0044] The software in any of the memory devices described herein may include one or more separate programs, each of which includes an ordered listing of executable instructions for implementing the functions described herein. When constructed as a source program, the program is translated via a compiler, assembler, interpreter, or the like, which may or may not be included within the memory.

[0045] It will be appreciated that any of the approaches described herein can be implemented at least in part as computer instructions stored on a computer media (e.g., a computer memory as described above) and these instructions can be executed on a processing device such as a microprocessor. However, these approaches can be implemented as any combination of electronic hardware and/or software.

[0046] Preferred embodiments of this invention are described herein, including the best mode known to the inventors for carrying out the invention. It should be understood that the illustrated embodiments are exemplary only, and should not be taken as limiting the scope of the invention.

WHAT IS CLAIMED IS:

1. A method for transmitting tire pressuring monitoring system (TPMS) data, comprising,

determining a protocol to be used in the transmission of tire pressure data from a transmitter;

based upon the protocol, selectively altering the transmission frequency of a clock used by the transmitter to transmit the tire pressure data, the altering effective to change a frequency deviation of the transmitter from a first deviation to a second deviation;

transmitting TPMS data according to the altered transmission frequency of the clock and according to the second frequency deviation.

2. The method of claim 1 wherein selectively altering comprises switching in or out selected ones of a plurality of capacitors that are coupled to the clock.

3. The method of claim 1 wherein the transmitting is performed according to a frequency-shift keying (FSK) approach.

4. The method of claim 1 wherein the protocol is a selected protocol from a plurality of protocol, each of the plurality of protocol associated with a different automobile manufacturer.

5. The method of claim 1 wherein the clock is a crystal oscillator.

6. The method of claim 1 wherein the steps are performed by a phase-locked loop (PLL).

7. The method of claim 1, wherein the steps are performed at a wheel unit.

8. An apparatus for transmitting tire pressuring monitoring system (TPMS) data, comprising,

an interface having an input and an output;

a controller coupled to the interface, the controller configured to determine a protocol to be used in the transmission, the controller configured to, based upon the protocol, selectively produce control signals that alter the transmission frequency of a clock, the controller configured to transmit TPMS data according to the altered transmission frequency of the clock at the output.

9. The apparatus of claim 8 wherein the control signals selectively switch in or out selected ones of a plurality of capacitors that are coupled to the clock.

10. The apparatus of claim 8 wherein the transmissions are performed according to a frequency-shift keying (FSK) approach.

11. The apparatus of claim 8 wherein the protocol is a selected protocol from a plurality of protocol, each of the plurality of protocol associated with a different automobile manufacturer.

12. The apparatus of claim 8 wherein the clock is a crystal oscillator.

13. The apparatus of claim 8 wherein the apparatus is disposed at a wheel unit.

13. A computer usable non-transitory medium having a computer readable program code embodied therein, said computer readable program code adapted to be executed to implement a method of transmitting tire pressure monitor information, the method comprising:

determining a protocol to be used in the transmission;

based upon the protocol, selectively altering the transmission frequency of a clock;

transmitting TPMS data according to the altered transmission frequency of the clock.

14. The computer medium of claim 13 wherein selectively altering comprises switching in or out selected ones of a plurality of capacitors that are coupled to the clock.

15. The computer medium of claim 13 wherein the transmitting is performed according to a frequency-shift keying (FSK) approach.

16. The computer medium of claim 13 wherein the protocol is a selected protocol from a plurality of protocol, each of the plurality of protocol associated with a different automobile manufacturer.

17. The computer medium of claim 13 wherein the clock is a crystal oscillator.

18 The computer medium of claim 13 wherein the steps are performed by a phase-locked loop (PLL).

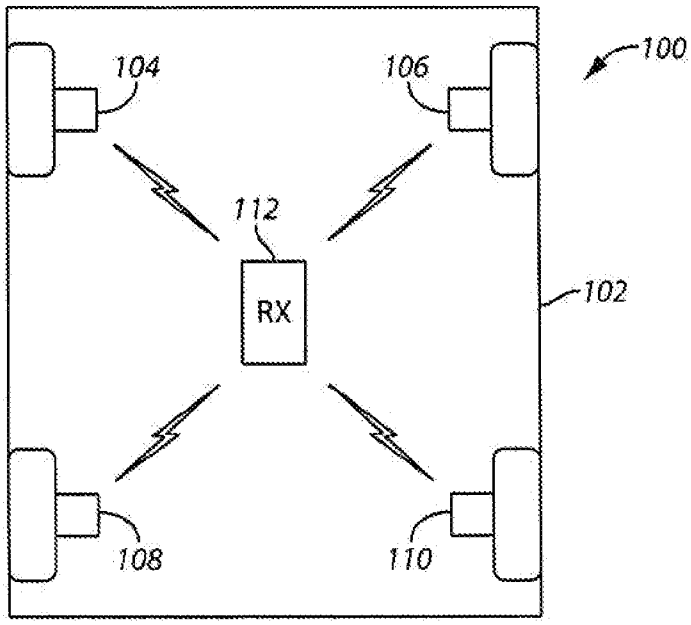

FIG. 1

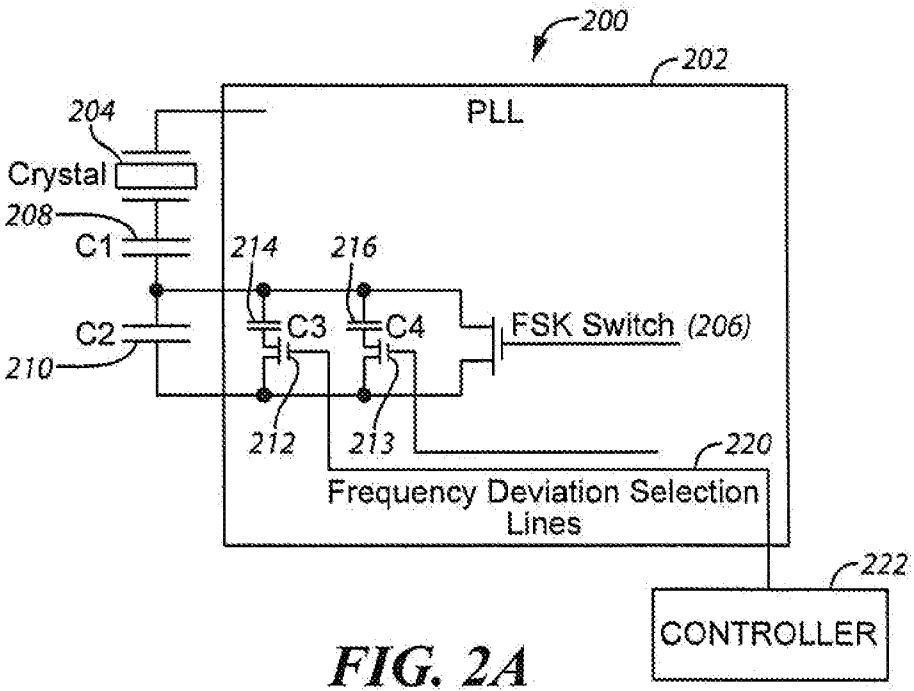
200
202
PLL
204
Crystal
208
C1
214
216
C2
210
C3
C4
FSK Switch (206)
212
213
220
Frequency Deviation Selection Lines
222
CONTROLLER

FIG. 2A

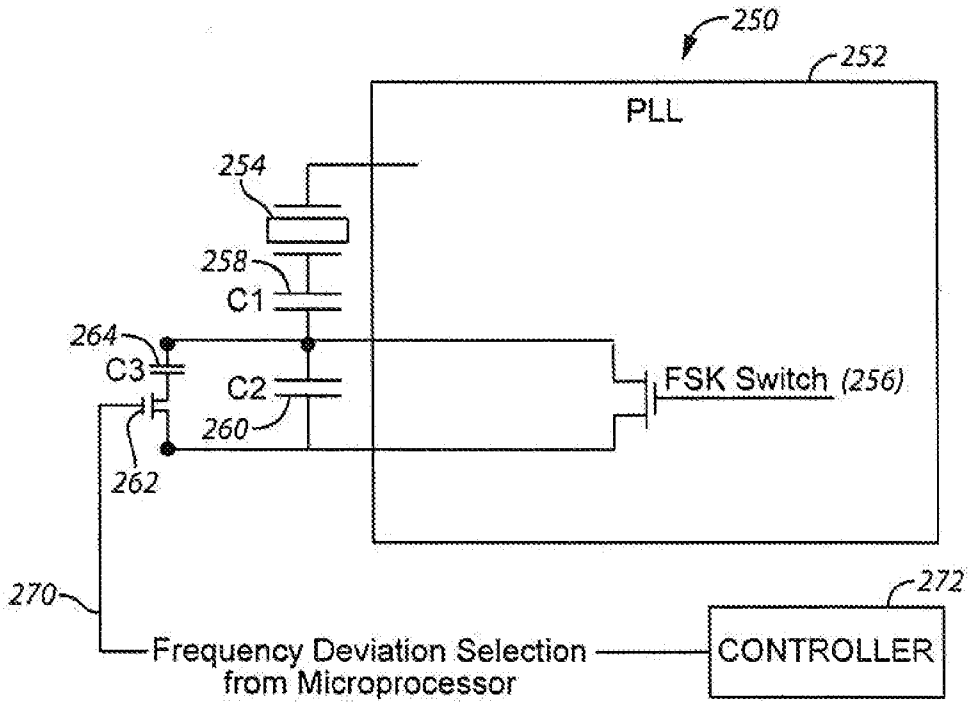
250
252
PLL
254
258
C1
264
C3
C2
260
262
FSK Switch (256)
270
272
Frequency Deviation Selection from Microprocessor
CONTROLLER

FIG. 2B

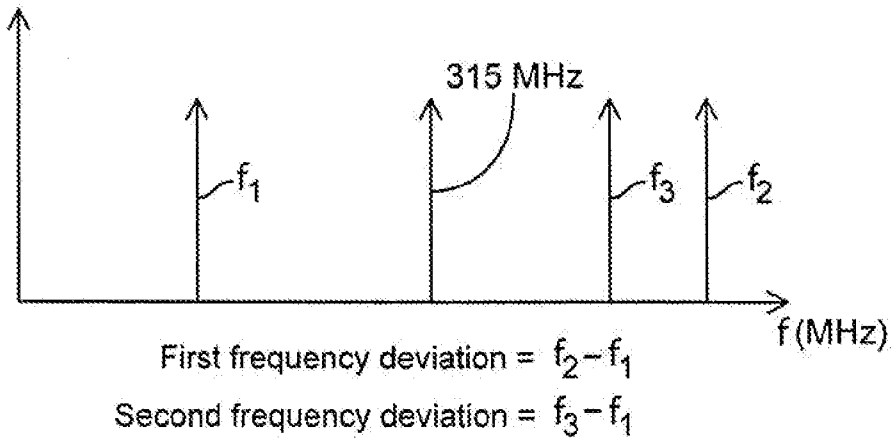
315 MHz
f1
f3
f2
f (MHz)
First frequency deviation = f2 − f1
Second frequency deviation = f3 − f1

FIG. 2C

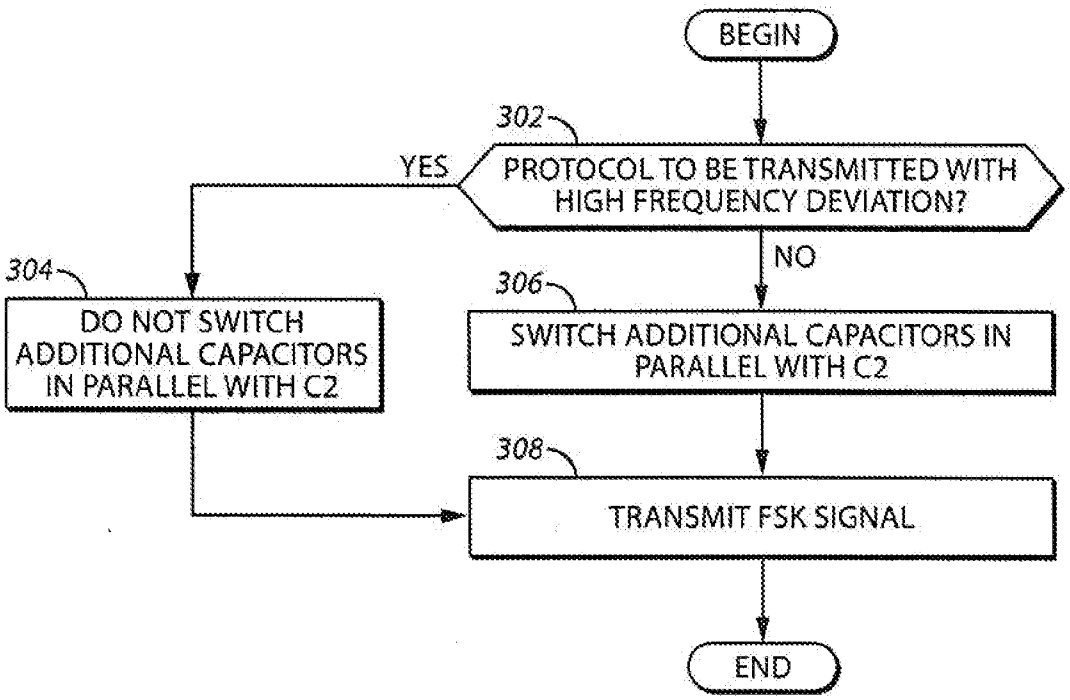
BEGIN
302
PROTOCOL TO BE TRANSMITTED WITH HIGH FREQUENCY DEVIATION?
YES
NO
304
DO NOT SWITCH ADDITIONAL CAPACITORS IN PARALLEL WITH C2
306
SWITCH ADDITIONAL CAPACITORS IN PARALLEL WITH C2
308
TRANSMIT FSK SIGNAL
END

FIG. 3

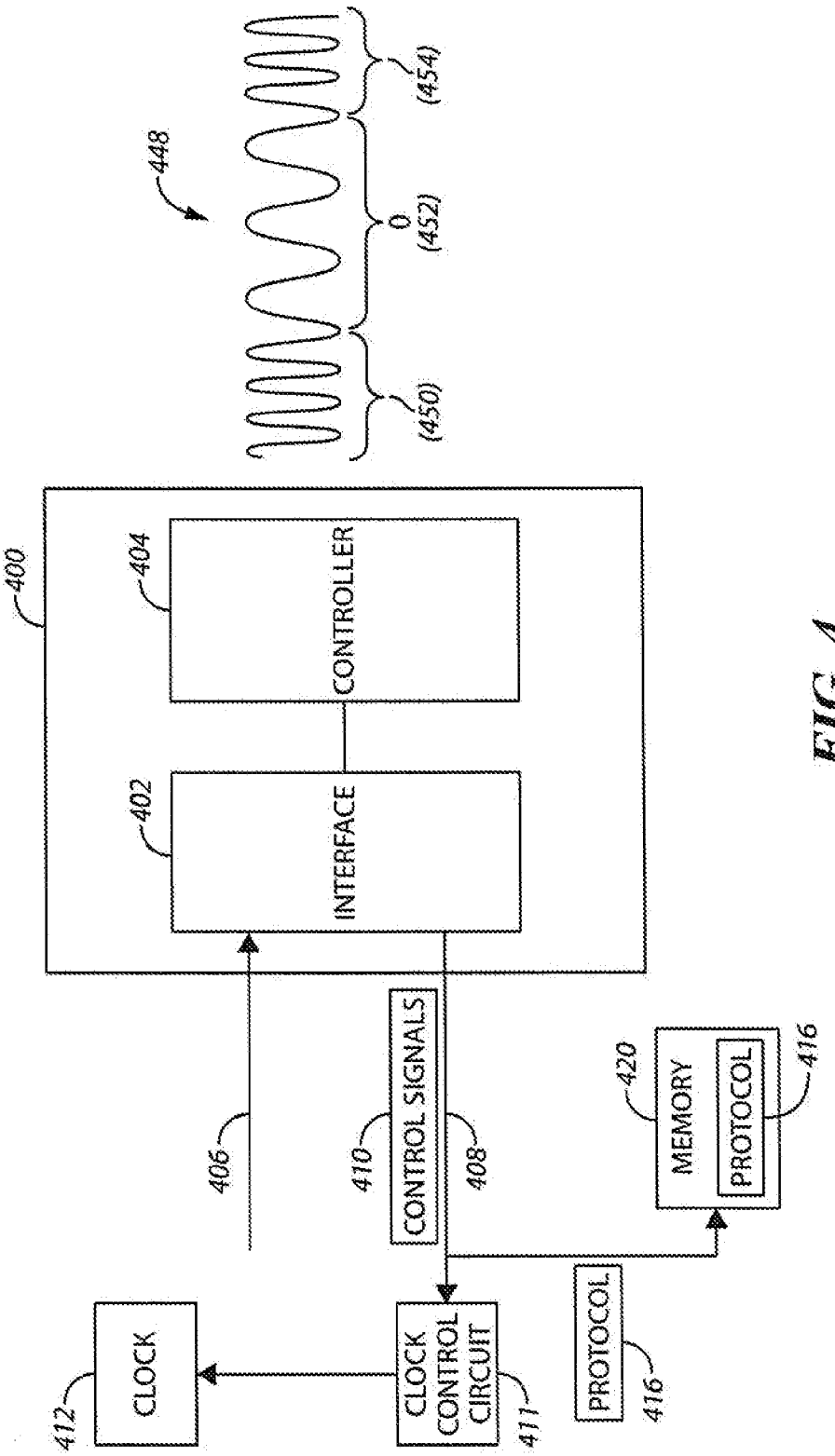
448
(454)
0
(452)
(450)
400
404
CONTROLLER
402
INTERFACE
406
410
CONTROL SIGNALS
408
420
MEMORY
PROTOCOL
416
412
CLOCK
CLOCK CONTROL CIRCUIT
411
PROTOCOL
416

FIG. 4

INTERNATIONAL SEARCH REPORT

International application No
PCT/US2015/016176

A. CLASSIFICATION OF SUBJECT MATTER
INV. B60C23/04
ADD.

According to International Patent Classification (IPC) or to both national classification and IPC

B. FIELDS SEARCHED

Minimum documentation searched (classification system followed by classification symbols)
B60C

Documentation searched other than minimum documentation to the extent that such documents are included in the fields searched

Electronic data base consulted during the international search (name of data base and, where practicable, search terms used)
EPO-Internal, WPI Data

C. DOCUMENTS CONSIDERED TO BE RELEVANT

Category*	Citation of document, with indication, where appropriate, of the relevant passages	Relevant to claim No.
X	EP 2 272 688 A2 (BRIDGESTONE AMERICAS TIRE OPERATIONS LLC [US] BRIDGESTONE AMERICAS TIR) 12 January 2011 (2011-01-12) the whole document paragraph [0125]; figure 17 -----	1-18
X	"Atmel Fractional-N PLL Transmitter IC", , 1 August 2011 (2011-08-01), pages 1-26, XP055154625, 2325 Orchard Parkway, San Jose, CA 95131 USA Retrieved from the Internet: URL:www.atmel.com [retrieved on 2014-11-24] the whole document -----	1,8,13

☐ Further documents are listed in the continuation of Box C.

☒ See patent family annex.

* Special categories of cited documents :

"A" document defining the general state of the art which is not considered to be of particular relevance

"E" earlier application or patent but published on or after the international filing date

"L" document which may throw doubts on priority claim(s) or which is cited to establish the publication date of another citation or other special reason (as specified)

"O" document referring to an oral disclosure, use, exhibition or other means

"P" document published prior to the international filing date but later than the priority date claimed

"T" later document published after the international filing date or priority date and not in conflict with the application but cited to understand the principle or theory underlying the invention

"X" document of particular relevance; the claimed invention cannot be considered novel or cannot be considered to involve an inventive step when the document is taken alone

"Y" document of particular relevance; the claimed invention cannot be considered to involve an inventive step when the document is combined with one or more other such documents, such combination being obvious to a person skilled in the art

"&" document member of the same patent family

Date of the actual completion of the international search	Date of mailing of the international search report
6 May 2015	12/05/2015

Name and mailing address of the ISA/	Authorized officer
European Patent Office, P.B. 5818 Patentlaan 2 NL - 2280 HV Rijswijk Tel. (+31-70) 340-2040, Fax: (+31-70) 340-3016	Gaillard, Alain

INTERNATIONAL SEARCH REPORT

Information on patent family members

International application No
PCT/US2015/016176

Patent document cited in search report	Publication date	Patent family member(s)	Publication date
EP 2272688 A2	12-01-2011	AT 478772 T	15-09-2010
		AT 543669 T	15-02-2012
		AU 8082301 A	05-02-2002
		AU 2001280823 B2	12-01-2006
		AU 2005244491 A1	12-01-2006
		AU 2005244492 A1	12-01-2006
		AU 2005244493 A1	12-01-2006
		AU 2005244494 A1	12-01-2006
		AU 2005244495 A1	12-01-2006
		AU 2005244496 A1	12-01-2006
		AU 2005244497 A1	12-01-2006
		AU 2005244498 A1	12-01-2006
		AU 2005244499 A1	12-01-2006
		BR 0112781 A	30-09-2003
		CA 2417430 A1	31-01-2002
		CA 2676101 A1	31-01-2002
		CA 2676102 A1	31-01-2002
		CA 2743631 A1	31-01-2002
		EP 1309460 A2	14-05-2003
		EP 2113402 A2	04-11-2009
		EP 2263889 A1	22-12-2010
		EP 2272688 A2	12-01-2011
		EP 2272689 A2	12-01-2011
		EP 2842771 A1	04-03-2015
		ES 2348658 T3	10-12-2010
		ES 2381940 T3	01-06-2012
		ES 2525412 T3	22-12-2014
		JP 5099532 B2	19-12-2012
		JP 5140790 B2	13-02-2013
		JP 2004526217 A	26-08-2004
		JP 2011225215 A	10-11-2011
		JP 2011248903 A	08-12-2011
		JP 2011254481 A	15-12-2011
		JP 2015027877 A	12-02-2015
		MX PA03000674 A	01-11-2004
		PE 02282003 A1	18-03-2003
		US 2002126005 A1	12-09-2002
		US 2004017291 A1	29-01-2004
		WO 0207993 A2	31-01-2002